Operator-Centered Design of Ship Systems

Undersea Human/Systems Integration Symposium

May 3-5, 2004

Dr. Susan Chipman
ONR Code 342
703-696-4318
chipmas@onr.navy.mil

COGNITIVE SCIENCE

The Problem: Navy is a high tech enterprise placing extreme demands on human learners and performers

ONR Cognitive Science: Computational Modeling of the Human Operator

COGNITIVE SCIENCE

Special computer languages that integrate & embody what we have learned from 100 years of psychological research.

Example --

The EPIC Model of Human Cognitive Architecture:

Separate perceptual, cognitive & motor systems, operating in parallel

Task strategies are production rules (if-then) executed by cognitive processor

Cognitive processor allows parallel processing, overlap of different task aspects

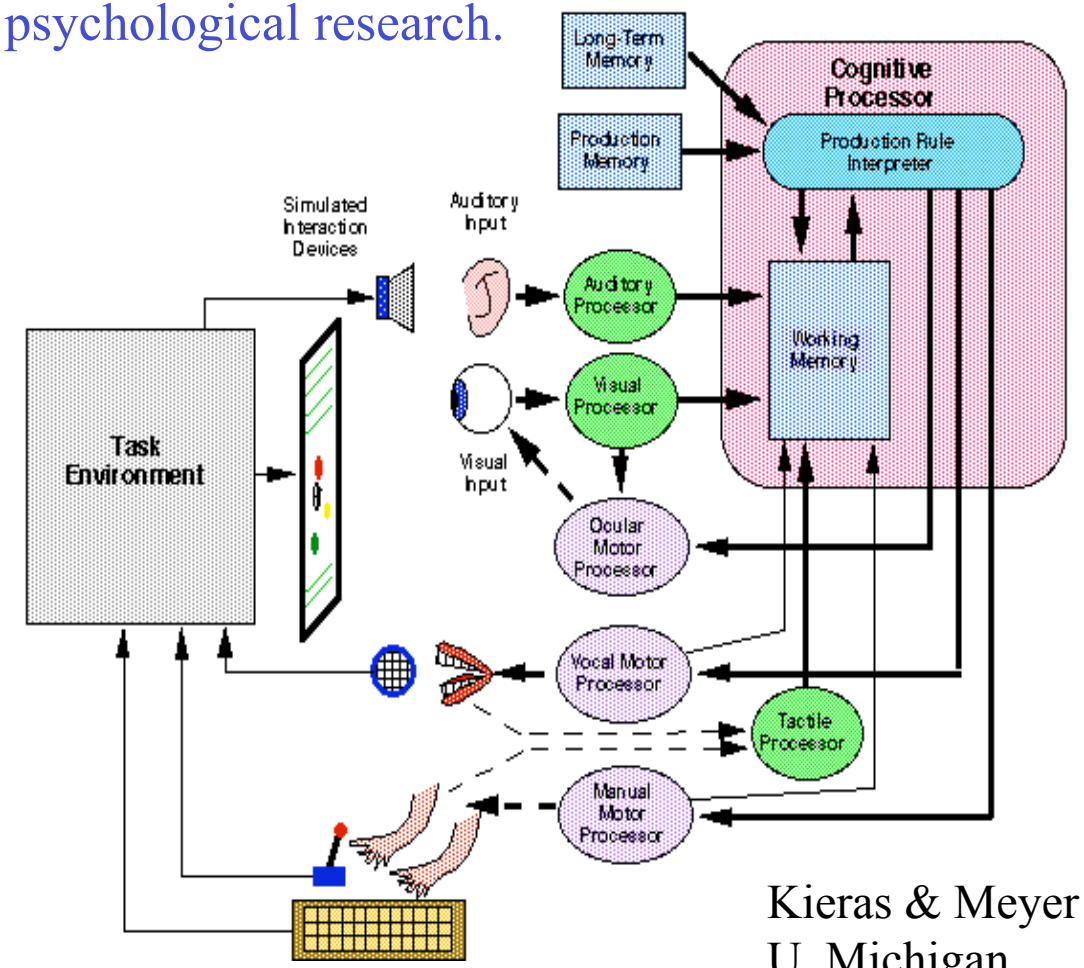

Kieras & Meyer
U. Michigan

Cognitive Architectural "Languages" Enable Important Military Applications

- Challenge of designing new systems
- Challenge of developing training for systems that do not yet exist

- If you can write the program for an operator skill in a cognitive architectural language,
  - You can perform evaluative analyses of designs before even prototypes are built
  - Including estimations of operator cognitive workload
  - Develop an intelligent tutor for the operator without doing a cognitive task analysis of non-existent expertise

Engineering Model Approach to Ensuring Usability

- **Use model predictions instead of user testing**
  - Describe interface design in detail
  - Build a model of the user doing the task
  - Use the model to predict execution or learning time, cognitive workload
  - Revise or choose design based on predictions
- **Get usability results before building prototype**
- **Engineering model allows more design iterations**
- **Summarizes interface design from operator POV**
- **Not yet able to model all aspects – empirical user testing remains an important check**

COGNITIVE SCIENCE

Why do this?
The Tomahawk Story

- Long ago, Glen Osga of SPAWAR Systems Center did a GOMS analysis of a proposed new launch system for the Tomahawk missile.
- He predicted that the launch process would take too much time to meet the requirement.
- The messenger was killed. The study was locked deep in a safe.
- Years later, the system failed its acceptance test.
- Still later, the officer assigned to investigate the reason why just happened to be attending a workshop where Osga mentioned having done the GOMS analysis.
- His final report recommended that GOMS analyses be done on all proposed new systems.

GOMS:
User GOALS
Operators
Methods: sequence of operators
Selection rules for methods

Bracketing Approach to the Problem of Unknown Strategies

- Determine the fastest possible strategy, given the constraints of the human perceptual/cognitive/motor architecture: often eyes or even the head must move to see vital information; hands cannot type and move a mouse at the same time.
- Determine the slowest reasonable strategy that meets the mandatory requirements of the task but does not involve much overlapping or parallel processing.
- Assume that actual operator performance will lie in between.

Bottom Line

- If the fastest possible strategy isn't fast enough, the Tomahawk case, you have a serious design problem. Note that predicting the fastest possible time will usually require modeling approaches more sophisticated than traditional GOMS, allowing for overlapping parallel processing, where it is humanly possible.
- A comfortable margin is desirable: people usually will not choose to work at maximum possible speed, especially in prolonged operations.

COGNITIVE SCIENCE

Like Bridge Design --

- **Modeling involves significant effort**
  - Developing and representing detail of the design
  - Good interface design means getting the details right
  - Details should be designed, not left up to the programmers

Vision for the Future

COGNITIVE SCIENCE

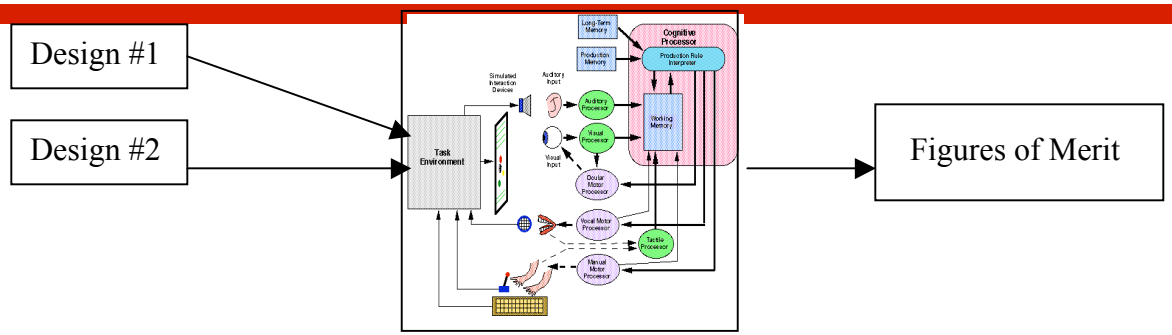

- Today --
  - Cognitive modeling approaches compare alternative designs, predict human/system combined performance
  - Not yet used in DoD systems on any significant scale
- Tomorrow --
  - Predictive evaluation of wider range of systems routine
  - Tools developed to reduce the labor
  - More strongly validated and more complete models of human perceptual/cognitive/motor architecture
  - Invert the complicated function used in evaluation -- the human cognitive model -- to generate optimal designs

To Learn More

- ONR Sponsored Virtual Workshop Planned
  - Please send email addresses for notification to chipmas@onr.navy.mil
- Proposed workshop for (July 29-Aug 1) International Conference on Cognitive Modeling http://simon.lrdc.pitt.edu/~iccm/
  - Opportunity to see working models
- ACT-R Summer School at CMU– two week introduction to the most popular cognitive modeling system – http://act-r.psy.cmu.edu/workshops/workshop-2004/summerschool_2004_announce.htm
- Request a copy of: S.F. Chipman & D.E. Kieras (2004) Operator Centered Design of Ship Systems. In: Proceedings of *Engineering the Total Ship Symposium, 2004*. Held at NIST, Gaithersburg, MD March 17-18, 2004, organized by the American Society of Naval Engineers.