US005828625A

United States Patent [19]

Costa

[11] Patent Number: 5,828,625

[45] Date of Patent: Oct. 27, 1998

[54] **ECHO SIMULATOR FOR ACTIVE SONAR**

[75] Inventor: **David R. Costa**, Taunton, Mass.

[73] Assignee: **The United States of America as represented by the Secretary of the Navy**, Washington, D.C.

[21] Appl. No.: **954,884**

[22] Filed: **Oct. 9, 1997**

[51] **Int. Cl.**[6] **H04B 17/00**

[52] **U.S. Cl.** **367/13**

[58] **Field of Search** 367/13; 434/6, 434/7

[56] **References Cited**

U.S. PATENT DOCUMENTS

4,250,634	2/1981	Buckler	367/13
4,908,800	3/1990	Dilemmo	367/13
4,972,379	11/1990	Harris, Jr.	367/13
4,972,381	11/1990	Mitchell et al.	367/13

Primary Examiner—Daniel T. Pihulic
Attorney, Agent, or Firm—Michael J. McGowan; Robert W. Gauthier; Prithvi C. Lall

[57] **ABSTRACT**

A target echo simulator with reverberation and ambient noise for testing an active sonar system. A transmit enable pulse from a sonar transmitter establishes a sequence of operations in which a target echo generator, reverberation generator and ambient noise generator produce a composite signal. The target echo generator produces a pulse modulated output pulse of a characteristic sonar frequency. The reverberation generator produces an amplitude modulating or envelope controlled output at a frequency of a carrier that is offset from the target echo carrier frequency. An ambient noise generator constantly produces ambient noise. A summing amplifier combines the generated signals to produce a composite signal for transfer to a receive connection on the active sonar system.
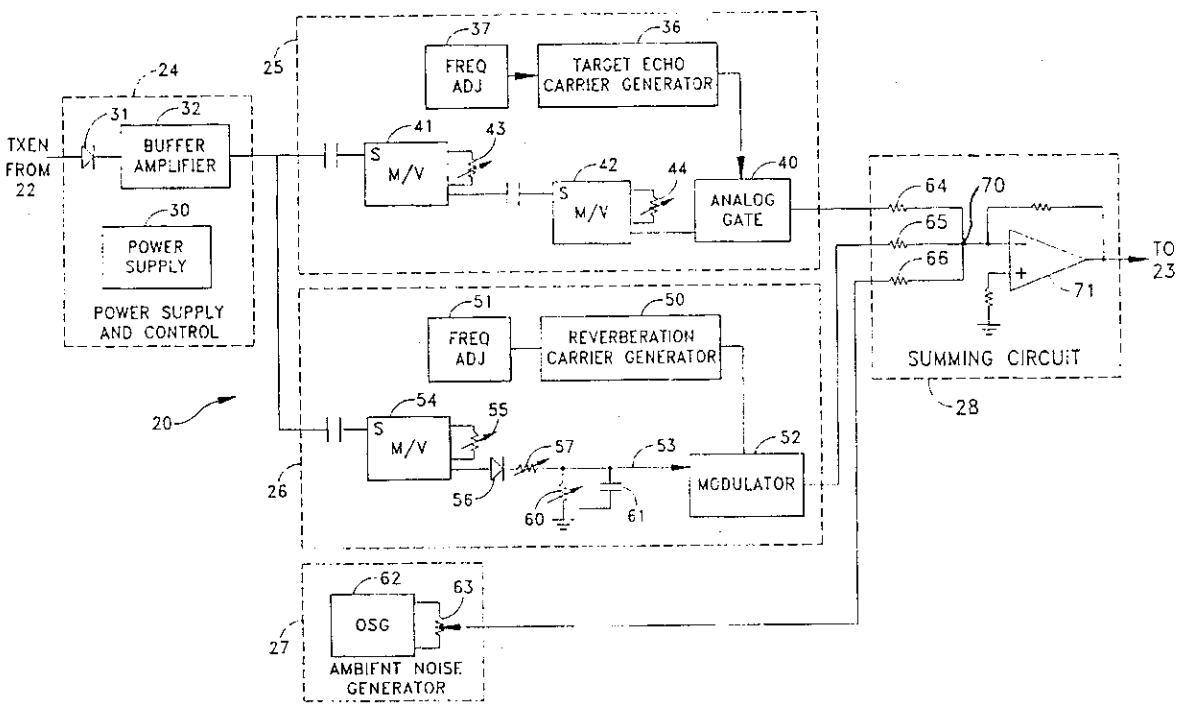
14 Claims, 4 Drawing Sheets