US005617869A

# United States Patent [19]

**Austin et al.**

[11] **Patent Number: 5,617,869**

[45] **Date of Patent: Apr. 8, 1997**

[54] **DEVICE AND METHOD FOR LOCATING FLOW BLOCKAGE IN A THREE-DIMENSIONAL OBJECT**

[75] Inventors: **Stephen A. Austin**, Amston; **Andrew J. Hull**, New London; **Norman L. Owsley**, Gales Ferry; **Mark S. Peloquin**, New London, all of Conn.

[73] Assignee: **The United States of America as represented by the Secretary of the Navy**, Washington, D.C.

[21] Appl. No.: **491,385**

[22] Filed: **Jun. 16, 1995**

[51] **Int. Cl.**[6] ..... **A61B 5/02**

[52] **U.S. Cl.** ..... **128/691**; 128/672; 128/675; 128/677; 128/687

[58] **Field of Search** ..... 128/672, 675, 128/677, 687, 691

[56] **References Cited**

U.S. PATENT DOCUMENTS

4,802,488 2/1989 Eckerle ..... 128/672

5,005,581 4/1991 Honeyager ..... 128/672 X

5,396,895 3/1995 Takashima et al. ..... 128/672 X

*Primary Examiner*—Lee S. Cohen

*Assistant Examiner*—Stephen D. Huang

*Attorney, Agent, or Firm*—Michael J. McGowan; James M. Kasischke; Prithvi C. Lall

[57] **ABSTRACT**

A method and apparatus for locating artery stenoses in blood vessels includes providing an array of sensors on skin surface to acquire data for detecting, locating and analyzing energy emissions in three-dimensional objects. The array detects momentum transfer that exists in the object in the form of wave energy, and the detection is designed to occur on the surface of the object, thereby providing a non-intrusive method for locating artery stenoses, with localization of the artery stenoses being achieved through array signal processing by information detected on the surface of the skin with the plurality or array of sensors.
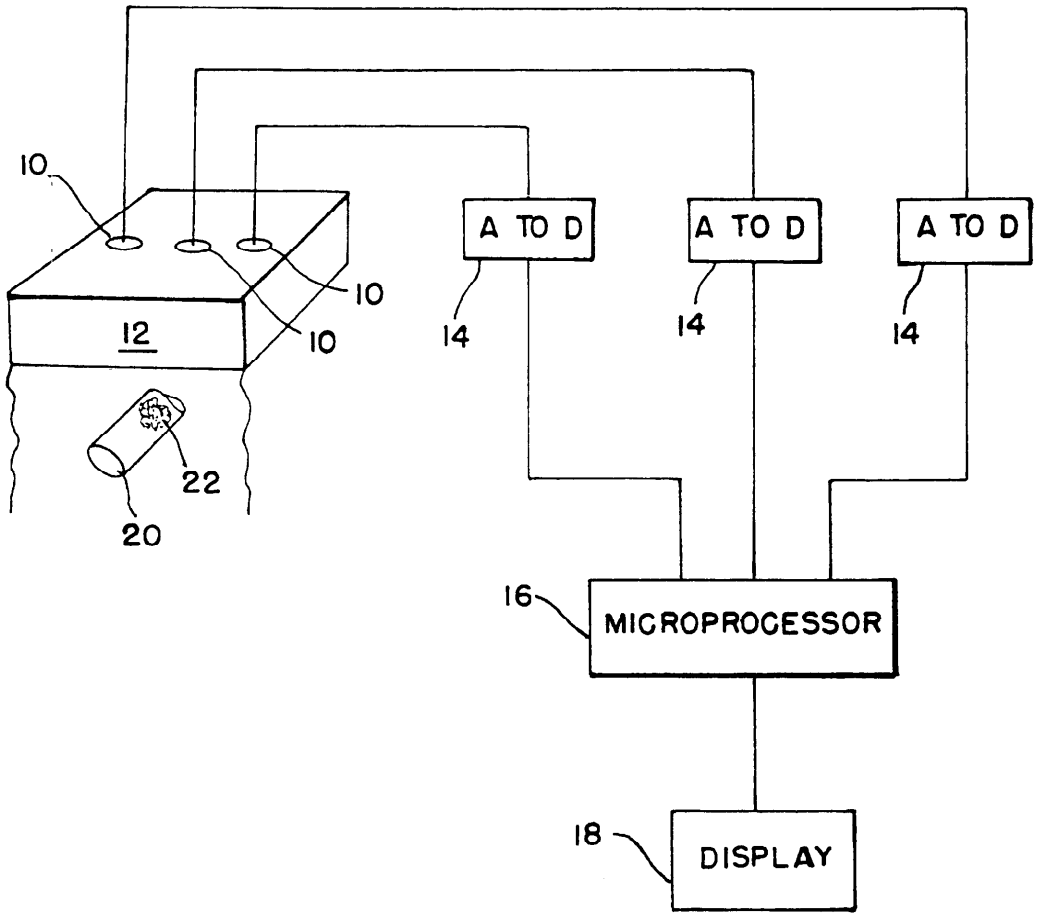
**18 Claims, 1 Drawing Sheet**