N.C. 70346

US005416977A

United States Patent [19]

Striffler

[11] Patent Number: 5,416,977

[45] Date of Patent: May 23, 1995

[54] PITCH SENSOR SYSTEM

[75] Inventor: Foster L. Striffler, New London, Conn.

[73] Assignee: The United States of America as represented by the Secretary of the Navy, Washington, D.C.

[21] Appl. No.: 217,511

[22] Filed: Mar. 24, 1994

[51] Int. Cl.[6] G01C 9/06

[52] U.S. Cl. 33/366; 33/377

[58] Field of Search 33/366, 377, 390; 340/689

[56] References Cited

U.S. PATENT DOCUMENTS

2,936,411	5/1960	Doty	33/366
3,487,303	12/1969	Remington	33/366
4,624,140	11/1986	Ekchian et al.	33/366
4,800,542	1/1989	Franklin et al.	33/366

FOREIGN PATENT DOCUMENTS

0053810	3/1985	Japan	33/366
0120214	5/1988	Japan	33/366
0142315	6/1991	Japan	33/390
8105592	7/1983	Netherlands	33/366
2211942	7/1989	United Kingdom	33/366
1137298	1/1985	U.S.S.R.	33/366

Primary Examiner—Thomas B. Will
Attorney, Agent, or Firm—Michael J. McGowan; Prithvi C. Lall; Michael F. Oglo

[57] ABSTRACT

A very small pitch sensor which accurately measures angular rotation about the pitch axis while being substantially insensitive to angular rotations about the roll or yaw axes. The pitch sensor comprises a spherical cavity that is fluid filled. The fluid fill further comprises one half conductive fluid and one half dielectric fluid. The fluids are selected to be immiscible and of different densities. The inside of the spherical cavity is segmented into three surface areas for connection to an electronic circuit. The electronic circuit measures voltage differentials between the segmented surface areas which vary with the conductive fluid surface in contact with the respective segmented areas. The conductive fluid surface contact area varies with the angular rotation of the cavity and about the pitch axis.
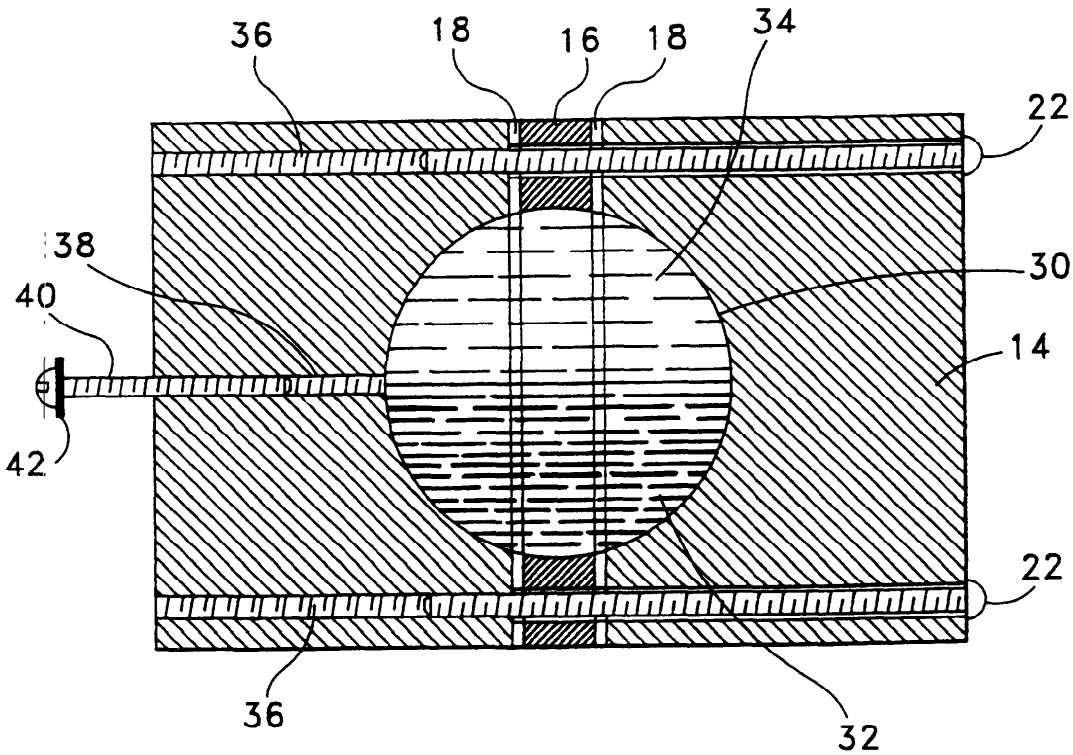
13 Claims, 4 Drawing Sheets