N.C. 74912

US005366198A

# United States Patent [19]

Dickinson

[11] Patent Number: 5,366,198

[45] Date of Patent: Nov. 22, 1994

[54] VIBRATION ISOLATION MOUNT WITH LOCKING MEANS

[75] Inventor: Stuart C. Dickinson, Bristol, R.I.

[73] Assignee: The United States of America as represented by the Secretary of the Navy, Washington, D.C.

[21] Appl. No.: 37,878

[22] Filed: Mar. 29, 1993

[51] Int. Cl.[5] ..... F16M 13/00

[52] U.S. Cl. ..... 248/550; 248/603; 248/632; 248/638; 267/136; 267/292

[58] Field of Search ..... 248/560, 603, 632, 638, 248/673, 675, 550, 614; 267/140.13, 140.14, 136, 292

[56] References Cited

U.S. PATENT DOCUMENTS

| | | | |
|---|---|---|---|
| 3,145,012 | 8/1964 | Kfoury | 248/638 X |
| 4,080,998 | 3/1978 | Mottola et al. | 248/560 X |
| 4,406,592 | 9/1983 | Kropiwnicki | 248/560 X |
| 4,919,402 | 4/1990 | Doi | 267/140.14 |
| 5,029,823 | 7/1991 | Hodgson | 267/140.14 |
| 5,209,326 | 5/1993 | Harper | 248/550 X |
| 5,238,232 | 8/1993 | Kobayashi et al. | 267/136 X |

*Primary Examiner*—Ramon O. Ramirez
*Attorney, Agent, or Firm*—Michael J. McGowan; Prithvi C. Lall; Michael R. Oglo

[57] ABSTRACT

A vibration isolation mount comprises a frame adapted for attachment to a support member, a spring device mounted on the frame and adapted for attachment to a protected device, the spring device being movable on the frame to permit movement of the protected device relative to the support member, and a locking mechanism for limiting movement of the spring device on the frame, thereby to limit movement of the protected device relative to the support member.
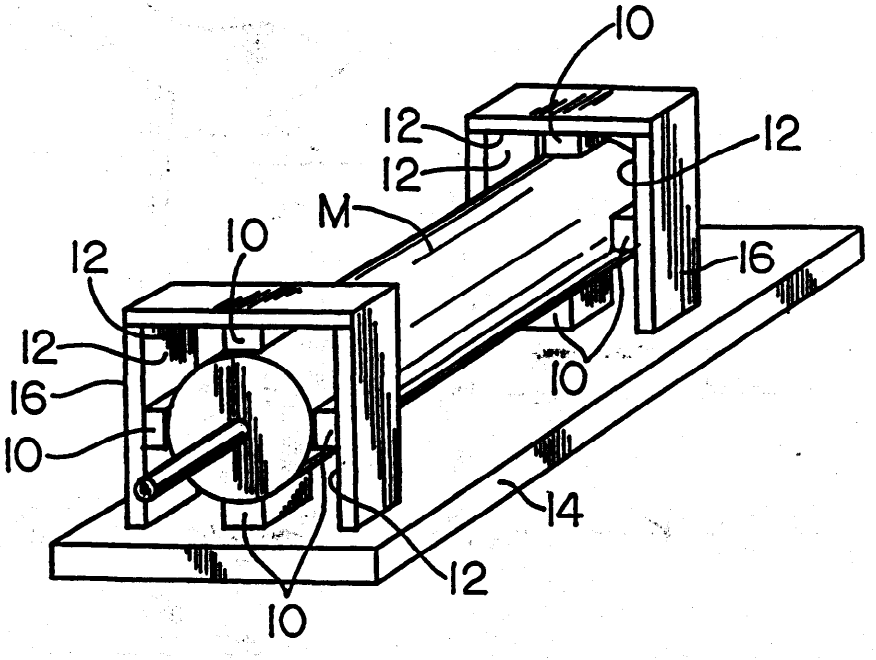
11 Claims, 2 Drawing Sheets