N.C. 74062

US005200572A

United States Patent [19]

Bissonnette et al.

[11] Patent Number: 5,200,572

[45] Date of Patent: Apr. 6, 1993

[54] ELLIPITCAL ELASTOMERIC IMPULSE ENERGY STORAGE AND TRANSFER SYSTEM

[75] Inventors: Laurent C. Bissonnette, Narragansett; Scott D. Boyd, Portsmouth; Jeffrey R. Milburn, Providence, all of R.I.

[73] Assignee: The United States of America as represented by the Secretary of the Navy, Washington, D.C.

[21] Appl. No.: 910,044

[22] Filed: Jul. 8, 1992

[51] Int. Cl.[5] B63G 8/28; F41F 3/10

[52] U.S. Cl. 89/1.81; 114/238; 124/73

[58] Field of Search 114/238, 316, 319, 318; 89/1.809, 1.81; 124/73, 71, 72; 42/1.14

[56] References Cited

U.S. PATENT DOCUMENTS

1,656,249	1/1928	Techel	114/238
2,546,961	4/1951	Amero	114/238
3,075,301	1/1963	Fiedler et al.	89/1.81
3,516,380	6/1970	Johnston	114/238
4,523,538	6/1985	Hollmann et al.	114/238
4,848,210	7/1989	Bissonnette	89/1.81

Primary Examiner—David H. Brown

Attorney, Agent, or Firm—Michael J. McGowan; Prithvi C. Lall; Michael F. Oglo

[57] ABSTRACT

An elastomeric impulse energy storage and transfer system comprising an accumulator body of elastomeric material, the body having an opening at a base portion thereof, the body having in elevation a frusto-ellipsoidal configuration, and the body taken along a sectional plane parallel with the base portion having an ellipsoidal configuration, the body being adapted to receive and discharge fluid through the opening, the body being expandable and contractible in response to receiving and discharging, respectively, the fluid, the body being adapted to retain the frusto-ellipsoidal and ellipsoidal configurations when in an expanded condition, and a submarine projectile launch system having the accumulator body as a component thereof.
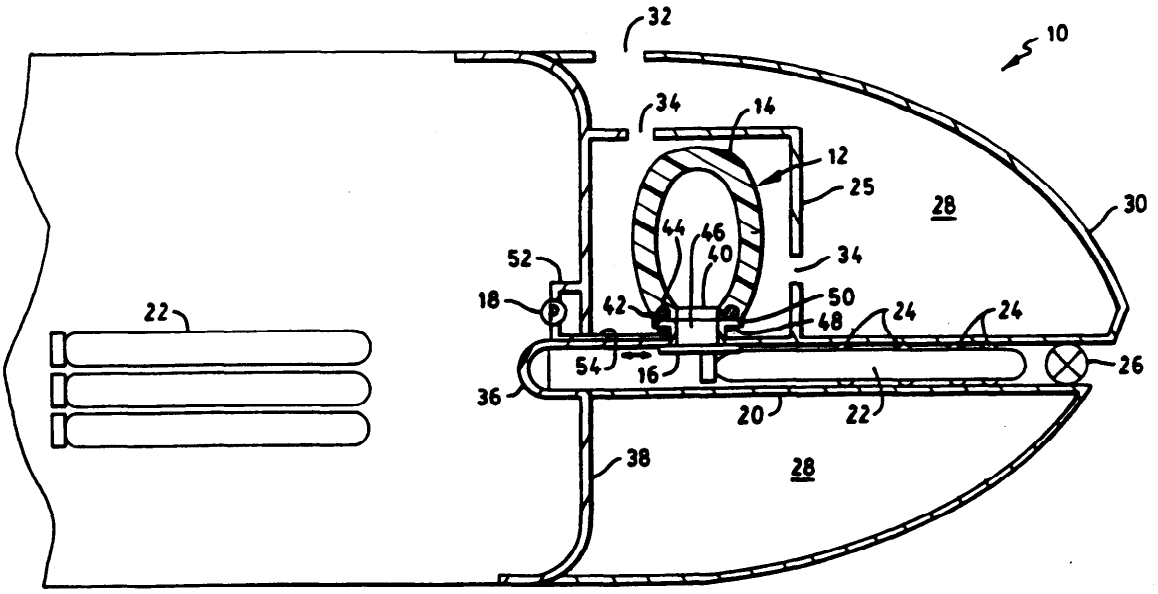
6 Claims, 5 Drawing Sheets