N.C. 76862

US005468913A

United States Patent [19]

Seaman et al.

[11] **Patent Number: 5,468,913**

[45] **Date of Patent: Nov. 21, 1995**

[54] **ELECTRO-OPTICAL COAXIAL TOW CABLE**

[75] Inventors: **Peter E. Seaman**, Niantic; **Thomas R. Stottlemyer**, Mystic, both of Conn.

[73] Assignee: **The United States of America as represented by the Secretary of the Navy**, Washington, D.C.

[21] Appl. No.: **387,000**

[22] Filed: **Feb. 9, 1995**

Related U.S. Application Data

[63] Continuation of Ser. No. 110,256, Aug. 19, 1993, abandoned.

[51] **Int. Cl.**[5] **G02B 6/44**; H01B 7/18; H02G 3/00

[52] **U.S. Cl.** ..... **174/102 R**; 174/96; 174/97; 385/101; 385/104; 385/107

[58] **Field of Search** ..... 174/95, 96, 97, 174/98, 102 R, 103, 104, 108; 385/101, 104, 107

[56] **References Cited**

U.S. PATENT DOCUMENTS

4,118,594	10/1978	Arnaud .	
4,141,623	2/1979	Dubost .	
4,156,104	5/1979	Mondello	174/70 R
4,158,478	6/1979	D'Auria .	
4,359,598	11/1982	Dey	174/40 R
4,422,889	12/1983	Trezeguet	156/70
4,484,963	11/1984	Anctil	156/56
4,548,664	10/1985	Canivet	156/166
4,623,218	11/1986	Laurette .	
4,671,611	6/1987	Allemand	350/96.23
5,224,190	6/1993	Chu	385/107
5,274,725	12/1993	Bottoms	385/105

FOREIGN PATENT DOCUMENTS

2501407	9/1982	France	385/101
53-16887	2/1978	Japan	385/101
54-1643	8/1979	Japan	385/101
57-5010	1/1982	Japan	385/101
2227855	8/1990	United Kingdom	385/101

Primary Examiner—Michael W. Phillips
Assistant Examiner—Stephen T. Ryan
Attorney, Agent, or Firm—Michael J. McGowan; Prithvi C. Lall; Michael F. Oglo

[57] **ABSTRACT**

A marine tow cable has both coaxial electronic and fiber optic data transmission capabilities wherein the coaxial core conductors are positioned at the neutral axis or center line of the cable with the coaxial shield conductor circumscribing a dielectric material therebetween. Embedded within the dielectric material matrix, separating the core conductors and the shield conductor, are fiber optic transmitters helically circumscribing the core conductors. Surrounding the electro-optical assembly is a watertight jacket and a protective armor cover to carry the tensile forces imparted to the cable during towing operations.
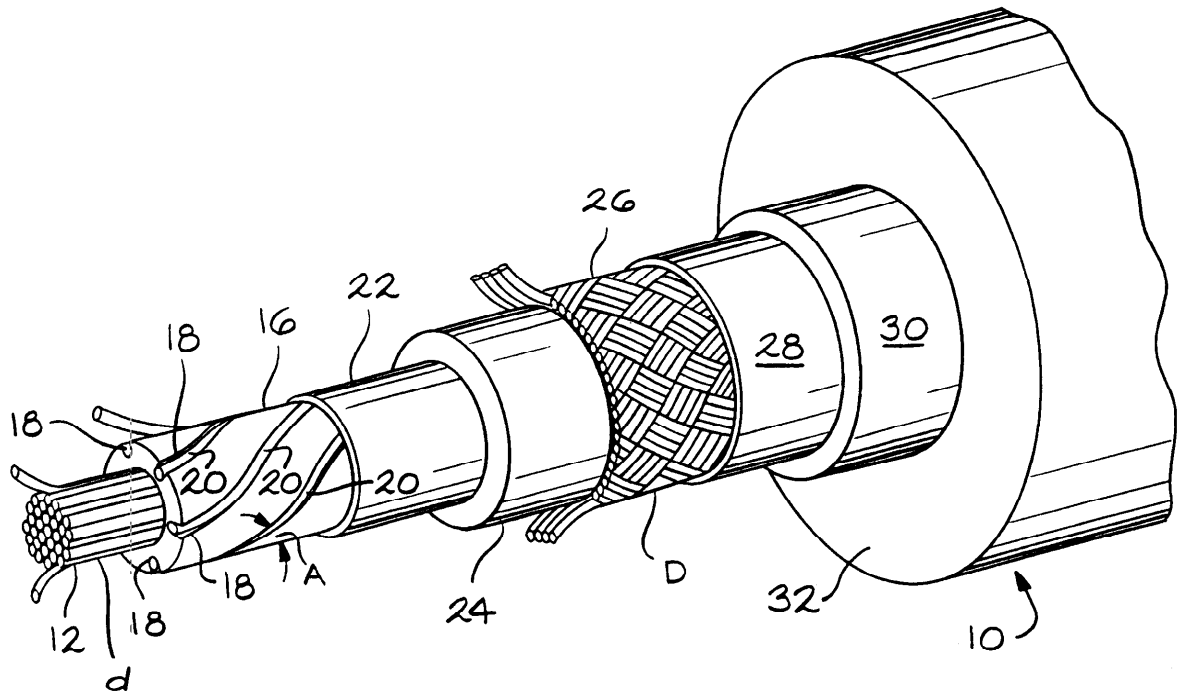
4 Claims, 4 Drawing Sheets