N.C. 74885

US005513526A

United States Patent [19]

Lefebvre et al.

[11] **Patent Number: 5,513,526**

[45] **Date of Patent: May 7, 1996**

[54] **HYDROFOIL FORCE BALANCE**

[75] Inventors: **Paul J. Lefebvre**, Tiverton; **William P. Barker**, Bristol, both of R.I.

[73] Assignee: **The United States of America as represented by the Secretary of the Navy**, Washington, D.C.

[21] Appl. No.: **279,037**

[22] Filed: **Jul. 20, 1994**

[51] **Int. Cl.**[6] **G01L 5/16**; G01M 9/00

[52] **U.S. Cl.** **73/147**; 73/802; 73/861.71

[58] **Field of Search** 73/862.05, 818, 73/802, 768, 832, 861.71, 147

[56] **References Cited**

U.S. PATENT DOCUMENTS

2,885,891	5/1959	Wilson et al.	73/147
3,019,643	2/1962	Curry	73/147
3,460,383	8/1969	Padera	73/147
3,552,201	1/1971	Horanoff	73/147
4,019,375	4/1977	Ellis et al.	73/802
4,534,216	8/1985	Fasano et al.	73/147
4,682,494	7/1987	Reed	73/147
5,056,361	10/1991	Roberts	73/147
5,201,218	4/1993	Mole	73/147

Primary Examiner—Richard Chilcot
Assistant Examiner—George M. Dombroske
Attorney, Agent, or Firm—Michael J. McGowan; Prithvil C. Lall; Michael F. Oglo

[57] **ABSTRACT**

The present invention relates to measuring device for measuring a component of a force acting on a test body, such as a hydrofoil, positioned within a testing apparatus. The measuring device has a test body formed by a foil shaped center section and two adjacent end sections. Each end section is joined to the center section by a flexure member having sufficient stiffness so that there is negligible relative motion between the center section and the end sections as a fluid medium flows past the center section. At least one strain gauge is mounted to at least one flexure member to measure the forces acting on the center section. A method for measuring the load on a test body is also described.
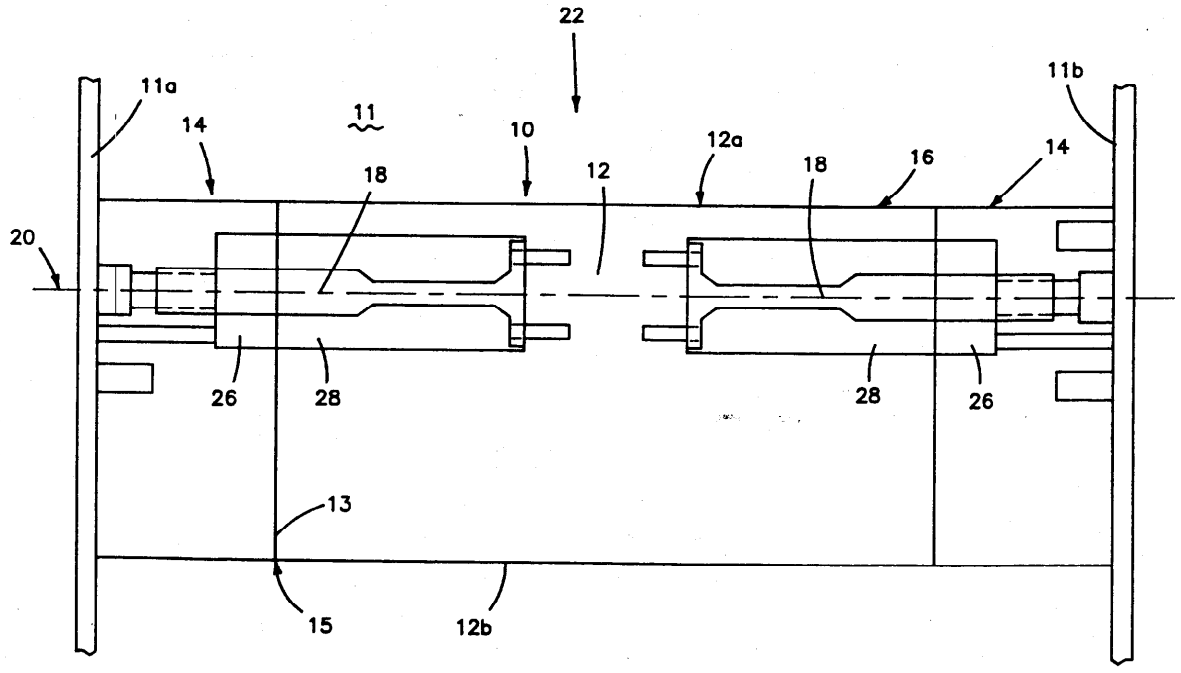
9 Claims, 3 Drawing Sheets