77073

US005760590A

United States Patent [19]

Striffler

[11] **Patent Number: 5,760,590**

[45] **Date of Patent: Jun. 2, 1998**

[54] **CABLE INTEGRITY TESTER**

[75] Inventor: **Foster L. Striffler**, New London, Conn.

[73] Assignee: **The United States of America as represented by the Secretary of the Navy**, Washington, D.C.

[21] Appl. No.: **604,144**

[22] Filed: **Feb. 20, 1996**

[51] **Int. Cl.**[6] **G01R 27/26**

[52] **U.S. Cl.** **324/514**; 324/519; 324/513

[58] **Field of Search** 324/514, 519, 324/513, 544, 686, 690

[56] **References Cited**

U.S. PATENT DOCUMENTS

2,794,169	5/1957	Gooding	324/514
2,882,491	4/1959	Gooding	324/514
3,047,800	7/1962	Eigen	324/514
3,096,478	7/1963	Brown	324/514
3,263,165	7/1966	Eigen	324/514
3,864,626	2/1975	MacLean	324/519
3,973,187	8/1976	Cereijo	324/519
4,177,097	12/1979	Hudson	324/519

Primary Examiner—Ernest F. Karlsen
Assistant Examiner—Jose M. Solis
Attorney, Agent, or Firm—Michael J. McGowan; William F. Eipert; Prithvi C. Lall

[57] **ABSTRACT**

A testing apparatus for determining the integrity of an electrical cable. Successive portions of electrical cable pass through an aqueous electrolyte with a distance measurement unit providing an indication of the position of a portion of the cable located in the electrolyte. A capacitance measurement unit connects to a selected conductor in the cable and to an electrode in the electrolyte to continuously generate a measured capacitance signal. An X–Y plotter produces an output that displays the measured capacitance as a function of the length of the cable passing through the electrolyte.
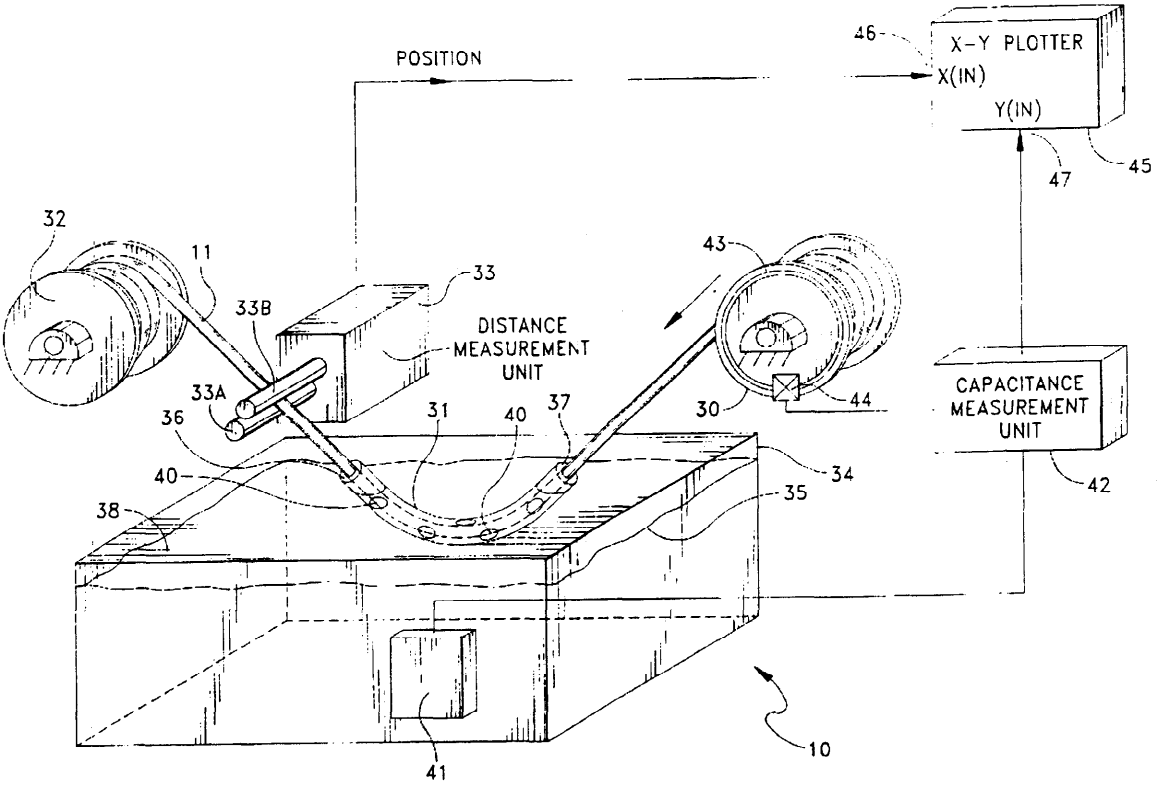
12 Claims, 5 Drawing Sheets