78064

US005808970A

United States Patent [19]

Nussbaum et al.

[11] **Patent Number: 5,808,970**

[45] **Date of Patent: Sep. 15, 1998**

[54] **MULTI-LAYER ACOUSTICALLY TRANSPARENT SONAR ARRAY**

[75] Inventors: **Fred Nussbaum**, Middletown; **Gerald T. Stevens**, Portsmouth; **Maurice J. Griffin**, Tiverton, all of R.I.

[73] Assignee: **The United Stated of America as represented by the Secretary of the Navy**, Washington, D.C.

[21] Appl. No.: **869,723**

[22] Filed: **Jun. 5, 1997**

[51] **Int. Cl.**[6] **H04R 17/00**

[52] **U.S. Cl.** **367/153**; 367/155; 367/158; 310/337

[58] **Field of Search** 367/153, 155, 367/158, 159; 310/337, 334

[56] **References Cited**

U.S. PATENT DOCUMENTS

4,638,468	1/1987	Francis	367/153
4,737,939	4/1988	Ricketts	367/158
5,367,501	11/1994	Kelly et al.	367/157
5,389,848	2/1995	Trzaskos	310/322
5,530,683	6/1996	Lindberg	367/164

Primary Examiner—J. Woodrow Eldred

Attorney, Agent, or Firm—Michael J. McGowan; William F. Eipert; Prithvi C. Lall

[57] **ABSTRACT**

A sonar array uses multiple acoustically transparent layers. One layer is a planar array of acoustic sensors that is substantially acoustically transparent. Another layer is an acoustically transparent wiring assembly that provides electrical connection to each acoustic sensor. A third acoustically transparent layer is a planar array of signal processing circuits coupled to the wiring assembly for processing electrical signals generated by the acoustic sensors. Each signal processing circuit resides within an area that is in geometric correspondence with a respective one acoustic sensor. Each signal processing circuit can include a preamplifier, an analog-to-digital converter and a digital multiplexer.
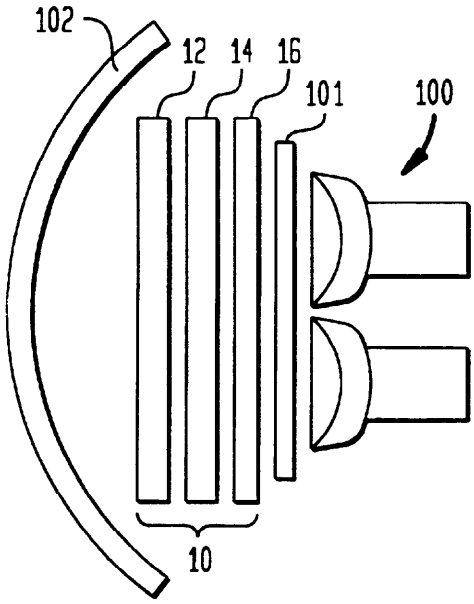
19 Claims, 1 Drawing Sheet