N.C. 75347

US005448962A

United States Patent [19]

Moody

[11] **Patent Number: 5,448,962**

[45] **Date of Patent: Sep. 12, 1995**

[54] **TORPEDO TUBE SLIDE VALVE**

[75] Inventor: **Paul E. Moody**, Barrington, R.I.

[73] Assignee: **The United States of America as represented by the Secretary of the Navy**, Washington, D.C.

[21] Appl. No.: **269,460**

[22] Filed: **Jun. 30, 1994**

[51] **Int. Cl.**[6] **B63E 8/32**

[52] **U.S. Cl.** **114/238**; 114/316; 251/343

[58] **Field of Search** 114/238, 316–319; 89/5, 1.809; 251/145, 343, 347

[56] **References Cited**

U.S. PATENT DOCUMENTS

2,837,971	6/1958	Wosak	89/5
2,995,144	8/1961	Manning et al.	251/343 X
4,848,210	7/1989	Bissonnette	114/238 X
5,210,369	5/1993	Cassidy	89/1.81

Primary Examiner—Sherman Basinger

Attorney, Agent, or Firm—Michael J. McGowan; James M. Kasischke; Prithvi C. Lall

[57] **ABSTRACT**

A torpedo tube and slide valve assembly includes a torpedo tube having a plurality of circumferentially spaced slots therein and an impulse tank surrounding the torpedo tube wherein the slots provide a flow path between the impulse tank and the interior of the torpedo tube. A cylindrical slide valve is slidably received on the outer surface of the torpedo tube but inside the impulse tank. The slide valve is slidably movable inside the impulse tank between a first position wherein the slide valve covers the slots and a second position wherein the slots are uncovered. The impulse tank includes a cylindrical sleeve portion which extends in a breechward direction to accommodate movement of the slide valve within the impulse tank. Circumferential sealing gaskets are preferably secured on the outside surface of the torpedo tube at each end of the slots for providing spaced circumferential seals between the torpedo tube outer surface and the slide valve inner surface.
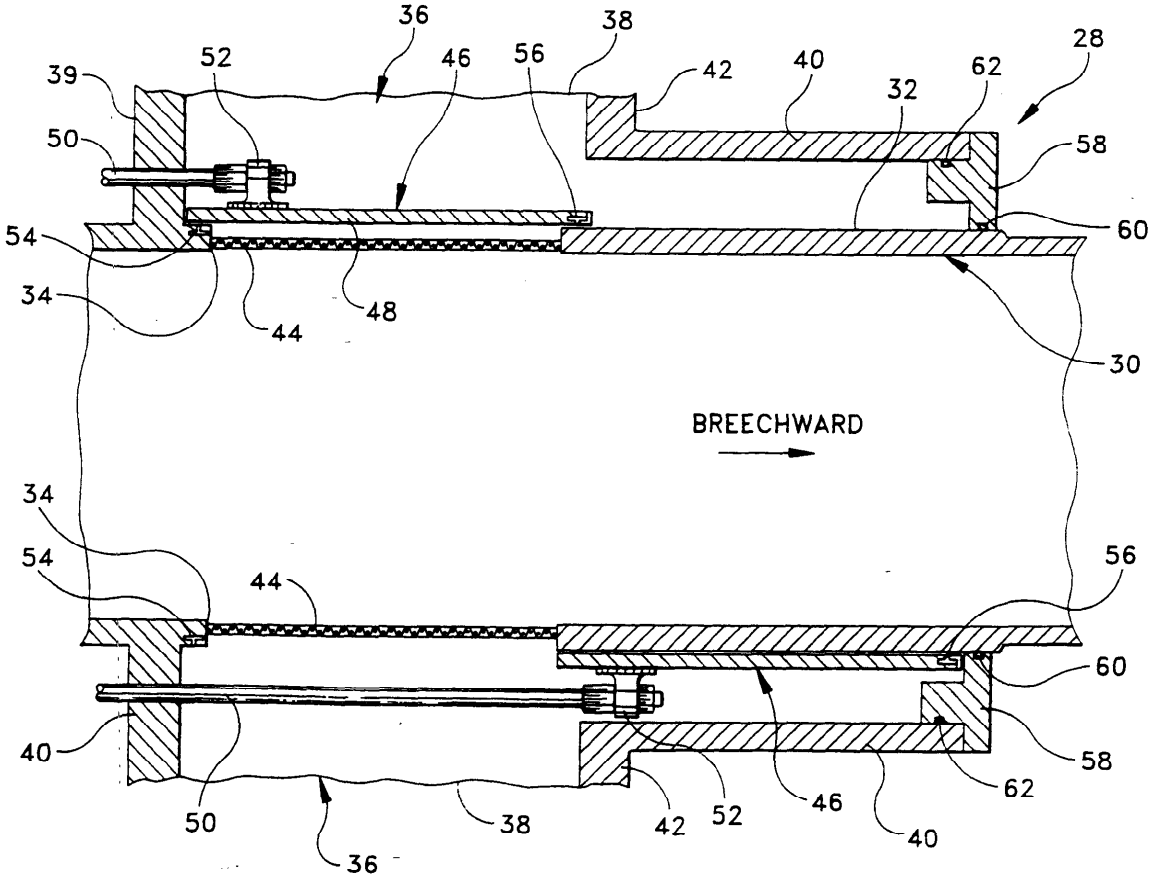
7 Claims, 3 Drawing Sheets