77097

US005691903A

United States Patent [19]

Racette, III

[11] **Patent Number: 5,691,903**

[45] **Date of Patent: Nov. 25, 1997**

[54] **INTEGRATED CABLE NAVIGATION AND CONTROL SYSTEM**

[75] Inventor: **Russell A. Racette, III**, Newport, R.I.

[73] Assignee: **The United States of America as represented by the Secretary of the Navy**, Washington, D.C.

[21] Appl. No.: **525,803**

[22] Filed: **Sep. 8, 1995**

[51] **Int. Cl.**[6] **G06F 165/00**; F16F 1/00

[52] **U.S. Cl.** **364/449.1**; 364/449.7; 405/158; 405/166

[58] **Field of Search** 364/443, 449.1, 364/449.7; 405/154, 158, 160, 166, 167, 168.3, 168.4

[56] **References Cited**

U.S. PATENT DOCUMENTS

3,576,977	5/1971	Kolb	405/158
3,668,878	6/1972	Jones et al.	405/168.4
4,120,167	10/1978	Denman et al.	405/166
4,164,379	8/1979	Denman	405/158
4,238,824	12/1980	DeMatte et al.	364/449.1
4,755,947	7/1988	Braschler et al.	405/158
5,000,619	3/1991	Kordahi	405/166

Primary Examiner—Gary Chin

Attorney, Agent, or Firm—Michael J. McGowan; William F. Eipert; Prithvi C. Lall

[57] **ABSTRACT**

A system for accurate guidance of a vessel and precise deployment of undersea cable or pipe includes cable control sensors for monitoring cable length, payout rate, and cable tension; navigation sensors for monitoring vessel position, heading, and speed; and environmental sensors for monitoring the water depth and current profile. A cable navigation control processor uses data collected by the cable control sensors, navigation sensors, and environmental sensors and compares this data with a predetermined cable payout plan to compute the ideal vessel heading and speed and the appropriate cable payout rate.
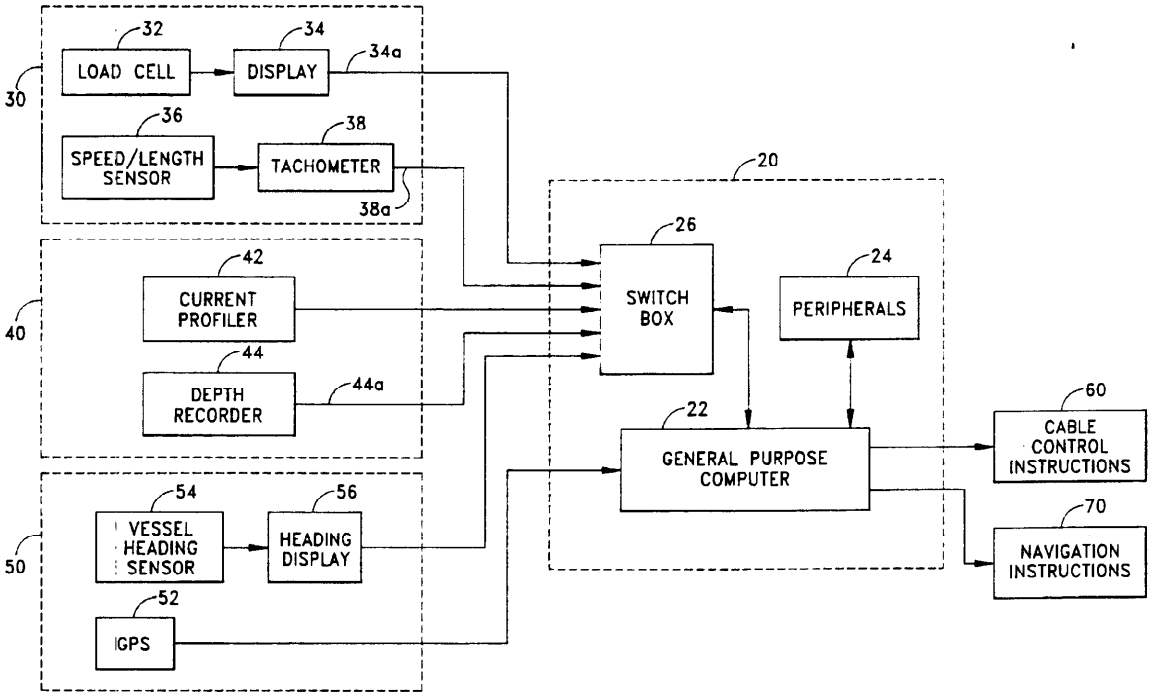
11 Claims, 2 Drawing Sheets