US005818141A

# United States Patent [19]

Cho et al.

[11] Patent Number: 5,818,141

[45] Date of Patent: Oct. 6, 1998

[54] **SQUIRREL CAGE TYPE ELECTRIC MOTOR ROTOR ASSEMBLY**

[75] Inventors: **Chahee P. Cho**; **William P. Krol, Jr.**, both of Portsmouth, R.I.

[73] Assignee: **The United States of America as represented by the Secretary of the Navy**, Washington, D.C.

[21] Appl. No.: **706,593**

[22] Filed: **Sep. 5, 1996**

[51] **Int. Cl.**[6] ..... **H02K 17/16**

[52] **U.S. Cl.** ..... **310/211**; 310/212; 310/44; 310/264; 310/124; 310/125

[58] **Field of Search** ..... 310/210, 211, 310/212, 44, 264, 124, 125, 191

[56] **References Cited**

U.S. PATENT DOCUMENTS

| | | | |
|---|---|---|---|
| 729,449 | 5/1903 | Thomson | 310/211 |
| 1,375,461 | 4/1921 | Kimble | 310/211 |
| 2,401,187 | 5/1946 | Prince | 310/211 |
| 3,221,196 | 11/1965 | Henry-Baudot | 310/268 |
| 5,435,859 | 7/1995 | Torii et al. | 148/103 |

FOREIGN PATENT DOCUMENTS

| | | |
|---|---|---|
| 2269234 | 12/1975 | France . |

*Primary Examiner*—Thomas M. Dougherty
*Assistant Examiner*—B. Mullins
*Attorney, Agent, or Firm*—Michael J. McGowan; Prithvi C. Lall; Michael F. Oglo

[57] **ABSTRACT**

A squirrel cage type electric motor rotor assembly includes first and second end plates of circular configuration, rigid tubes extending from the first plate to the second plate, the tubes being closed at either end thereof to define enclosed chambers therein, and granules of magnetic material disposed in the chambers, the granules being packed therein with a density leaving them readily movable to align with magnetic fields.
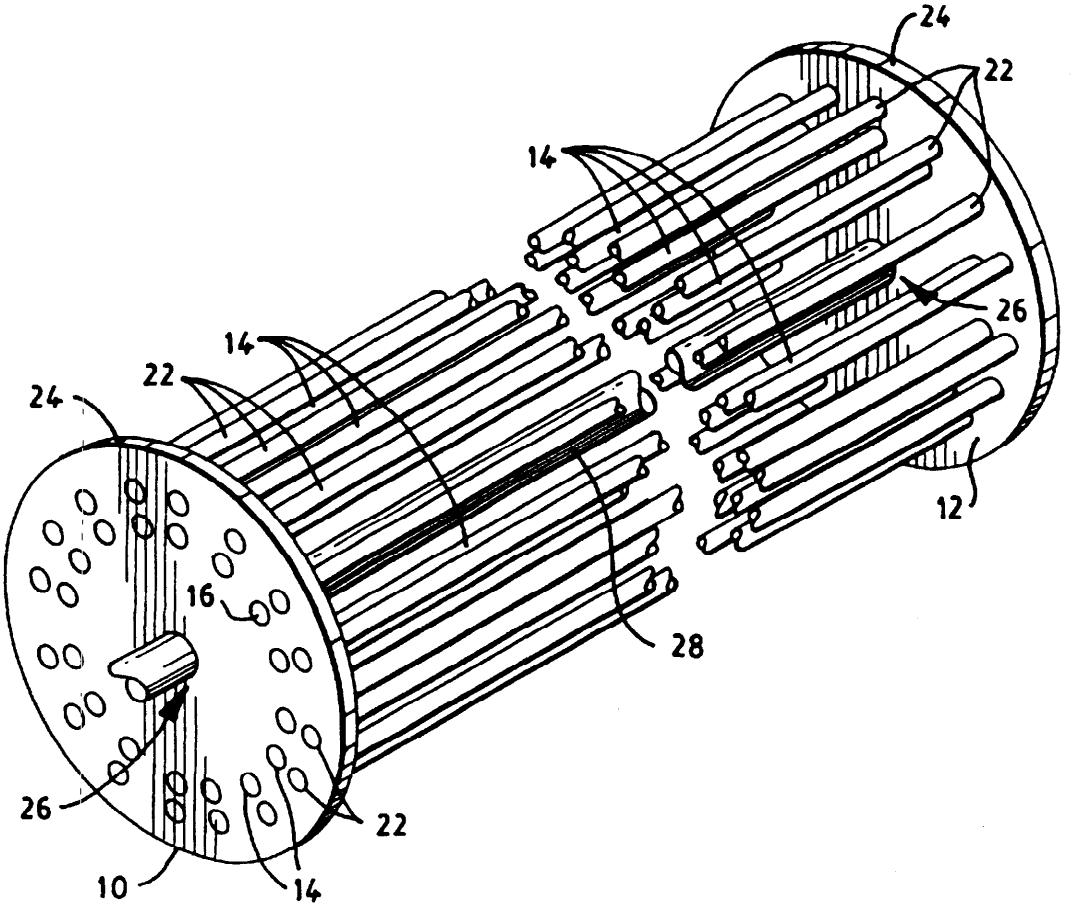
**12 Claims, 2 Drawing Sheets**