76399

US005607329A

United States Patent [19]

Cho et al.

[11] **Patent Number: 5,607,329**

[45] **Date of Patent: Mar. 4, 1997**

[54] **INTEGRATED MOTOR/MARINE PROPULSOR WITH PERMANENT MAGNET BLADES**

[75] Inventors: **Chahee P. Cho**, Portsmouth, R.I.; **Ralph A. Bedingfield**, Nashville, Tenn.; **William P. Krol, Jr.**; **James S. Uhlman, Jr.**, both of Portsmouth, R.I.

[73] Assignee: **The United States of America as represented by the Secretary of the Navy**, Washington, D.C.

[21] Appl. No.: **591,187**

[22] Filed: **Dec. 21, 1995**

[51] **Int. Cl.**[6] **F04D 25/06**

[52] **U.S. Cl.** ..... **440/6**; 310/67 R; 310/266; 417/356

[58] **Field of Search** ..... 440/6, 38, 47; 114/337, 338; 310/67 R, 112, 87, 266; 417/353, 352, 356, 410.1, 423.1, 423.3, 423.7, 420

[56] **References Cited**

U.S. PATENT DOCUMENTS

286,534	10/1883	Dey et al.	114/151
4,563,622	1/1986	Deavers et al.	318/254
4,758,132	7/1988	Hartwig	310/67 R
4,831,297	5/1989	Taylor et al.	310/87
4,953,811	9/1990	Smith	417/356
5,220,231	6/1993	Veronesi et al.	310/90

Primary Examiner—Edwin L. Swinehart

Attorney, Agent, or Firm—Michael J. McGowan; Michael F. Oglo; Prithvi C. Lall

[57] **ABSTRACT**

An integrated motor/marine propulsor is provided having an electric motor adapted for converting electrical energy into hydropropulsive energy. The electric motor comprises at least one stator assembly disposed in magnetomotive relation to a rotor. The rotor of the present invention advantageously includes a plurality of rotor blades wherein a portion of at least one of the rotor blades comprises a permanent magnet.
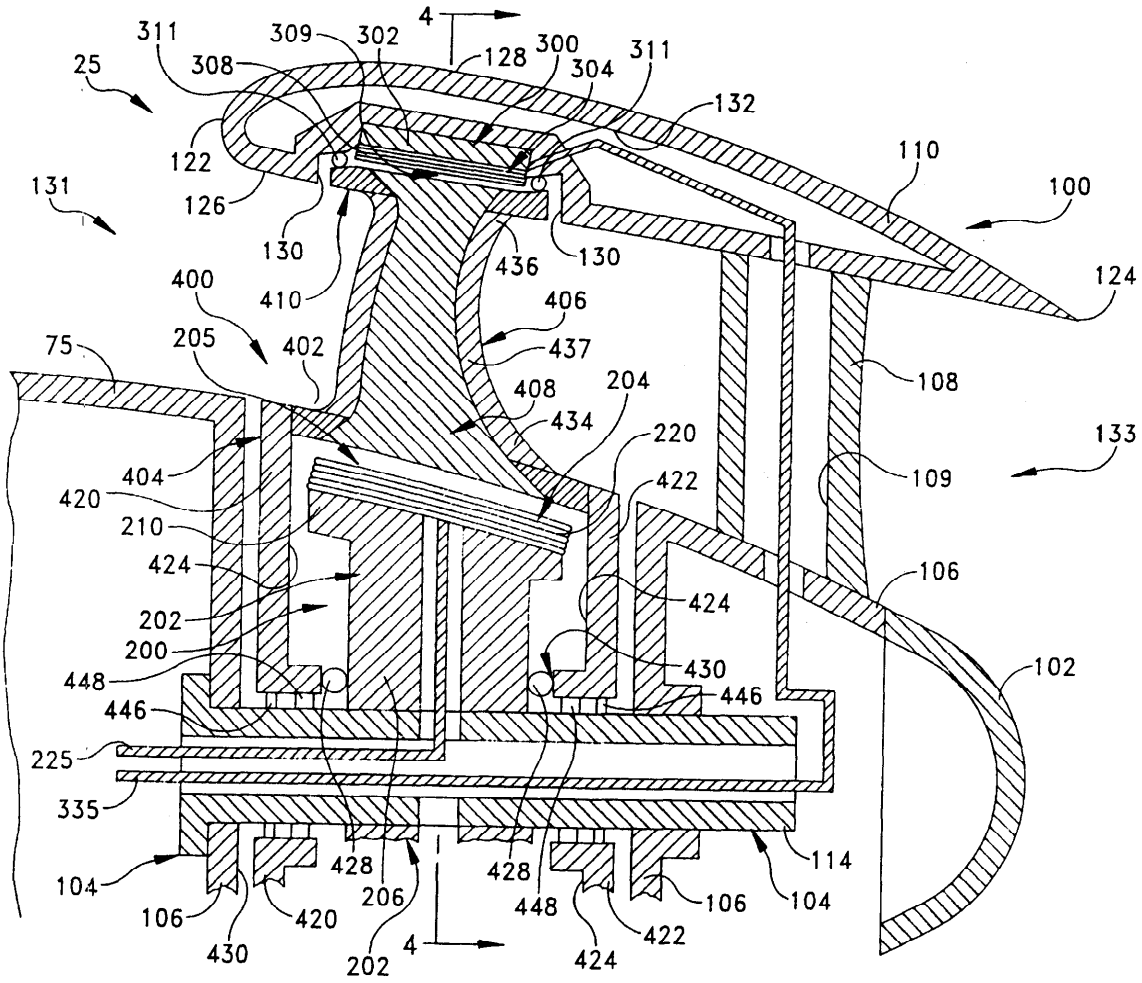
17 Claims, 7 Drawing Sheets