N.C. 74990

US005445905A

United States Patent [19]

Marsh et al.

[11] **Patent Number: 5,445,905**

[45] **Date of Patent: Aug. 29, 1995**

[54] **DUAL FLOW ALUMINUM HYDROGEN PEROXIDE BATTERY**

[75] Inventors: **Catherine L. Marsh**, Exeter, R.I.; **Stuart L. Licht**, Charlton City, Mass.; **Donna E. Matthews**, Portsmouth, R.I.

[73] Assignee: **The United States of America as represented by the Secretary of the Navy**, Washington, D.C.

[21] Appl. No.: **168,789**

[22] Filed: **Nov. 30, 1993**

[51] **Int. Cl.**[6] **H01M 4/36**

[52] **U.S. Cl.** **429/105**; 429/27; 429/101

[58] **Field of Search** 429/105, 27, 206, 218, 429/188, 101, 29

[56] **References Cited**

U.S. PATENT DOCUMENTS

4,328,291	5/1982	Winsel	429/27 X
4,348,465	9/1982	Struthers	429/27
4,492,741	1/1985	Struthers	429/101 X
4,528,249	7/1985	Garbraith	429/15
4,910,102	3/1990	Rao et al.	429/51

Primary Examiner—John S. Maples

Attorney, Agent, or Firm—Michael J. McGowan; Prithvi C. Lall; Michael F. Oglo

[57] **ABSTRACT**

A novel dual flow battery configuration is provided comprising an aqueous hydrogen peroxide catholyte, an aqueous anolyte, a porous solid electrocatalyst capable of reducing said hydrogen peroxide and separating said anolyte, and an aluminum anode positioned within said anolyte. Separation of catholyte and anolyte chambers prevents hydrogen peroxide poisoning of the aluminum anode.
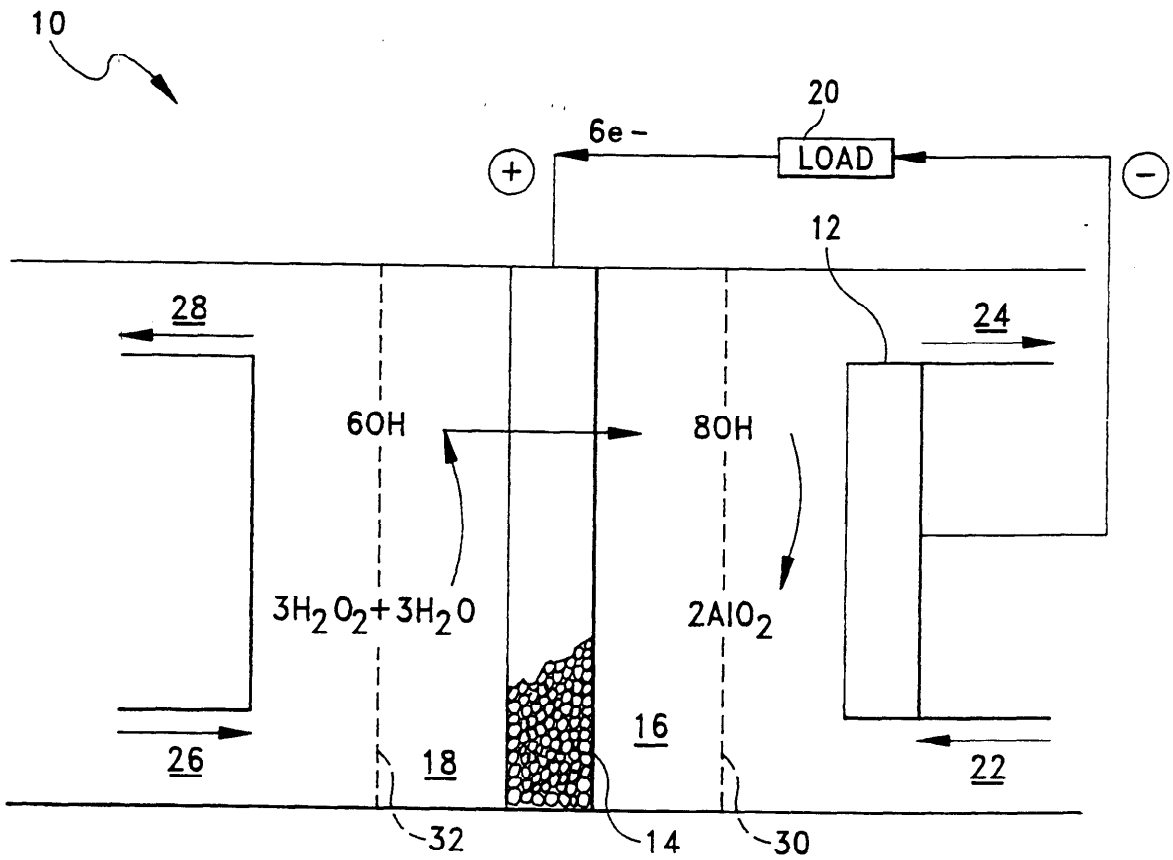
17 Claims, 5 Drawing Sheets