ATTACHMENT (1)

# SPECIFICATION

## I. INTRODUCTION

### A.

The mission of the Atlantic Undersea Test and Evaluation Center (AUTEC) is to provide a deep-water test and evaluation facility for making underwater acoustic measurements, testing and calibrating sonars, and providing accurate underwater, surface and in-air tracking data on surface ships, submarines, aircraft, and weapon systems in support of the U.S. Navy's Undersea Warfare (USW) and undersea research and development programs, and for assessment of Fleet operational readiness.

### B. GENERAL

The Naval Undersea Warfare Center Division Newport, Rhode Island, is the parent Command of AUTEC. As illustrated in Figure I-1, AUTEC consists of two Detachments, one at West Palm Beach, Florida, and the second at Andros Island in the Commonwealth of the Bahamas. Planning and administrative functions are performed at AUTEC Headquarters in West Palm Beach. Test programs are implemented at Andros Island.

Due to the limited resources of the local Bahamian economy, the Main Base (Site 1) and the four smaller downrange sites on Andros Island are self-sufficient, providing all their own utilities, sewage, housing, transportation, and related services. Almost all food, fuel, material, equipment, spare parts, etc., must be shipped from the Continental United States (CONUS).

The most heavily used of AUTEC's test facilities, the Weapons Range, operates approximately 4000 hours each year (see Test Support Workload described in Chapter IV(1) of this Specification), with tests normally scheduled six days per week, holidays excluded. All test operations conduct and related test support functions are expected to be provided as required to meet the requirements of the (weekly) AUTEC Schedule of Operations. Test operations are interrupted only for periods of scheduled range maintenance or range stand-down. Such non-test periods are normally scheduled by NUWC for 6-10 day periods in each calendar quarter, and for the last two weeks of December.

Specific Contractor manning and individual systems/equipment readiness responsibilities during such periods of interrupted test operations are delineated in the various individual Chapters of this Specification. In general, however, these responsibilities can be summarized as follows:

- During periods of scheduled range maintenance, Test Operations Support Systems and other capabilities may, as required, be rendered inoperable for the purposes of performing corrective maintenance or significant preventative maintenance, installing modifications, etc. The presence of operating personnel is not necessarily required. NUWC shall be consulted in advance regarding the Contractor's specific plans during such periods.

- Where appearing, the term "except for scheduled maintenance periods authorized by NUWC" recognizes that although maintenance and/or modification of major assets such as vessels, or capabilities, or critical systems such as computer hardware, networks, etc., is also periodically required, such may not necessarily coincide with scheduled range maintenance periods. NUWC shall be consulted in advance regarding the Contractor's specific needs/plans to schedule such periods.

- During periods of range stand-down, Test Operations Support Systems and other capabilities and equipment shall be left inoperable, although powered-down or in otherwise secured condition, requiring only nominal effort to resume normal operations tempo. Only support for critical functions, as described in the individual Chapters of this Specification, is required during these periods.

Administrative and other non-critical tasks and functions required by this Contract will be supported during normal working hours. Normal working hours at the West Palm Beach and Andros Island AUTEC Detachments are 0800 to 1700, with one hour for lunch, daily, Monday through Friday, holidays excluded. Where appearing in this Specification, "holidays" shall be interpreted to mean those recognized by the Federal Government of the United States for purposes of granting holiday leave.

- - - - - - - *deleted* - - - - - - -

## C. DESCRIPTION

The AUTEC Operational Areas (OP Areas) are located in the Tongue of the Ocean (TOTO) in the Bahamas as shown in Figure I-2. The test range area encompasses the air and underwater space adjacent to the east coast of Andros Island, extending approximately 33 miles southeastward from Site 1 located near Fresh Creek, and from five to fifteen miles seaward from shore. The facilities and instrumentation available to support the three individual deep-water ranges (see Chapter II(1) of this Specification) are located ashore at Site 1 and downrange Sites 2, 3, and 4.

AUTEC's Main Base, Site 1, encompassing approximately 420 acres, and the four downrange sites of about six to ten acres each are used to house personnel and shore-based instrumentation systems. Site 1 is a completely self-sufficient complex of buildings and facilities owned by the Government. Included are: watermaking, electrical and sanitary facilities; living, messing, berthing, and recreational facilities; communications and technical laboratory facilities; fuel storage, public works, maintenance shops and warehouses; and the Range Support Shop facilities. Since Andros is generally underdeveloped, any outside support required by the Andros Detachment is received by sea or air from CONUS.

The downrange sites (Sites 2, 3, 4, and 7 (there are no Sites 5 or 6)) are located 15 to 50 miles southward from Site 1 and are spaced approximately 8 to 15 miles apart. Site 2 is the only site accessible by road from Site 1. All downrange sites, including Site 2, are accessible by sea and helicopter; landing pads are provided at all sites. The downrange sites support various instrumentation systems including radars, Radio Frequency (RF) interferometers, radio, microwave, timing, in-water tracking system signal processors, tape recorders and range control equipment. Data from downrange tracking stations are transmitted to data processing and display equipment located at Site 1 via radio, wire or microwave link. Site 7 is closed and only periodically monitored.

Figures I-3 through I-6 are provided to illustrate the nature and scope of the facilities at the various Andros Island sites. There may be minor omissions/changes between the facilities illustrated and those actually in-place due to the dynamic nature of the AUTEC program.

## D. TASKING

AUTEC supports a variety of test and training programs in fulfilling its mission. NUWC, in turn, tasks the M&O Contractor to perform required work and provides guidance in methods/procedures via letter, Letter of Direction (LD), or Work Order (WO). A letter or LD is used for tasks or guidance which do not require separate accumulation of costs. A letter is written for unique, short duration tasks or guidance while a LD is written for tasks or guidance of a continuing nature. All other NUWC direction will be provided by WO. A WO is a Government document which tasks the Contractor to perform specific work, or to provide specific services for which the accumulation of cost data is required. "Standing" Work Orders are issued for the performance of tasks expected to continue for the term of the contract. The Work Order Numbering System uses a seven character alphanumeric code. This system provides NUWC with a unique program or work package identifier for use in scheduling and controlling range/support resources and for accumulation of cost data. Existing, on-going tasks are covered by standing work orders. A list and description of these may be found in Section 7 of AUTEC Reference Document: Contract Reports and Data File Descriptions. The Work Order/Test Number Structure is described in Table I-1.

## E. CONCEPT OF MAINTENANCE AND OPERATION (M&O)

NUWC Division Newport Code 70's concept of AUTEC Maintenance and Operation is to employ a civilian contractor to provide the majority of the manpower and expertise needed to support and accomplish AUTEC's mission, and to staff only that minimal number of Government personnel required to perform inherently Government functions and to provide corporate memory and continuity.

Under this concept, Government personnel work directly with AUTEC's customers to determine testing requirements and scheduling, and with AUTEC's Program Sponsor for matters such as funding and planning for the future. Contractor personnel assess work which needs to be accomplished, and work directly with their Government counterparts to establish priorities. Contractor personnel then develop the detailed procedures and methodologies, and manage their internal resources to perform the work on time and at minimal cost.

The successful execution of these inter-related responsibilities requires that a close working relationship exist between Government and Contractor personnel at all levels.

The operation of AUTEC is funded from two basic sources. The first of these is an annual appropriation from Congress, referred to as Institutional Funding, which covers approximately 70% of AUTEC's annual operating cost. The second is from customers who test at AUTEC, referred to as Direct Funding, which covers the remaining 30%. At the highest level, the Institutional Funds can be viewed as supporting all indirect costs of operation, while Direct Funds cover all costs readily identifiable to a particular customer's test support requirements including labor, material, facilities, minor construction, utilities, equipment and supplies, items damaged or consumed during testing, or any resources or item maintained for a specific customer. By law, AUTEC's annual expenses cannot exceed the total of all such funds received.

In the on-going climate of constrained Department of Defense budgets, the biggest challenge which AUTEC has faced has been the declining real dollar value of allocated Institutional Funds. Our range customers' budgets have similarly been affected, and although the test workload, and therefore the annual amount of Direct Funds received, varies greatly from year to year, the overall trend has been no better than stable.

To continue to perform our Mission, meeting our customers' needs in the face of this fiscal challenge has required that AUTEC seek means to continuously improve performance by decreasing the indirect costs of operation. To meet this objective, we have employed numerous methodologies and techniques to improve our processes and our ability to effectively allocate resources. We have stressed tools such as Business Process Re-Engineering, Quality Management through establishment of empowered Quality Management Boards and Process Action Teams, strategic planning, goal setting, benchmarking, and team building in partnership with our Maintenance and Operations Contractor. The continuation of these initiatives, as well as the need to identify and foster other innovative means to further improve efficiency and reduce costs on an on-going basis are critical to AUTEC's future.

AUTEC's Government organizational structure, together with its relationship to NUWC Division Newport, Rhode Island, is shown in Figure 1-7. AUTEC's organizational structure reflects process improvement initiatives, as described above, and adapts principles of Government Reinvention and Acquisition Reform to the way we do business. Organizational responsibilities are described below:

- <u>Head; Engineering, Test and Evaluation Department - Code 70:</u>

  Responsible for the overall management, operation, scheduling, maintenance, and Improvement and Modernization (I&M) of AUTEC. Code 70 is located at NUWC Division Newport, Rhode Island.

- Officer-in-Charge, NUWC Detachment AUTEC - Code 05:

  Exercises command functions as defined by Navy Regulations. Responsible for: Range Safety and Area Coordination matters as relate to use of AUTEC's assigned operating areas; for representing the Commander, NUWC Division Newport, for official visitors, military affairs, and protocol; coordinating matters related to emergency planning, disaster control, civil defense, and local security; and, in conjunction with Code 70, representing AUTEC in matters concerning the Bahamian Government.

- AUTEC Chief Financial Officer/Deputy - Codes 705/706:

  Responsible for: the overall financial planning, resource allocation, and funds management for AUTEC; assuring the cost effectiveness of AUTEC's existing and proposed instrumentation, infrastructure, facilities, support assets, and other capabilities; and for managing the AUTEC Maintenance and Operations Contract – ensuring that contractual requirements match AUTEC's needs and that performance is monitored to ensure that contract provisions are met. Codes 705 and 706 are located at NUWC Division Newport, Rhode Island.

- Enterprise Teams - Codes 7005, 7006, and 7007:

  Government personnel are assigned to one of three Business Area Enterprise Teams which share responsibility for the successful accomplishment of AUTEC's mission. The Business Areas are defined as follows:

  - Business/Customer Operations (Code 7005): Matters related to tasks, products, services, and assets needed to support the internal and customer-related administrative, and sponsor-funded major investment planning functions of AUTEC. Code 7005 additionally provides financial tracking support to the CFO. Code 7005 is located at NUWC Division Newport, Rhode Island, with elements at AUTEC's West Palm Beach, FL Detachment.
  - Test Operations (Code 7006): Matters related to tasks, products, services, and assets needed to support AUTEC's Range User (e.g. customer) test programs. Code 7006 is located at AUTEC's West Palm Beach, FL Detachment, with elements at AUTEC's Andros Island, Bahamas, Detachment.
  - Base Operations (Code 7007): Matters related to tasks, products, services, and assets needed to support and sustain AUTEC as an operational Navy facility. Code 7007 is located at AUTEC's West Palm Beach, FL Detachment, with elements at AUTEC's Andros Island, Bahamas, Detachment and at NUWC Division Newport, Rhode Island.

Each Government Enterprise Team, consisting of a team leader, process owners, and functional specialists is structured such that their fields of expertise and areas of responsibility encompass the requirements of this Specification as shown in Figure 1-8. This structure was established in order to:

- Provide a means whereby Government personnel could work with their contractor-identified counterparts, with similar expertise, at various levels to develop workplans, establish related annual budget requirements and priorities, and subsequently manage/monitor task, cost and schedule performance.
- Facilitate the daily interaction between Government and Contractor personnel necessary to accomplish AUTEC's mission.

Contractor Responsibilities and Workload Factors have been provided throughout this Specification in order to clarify the effort to be performed. The Workload Factors are projected estimates for the basic contract and option periods and should not be construed as a fixed workload for the entire contract period. The actual workload will probably vary. Most routine functions are governed by AUTEC Operating Control Directives (OCDs). A complete list of OCDs may be found in Chapter XV(4) of this Specification. To the extent possible, OCDs and other reference or requiring documents are listed in individual chapters for easy reference. The OCDs and other documents listed may be changed or superseded at any time. OCDs and other documents cited herein should be construed to mean the latest applicable version thereof.

The M&O Contractor is encouraged to cross-utilize personnel to the maximum extent possible. Any cross-utilization must, however, be realistic in order to not jeopardize maintenance or operations in any way.

AUTEC's major objectives are to support both RDT&E and Fleet Range User (e.g. customer) programs by providing accurate, reliable test data in a responsive, flexible, and cost effective manner, and to maintain the range and its support facilities in continual readiness to provide such data. Outages or faults in mission-essential equipment, subsystems, and systems shall be corrected as soon as possible by the Contractor. The Contractor shall make every effort to meet this objective at all times. NUWC reserves the right to require the conduct of calibration tests or other procedures to certify proper operation of all equipment. Such requirements are described in the various chapters of this Specification. These tests or procedures shall be conducted by Contractor personnel.

With the exception of the Contractor's Project Manager, this Specification is not meant to require any specific Contractor organization or management structure; nor is it meant to imply that the Government has a preconception of the form that the Contractor's organization and management structures should take. Similarly, it is not a requirement of this Specification that all tasks be executed by the Contractor's own in-house labor force. The Contractor is expected to propose and implement an efficient, cost-effective approach to accomplishing all of the tasks and responsibilities described herein. The Contractor may propose

to purchase services to perform any of the specific tasks or to execute specific responsibilities described, however such purchased service costs are subject to the direct and indirect cost ceiling provisions of the Contract (See Section H - Special Contract Requirements). Purchased services to execute extraordinary, or specialty requirements, as may occasionally be tasked by NUWC, or to perform non-routine or specialized equipment repairs are not subject to the aforementioned ceiling provisions and shall be executed as open purchases (See Section B, CLINs 0002 and 0006 and Section C, Provision C-4).

In addition to the facilities located on Andros Island, the Government will provide approximately 17,265 square feet of office space plus 1,000 square feet of ATE program (see also Chapter XII of this Specification) storage space, 1,548 square feet of ADP space, 4,952 square feet of light industrial space, and 326 square feet of vault space to the M&O Contractor at 801 Clematis Street in West Palm Beach.

The Contractor shall provide facilities (described in Section H - Special Contract Requirements) at the Palm Beach International Airport to: maintain required transport/cargo aircraft; warehouse material enroute to and from Andros; and to check-in/load Andros Island-bound passengers and their baggage.

## F. FUTURE CAPABILITIES

To pursue its mission, AUTEC continues to improve its technical capabilities and facilities in order to keep pace with the requirements of the test, evaluation, and training programs which it is tasked to support. This Specification details current AUTEC requirements, facilities, and capabilities which the M&O Contractor is required to support. Significant improvements, for which plans are currently being made, and for which the M&O Contractor shall eventually be responsible for supporting, are addressed in the following paragraphs for information:

1. - - - - - *deleted* - - - - -

**2.** ***- - - - - deleted - - - - -***

**3.** *- - - - - deleted - - - - -*

**4.** *- - - - - deleted - - - - -*

*- - - - - deleted - - - - -*

5. **AUTEC Hydrophone Replacement Project (AHRP).** AHRP will replace the existing Weapons Range hydrophones with four arrays containing 12 primary hydrophones (total of 48 hydrophones: 38 passive; 10 bi-directional). The four arrays also contain 20 secondary hydrophone elements for redundancy at critical locations (14 passive, 6 bi-directional). Installation is scheduled to be complete by the FY 00 timeframe. Integration into existing systems will be the same process as for MESA. The shore electronics systems used for MESA will be expanded to accommodate AHRP.

The fiber-optic cables installed to support AHRP will also terminate at Site 1. This will allow all the requisite support equipment and personnel, which service the weapons range, to be relocated to Site 1. The hydrophones that are currently individually cabled back to Sites 3 and 4 will no longer be required. The electrical connections will have to be terminated and the assets will remain underwater and in place.

**6. Advanced Radiated Noise Measurement System.** The existing Deployable Noise Measurement (DNM) system will be replaced by a new suite of in-water hardware. The system consists essentially of the in-water hardware cabled to equipment aboard a support vessel. The system can operate in or beyond the Tongue of the Ocean (TOTO).

Deployable in-water hardware for conducting both shallow and deep water tests will also be provided for operations which are not well suited to the use of a support vessel during testing. In this configuration, the in-water data is taken to a surface buoy and transmitted, via RF link, to a surface vessel or to shore.

These systems will be compatible with communications links at AUTEC and other remote test facilities.

- - - - - *deleted* - - - - -

## G. CONTRACTOR RESPONSIBILITIES

1. The Contractor shall provide a West Palm Beach, FL, based Project Manager (exact title is as established by the Contractor) who shall have overall responsibility for the execution of all tasks required by this Contract. The assigned Project Manager shall be the Contractor's primary interface with senior Government officials concerning matters of policy, performance, and efficiency of work performed under this Contract. This individual, assisted by others, shall be responsible for the administration, direction, and overall management of the Contractor's organization. The Contractor's management organization shall support requirements of the Applicable Documents cited in paragraph I (see also Chapter XV (4) of this Specification).

2. It is the responsibility of the Contractor to inform NUWC of all system, equipment, or asset failures that affect, or may affect

AUTEC's ability to perform its mission. When any such failure occurs, the Contractor shall immediately prepare, and forward to NUWC, a System/Equipment Outage Report as described in OCD-(01)-21-XX.

3. The Contractor shall submit all NUWC-required technical and administrative reports, described in Chapter XXV of this Specification, as pertain to the Contractor's administrative organization.

## H. KEY PERSONNEL/PERSONNEL QUALIFICATIONS

1. Key Personnel:

a. Contractor's Project Manager

1. Minimum Number Required: 1

2. Education: BS Degree in a scientific or technical field and a Masters Degree in Business Administration or a related field.

3. Experience: the person assigned must have a minimum of 10 years direct and demonstrated experience and progressive responsibility in the management, direction and administration of large, multi-faceted technical organizations, at least five years of which were as the senior manager of a field site or other location apart from the corporate offices. The person assigned must have specific experience which demonstrates familiarity with U.S. Navy procedures, and Government contracting rules and regulations.

Note: Five years of additional, directly related experience may be substituted for the Masters Degree requirement.

4. Other: The person assigned shall have demonstrated ability to motivate personnel, meet schedules, and to coordinate activities of an organization of comparable complexity to that of AUTEC. The person assigned must have excellent verbal communications skills, and must be able to communicate and interact with persons at all levels of Government, both civilian and military, and be familiar with accepted practices of Navy protocol.

## I. APPLICABLE DOCUMENTS

| | |
|---|---|
| OCD-(01)-21-XX; | Reporting Major System/Equipment Outages |
| Other OCDs; | Relevant/related OCDs as may be listed in Table XV-4 |
| APP 1-92G; | Customs and Immigration - AUTEC Personnel |
| APP 1-98G; | Mail Services - AUTEC Project |
| APP 2-46G; | Housing Plan - Andros Island |
| APP 2-109G; | Air Evacuations: Medical Emergencies and Deaths |
| APP 4-11G; | Access Control: AUTEC Project Personnel and Visitors or Personal Guests at NUWCDETAUTEC Facilities |
| APP 4-19G; | Procedures for Utilization of Drug- Detecting Canines |
| APP 4-21G; | Mass Casualty Plan |
| APP 7-15G; | Shipment of Personal Property |
| APP 8-11G; | Control and Use of the AUTEC Phone System |
| APP 8-24G; | Admiralty Incident Reporting |
| APP 8-27G; | Community Support Missions |
| APP 8-37G; | Smoking Policy |
| APP 9-5G; | Inspections and Searches for Recovery of Property |
| APP 11-4G; | Hurricane Plan, CONUS, AUTEC |
| APP 11-5G; | Hurricane Plan, Andros Range |
| AUTEC Reference Document; | Contract Reports and Data File Descriptions |

Figure I-1
NUWC Division Newport/Detachment AUTEC Locations

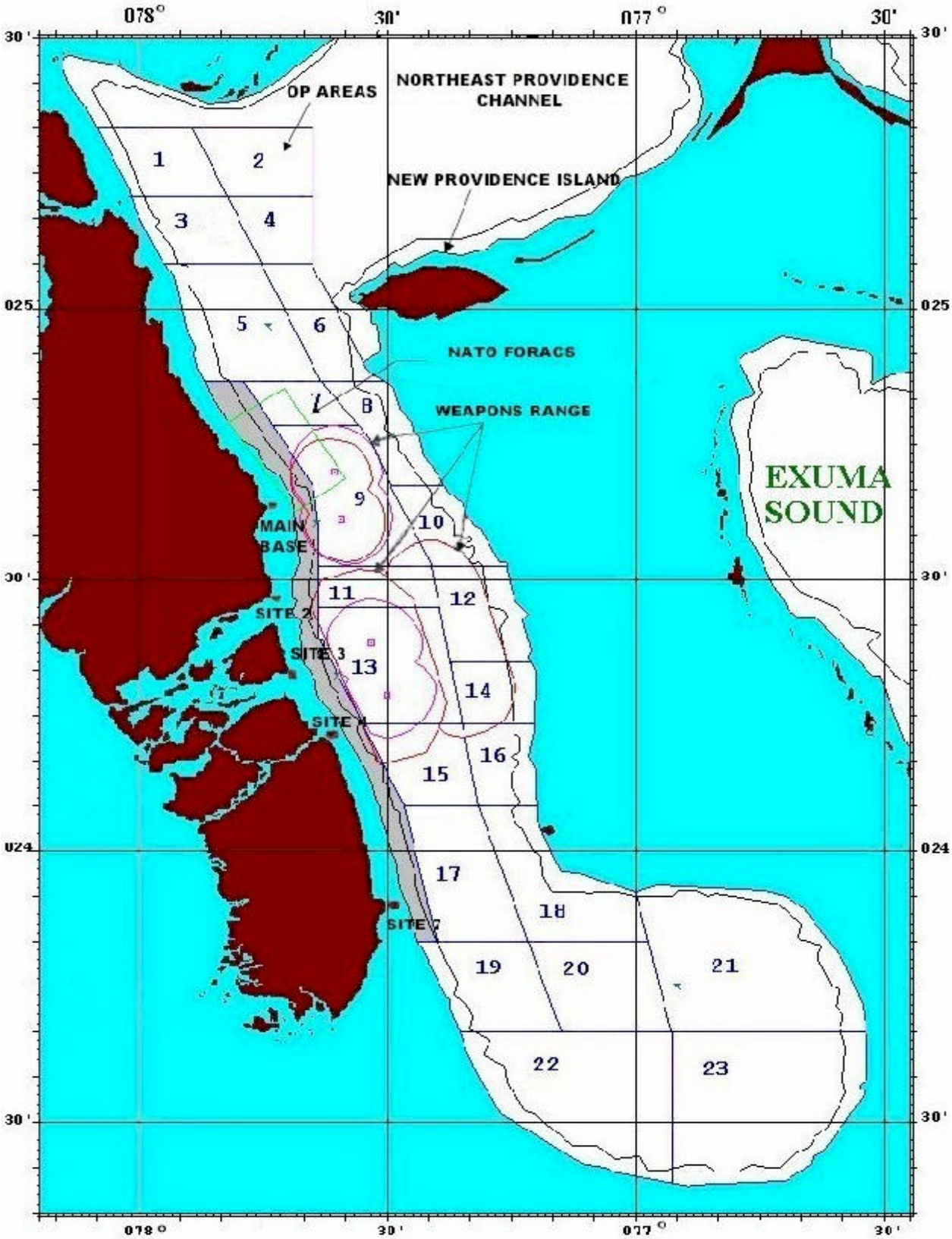


Figure I-2
AUTEC Facilities - Andros Island

Figure I-3
Site 1

Figure I-4
Site 2

Figure I-5
Site 3

Figure I-6
Site 4

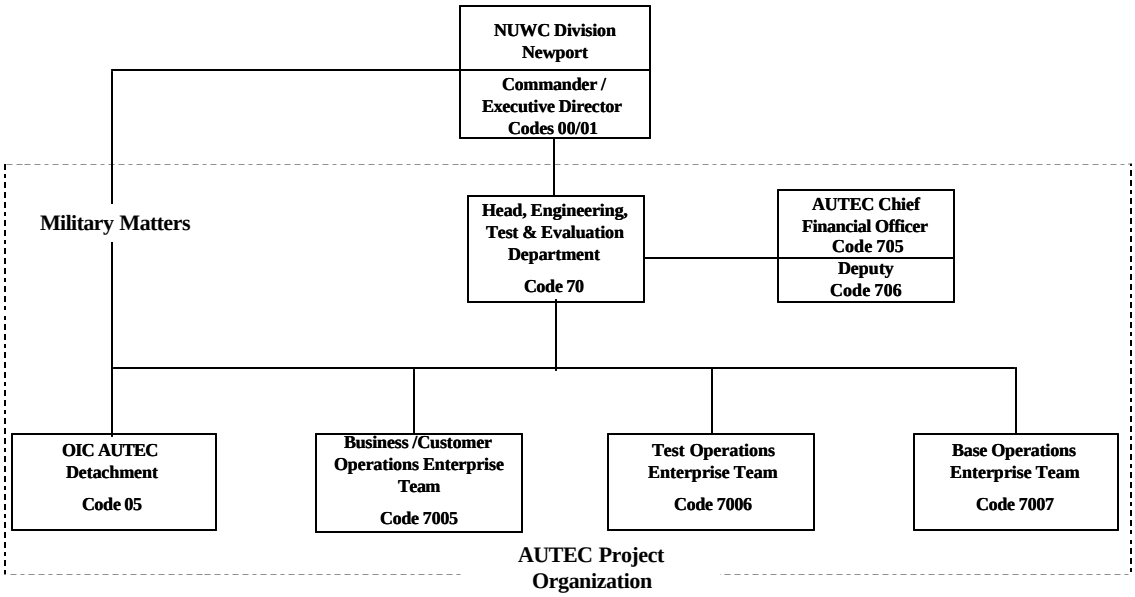


Figure I-7
NUWC Division Newport/AUTEC Project Organization

| AUTEC BUSINESS AREA TEAMS | | LEVEL OF RESPONSIBILITY | |
|---|---|---|---|
| A. | Business / Customer Operations | ← | Team Leader |
| | Specification Chapter Ref. | | |
| | Financial | ← | Process Owner |
| | • Contract Data (CFO Support) | ← | Functional Specialist |
| 1.0 | • Customer Billing | | |
| 1.0 | • Customer Cost Estimating | | Etc. |
| 1.0 | | | ↓ |
| | AIS | | |
| 6.1 | • Software Maintenance | | |
| 6.2 | • Hardware Maintenance | | |
| 6.3 | • Networks | | |
| 15.2 | Admin Support | | |
| B. | Test Operations | | |
| | Specification Chapter Ref. | | |
| | Customer Service | | |
| 4.1 | • Test Planning | | |
| 4.1 | • Test OPS Conduct | | |
| 4.2 | • Visitor Support | | |
| | Range Systems | | |
| 9.1 / 9.2 | • Weapons & Ordnance / Launch & Recovery | | |
| 8.0 | • MK30 Targets | | |
| 12.0 | • Acoustic Tracking Equipment | | |
| 12.0 | • Test Electronics Support | | |
| 13.3 | • Diving Services | | |
| | Range Data Acquisitions Systems | | |
| 2.1 | • Weapons Range | | |
| 2.2 | • Acoustics | | |
| 2.3 | • FORACS | | |
| 3.2 / 3.3 | • Minefield / PTS | | |
| 7.1 / 7.2 | • Comms / Timing | | |
| 4.1 | Range Safety | | |
| 5.0 | Range Data Processing Services | | |
| 5.0 | • Systems Maintenance & Acceptance | | |
| 5.0 | • Configuration Management | | |

Figure I-8
Business Area Team Structure

| AUTEC BUSINESS AREA TEAMS | | | LEVEL OF RESPONSIBILITY |
|---|---|---|---|
| C. | Base Operations | ← | Team Leader |
| | Specification Chapter Ref. | | |
| | Marine Support | ← | Process Owner |
| 18.0 | • Marine Operations | ← | Functional Specialist |
| | Air Operations Support | | |
| 19.1 / 19.2 | • Air Operations | | |
| | Technical Support | | |
| 15.1 / 15.3 / 15.4 | • Audiovisual / Training / PDS | | Etc. |
| 23.0 | • Industrial Security | | ↓ |
| 16.0 | • Systems Engineering | | |
| 16.0 | • Systems Analysts | | |
| 13.1 | • Metrology, Calibration , Wt. Testing | | |
| 13.2 | • Machine Shop and Welding | | |
| | Infrastructure Support | | |
| 21.1 | • Supply | | |
| 21.1 | • Inventory & Property Control | | |
| 21.4 | • Food Service | | |
| 21.2 / 21.3 | • Housing / Laundry | | |
| 26.0 | • Dependent Education | | |
| 21.5 | • Medical | | |
| | Public Works | | |
| 20.3 | • Transportation | | |
| 20.2 | • Utilities | | |
| 20.4 | • Facilities Engineering | | |
| 20.1 / 20.5 | • Facilities Maintenance / Minor Construction | | |
| | Quality Management | | |
| 17.0 | • TQL | | |
| 27.0 | • ARA – Retail | | |
| 27.0 | • ARA – Activities | | |
| | Protection & Environmental Support | | |
| 9.1 / 22.1 | • Ordnance Safety / Occupational Safety & Health | | |
| 23.0 / 24.0 | • Physical Security / Fire Protection | | |
| 22.2 | • Environmental Protection | | |

Figure I-8 (cont.)
Business Area Team Structure

# WORK ORDER/TEST NUMBER STRUCTURE

The Work Order Number structure consists of seven alphanumeric characters as follows:

Work Order Serial or Test Program Number - The first three characters (Work Order Serial) are numerical and are used to identify the following work categories:

- Serials 001 through 799 are reserved for Range User (Customer) - funded test programs.
- Serials 800 through 899 are used for Range User (e.g. Customer) - funded non-test support.
- Serials 900 through 989 are reserved for internal or "institutional" work.
- Serials 990 through 999 are reserved for Contractor accounting use only.

| Customer | Internal | Type of Work |
|---|---|---|
| 800-804 | 900-904 | General management, administration, clerical, financial, contract and personnel administration, and medical functions. (See Note 1). |
| 805-806 + 808-809 | 905-906 + 908-909 | Training (except for training related to Information Systems) including the time, materials and travel specifically related to training programs. (See Note 1). |
| 807 | 907 | Training related to Information Systems (data as above). |
| 810-814 | 910-914 | Routine preventive maintenance work not otherwise specified including self checks, calibration, and range equipment operational checks. (See Note 1). |
| 815-819 | 915-919 | Corrective maintenance work including all repair work to restore equipment or systems failures, except Repair Projects - Public Works estimated to cost $15,000 or more (see 850 and 950). (See Note 1). |

Table I-1

| | | |
|---|---|---|
| 820-826<br>+<br>828-829 | 920-926<br>+<br>928-929 | Operation of equipment or systems (other than Information Systems) not directly relatable to another current work order serial (i.e. operation of motor vehicles, operation of range craft in logistics support of downrange sites, operation of a computer system in general purpose use, Air Operations, etc.). (See Note 1). |
| 827 | 927 | Operation of Information Systems, or related equipments, not directly relatable to another current work order serial. (See Note 1). |

Table I-1

WORK ORDER/TEST NUMBER STRUCTURE

| Customer | Internal | Type of Work |
|---|---|---|
| 830-834 | 930-934 | Engineering support for specific projects (i.e. study feasibility of expanding Weapons Range tracking area, design a data transmission system to display radar data in the Real Time Display Center, provide Civil Engineering support in the planning phase of Public Works project work.) Note that the planning phase for Public Works projects is that phase from the determination of a requirement to project approval. The tasks have a definite completion time. |
| 835-836 + 838-839 | 935-936 + 938-939 | On-going technical support for items (except for Information Systems) of a continuing nature (i.e. in-air/in-water calibration tests, maintaining a pinger performance data base, etc.). (See Note 1). |
| 837 | 937 | On-going technical support for Information Systems' items of a continuing nature. (See Note 1). |
| 840-844 | 940-944 | Minor Construction Projects - Public Works. The erection, installation or assembly of a new facility; the addition, extension, alteration, conversion or replacement of an existing facility; or the relocation of a facility. Minor construction projects include equipment installed in and made a part of such facilities and related site preparation, excavation, filling, landscaping or other land improvements. The execution of construction projects includes the material procurement and the performance of the construction project work. The execution of construction project work will be ordered under the work order system with each project being assigned a separate task number. |

Table I-1 (cont.)

WORK ORDER/TEST NUMBER STRUCTURE

| Customer | Internal | Type of Work |
|---|---|---|
| 845-846 + 848-849 | 945-946 + 948-949 | Equipment Installation Projects - Public Works. The installation of equipment which is not made a part of the facility as defined for construction projects. Such equipment includes production, processing, technical training, servicing of RDT&E equipment such as machine tools, landing aids, photographic laboratory equipment, meteorological equipment, training devices, communications equipment, intercommunications equipment, ADP and other electronic equipment, and shore electronic and auxiliary equipment. |
| 850-854 | 950-954 | Repair Projects - Public Works. The restoration of a facility to such condition that it may be effectively utilized for its designated purpose whether by overhaul, reprocessing or replacement of constituent parts or materials that have deteriorated and have not been corrected through maintenance. For purposes of simplification, repair jobs of an estimated labor and materials costs of less than $15,000 will be accomplished as corrective maintenance under a standing Work Order within the 815 or 915 series. Examples of repair work to be undertaken as projects are: replacing diesel fuel lines from the storage area to the piers or power plant. |
| 855-856 + 858-859 | 955-956 + 958-959 | Maintenance Projects - Public Works. Categorization of maintenance work as a project for the M&O Contractor is an exception rather than the rule. Specific maintenance work may be processed as a project when: (1) the work must be accomplished as a single undertaking, and pursued to completion as rapidly as possible (i.e. in order to return a facility to an operational status with minimum delay); (2) when the project is in excess of $100,000; or (3) when the work is to be done by other than the M&O Contractor. |

Table I-1 (cont.)

WORK ORDER/TEST NUMBER STRUCTURE

| Customer | Internal | Type of Work |
|---|---|---|
| 861-864 | 961-964 | Assigned to segregate costs of special work (except for Information Systems) not otherwise appropriately covered above and which has a specific end date. |
| ---------- | 965-966 | Assigned for special work of a continuing nature, such as Bahamian Community Relations Program, etc. (See Note 1). |
| 867 | 967 | Assigned to segregate costs of special work for Information Systems not otherwise appropriately covered above and which have a specific end date. |
| 870 | --------- | - Assigned for continuing MK-30 Target work. |
| 871 | --------- | - Assigned for continuing Acoustic Tracking Equipment (ATE) work. |
| 880-886 | 980-986 | All other work (except as related to Information Systems) of a continuing nature not otherwise specified (i.e. SEABEE support, supply work, housekeeping functions, laundry work, etc.). (See Note 1). |
| 887 | 987 | All other work related to Information Systems of a continuing nature not otherwise specified. |
| --------- | 990-997 | Other Contractor assigned Work Orders. The Contractor shall keep the Government apprised at all times as to work being performed under each serial number utilized. |
| --------- | 998 | Reserved for Range Resource Utilization Reporting only. Ex: Equipment Available/Not Required and Equipment Not Available. |
| --------- | 999 | For Contractor accounting use only. Ex: Award Fees, Paid Absences, G&A, and Accel/G&A Reversals. |

Note 1: Typically, these serial numbers are assigned to “Standing” Work Orders.

System Code - The fourth, or middle character will always be a letter and will consist of one of the following codes for all Work Orders:

Table I-1 (cont.)

| Customer (001 through 899) | Internal (900 through 999) |
|---|---|
| A = Acoustic Test | Y = ALL |
| B = Berry Island Operations (Non-PTS) | |
| D = FORACS Test Planning | |
| F = FORACS Range | |
| G = FORACS Report Generation | |
| H = Ocean Haul Down Facility | |
| M = Mobile Noise Barge (MONOB) | |
| N = Non-Range | |
| P = Portable Tracking System | |
| W = Weapons Range | |

Task Number - The fifth through the seventh characters are the Task Number, numerical characters 000 through 999, used to identify a particular task within the Work Order serial series.

- - - - - *deleted* - - - - -

# II. RANGE DATA ACQUISITION SYSTEMS

## 1. WEAPONS RANGE

### A. GENERAL

The Weapons Range data acquisition system is designed to acquire and display three-dimensional position and time data (e.g. X, Y, Z, T) for various objects (e.g. targets) during ASW tactical exercises and technical/operational evaluations of developmental ASW systems. Tracked objects may include: surface ships; submarines; exercise weapons; targets; sonobuoys; and aircraft. In addition to the tracking hardware, a suite of simulation hardware is used to simulate threat radar as well as to simulate the acoustic response of sonobuoys.

### B. DESCRIPTION

The Weapons Range can be divided into four subsystems: the in-water tracking instrumentation system; the in-air tracking instrumentation system; and the Real Time Display Centers; and simulation systems. Weapons Range in-water/in-air tracking, all real-time displays, and range track data collection are supported by the ARGOS real-time computer program. The individual simulation systems: ESM (threat radar) and AS3 (sonobuoy simulation), receive tracking data from ARGOS, but operate as their own operational platform. Figure II-56 depicts the ESM and figure II-57 depicts the block diagram for AS3. Significant Weapons Range instrumentation equipments, itemized by site location, are described in Table II-1. ARGOS is discussed separately in Chapters IV(1), V, and VI of this Specification. All in-water and in-air tracking (except 2-dimensional track - see Chapter II(3) of this Specification) is the responsibility of the Weapons Range. Instrumentation systems are described in the following paragraphs.

**1. In-Water Tracking System.** In-water tracking is accomplished through the generation of a series of acoustic pulses of known characteristics, emitted by an acoustic projector, or pinger, attached to the object being tracked. These pulses are received by hydrophones, arranged in groups, or arrays, located in various areas on the floor of the Tongue of the Ocean. The in-water tracking system is comprised of: 68 multiplexed sensor nodes, utilizing four fiber optic strings installed, in 2001; and 15 individually cabled hydrophones formally referred to as W1/W2. The in-water system is designed to achieve internal X/Y in-water tracking accuracy of $\pm 3$ yards and an internal Z (depth) accuracy of $\pm 4$ yards. Sixteen of the 68 multiplexed sensor nodes are bi-directional, permitting both receipt and transmission of acoustic signals. The

multiplexed fiber optic cables, and the individually cabled hydrophones, all terminate at Site 1. A legacy system of bottom-mounted hydrophones individually cabled to Site 3 and Site 4, referred to as W3/4, remains in place and operational.

Figure II-1 depicts the location of the various different tracking areas within AUTEC's Weapon Range and location of bottom mounted tracking equipment. Figure II-2a depicts the major components of the Weapons Range in-water tracking system, in block diagram form, together with associated supporting systems. The following discussion of the in-water tracking system is generally keyed to these diagrams.

Bottom-Mounted Hydrophone Arrays:

The Weapons Range bottom-mounted hydrophones are arranged in groups located seaward of Sites 1, 2, 3, and 4, which are respectively referred to, in total, as the Weapons Range (WR). Operational requirements may necessitate the range be divided into two or more areas for concurrent testing. A standing line of division is located at gridline "latitude 24 degrees 29 minutes North". The tracking area to the north of this division is referred to as Weapons Range North (WRN), while the area to the south of this division is referred to as Weapons Range South (WRS).

The Ocean Sensor Subsystem (OSS) is comprised of deep water sensor nodes, electrical mechanical optical cables (EMOC), fiber optic multiplex telemetry, deep water pressure housings for the electronics, optics and acoustics, the interfaces (terminations) from the EMOC to the pressure housing, a cathode and tail cable. The multiplexed sensor nodes have a hydrophone bandwidth of 50 Hz – 40 KHz. The unidirectional (receive-only) sensor nodes consist of a hydrophone, receiving and signal conditioning electronics, power distribution, and Synchronous Optical Network (SONET) OC-3 optical telemetry components. The bi-directional sensor nodes, in addition to the above receive-only components, each encompasses a projecting transducer, a power amplifier, and a tuning network. In the nodes the analog signals are sampled, converted to digital format, and merged with data from other nodes into a single stream of digital words, which are transmitted to shore via a fiber optic conductor. On shore, the words are demultiplexed into separate data registers respective of each hydrophone node. Each node is constructed of Grade 3 CP Titanium, and measures 8 inches in diameter and 102 inches length. The hydrophones are suspended approximately 18 feet above the node. The 14 former W ½ hydrophones are identical to the hydrophones cabled to Sites 3 & 4 as described below.

The legacy bottom-mounted hydrophones cabled to Site 3 & 4 consist of 40 KHz resonant spheres of PZT-5, having an upward-looking hemispherical beam pattern. These hydrophones are designed to operate over a useful frequency range of 8 to 50 KHz. Filters are incorporated in these units to reject low frequencies, such as sonar pulses, which might interfere with acoustic tracking. Each hydrophone, together with a tuned broadband pre-amplifier, is mounted 15 feet (4.5 meters) above the sea floor on an aluminum frame, and is individually cabled ashore.

- - - - - *deleted* - - - - -

The cables from 28 of the W 3/4 bottom-mounted hydrophones in the northern range area terminate at an offshore tower off Site 3, while the cables from the remaining 24 bottom-mounted hydrophones terminate at a tower off Site 4.

- - - - - *deleted* - - - - -

At the offshore towers at Sites 3 and 4, the incoming analog hydrophone signals are passed through impedence-matching networks, or Baluns, and routed ashore via a single multi-conductor cable. Once ashore, the signals are first passed through post-amplifiers and then input to signal processors located in the Site's Instrumentation Building. Constant-current power supplies, required to power the pre-amplifiers on the individual hydrophones, are co-located with the post-amplifiers. Similar functions are performed, for the W 1/2 hydrophone signals, in the Command Control Building (CCB) at Site 1.

*- - - - - deleted - - - - -*

Acoustic Pingers:

Acoustic tracking sources, or "pingers", are installed in all vehicles to be tracked by the in-water system. Pingers for weapons or similar vehicles are battery powered and independent of any other equipment. Vessel pingers also operate independently except that most use AC power provided by the vessel. Battery powered vessel pingers, referred to as Portable Underwater Tracking Transducers (PUTTs) are available but are not normally used. Pingers emit acoustic pulses at selected frequencies and are differentiated by signal characteristics or pulse intervals. Acoustic source levels of over 190 dB (reference 1 micropascal) ensure detectable signal-to-noise ratios under conditions of acoustic interference typical of a Fleet training exercise.

Underwater Communications :

The system includes an Underwater Communications System (UCS) for transmission and receipt of voice and data. (see Figure II-2b) The UCS utilizes the 16 bi-directional sensor nodes, and incorporates the UQC and WQC projectors with associated AN/WQC-2A shore-site electronics. Selected tracking system hydrophones are used as receivers.

Shore-Site Processors:

The Shore Electronics Subsystem (SES) receives the in-water acoustic sensor node data over the optical fiber and analog electrical signals from the 14 W 1/2 hydrophones. The SES provides an optical output to the Signal Processing Subsystem (SPS) and also converts the optical signal to electrical, demultiplexes the data, provides 68 analog outputs, one for each of the sensor nodes along with a digital data output for all hydrophones, and a demodulated monitor output. The SES will modulate voice into the underwater telephone (UQC) band, digitize the analog voice signal, transmit that signal to the selected bi-directional sensor node, and output the acoustic signal into the water. Additionally, the SES is capable of receiving an underwater acoustic telemetry analog signal and transmitting this signal into the water via the bi-directional nodes. The in-water tracking Digital Signal Processors (DSP) receive incoming signals from the hydrophones and perform complex Digital Signal Processing (DSP) algorithms, which identify, verify, and validate the signals as required. Site 1 has one UNIX WorkStation networked to a VME chassis which contains the DSP hardware. The DSP's are capable of verifying and validating a variety of pinger signal formats simultaneously. Site 1 validated ping data is transmitted via fiber optic link to the Site 1 ARGOS Data Distribution System. Sites 3 and 4 each have one UNIX WorkStation controlling two 19 inch equipment racks. One rack provides for incoming hydrophone signal distribution and switching, while the

other holds a VME chassis containing the (DSP) hardware. Site 3 and

4 validated ping data is transmitted via microwave link to the Site 1 ARGOS Data Distribution System. The Site 3 and Site 4 Digital Signal Processors may be controlled either locally, or remotely from Site 1.

Tape Recorders:

The in-water system provides for both digital and analog archive and subsequent playback at Site 1. Analog tape recording subsystems are installed at Sites 3 and 4 for recording raw in-water data to be used for post-test processing if needed. Each recorder incorporates a standard edge-track channel for Inter-Range Instrumentation Group (IRIG) time code annotation. The channels used are as follows:

- One Channel for each hydrophone
- One Channel for IRIG-B time code
- One Channel for vernier time signal (50 KHz)
- One Channel for underwater voice recording
- One Channel for computer designated switching instructions

Acoustic Command Link Controller:

A desktop personal computer (PC) used to transmit commands to MK-30 Mobile Targets during in-water real-time operations via existing WQC/UQC underwater communications systems. Operated by MK-30 Mobile Target personnel, assigned to monitor target performance during real-time operations, located in the Main Base Command and Control Building (CCB). (See also Chapter VIII of this Specification).

Miscellaneous:

In order to provide verification of the occurrence of certain critical events during selected on-range tests, an Acoustic Interface Measurement System (AIMS) is installed at Sites 1, 3, and 4. AIMS allows for the real-time aural monitoring of two simultaneous expected in-water acoustic events.

## 2. In-Air Tracking System

Test object tracking is accomplished using either radars, RF

multilateration, RF interferometers, AUTEC Andros GPS, FORACS GPS, or the GPS-based Large Area Tracking Range (GPS/LATR) system installed at the various sites. The precision tracking radars are capable of tracking a single target in excess of 300,000 yards (line of sight). Downrange track data are locally time-tagged, recorded and sent to Site 1 via microwave link where they are processed, again recorded, and then displayed in the CCB. The Hyperbolic In-Air Tracking System (HITS) provides track of up to ten surface ships/aircraft. The GPS/LATR system can provide track of up to 124 surface ships/aircraft simultaneously. Additionally, in-air track of sonobuoys is available via the Sonobuoy Tracking System (STS). An X-band surface surveillance radar at Site 2 is provided for weather monitoring, and use on an as-required basis to support in-house engineering functions. Functional block diagrams, showing the major components of the radar tracking, HITS, and GPS/LATR systems, are provided in Figures II-3, II-4, and II-5 respectively. The following discussions are keyed to these diagrams.

Tracking Radars:

The AUTEC Instrumentation Radar System (AIRS) consists of three X-band precision tracking radars (designated radars 2B, 2F, and 3D) located at Sites 2 and 3 respectively. These radars can provide track of surface craft, helicopters, and fixed wing aircraft. Both beacon and skin track modes are used. Beacon track includes both coded and uncoded beacons. Radar 2F is primarily a test bed used to support specialized engineering tests. The Time/Space/Position Information (TSPI) is transmitted via microwave link to the Site 1 ARGOS Data Distribution System.

Hyperbolic In-Air Tracking System (HITS):

HITS is an automated, RF multilateration tracking system that provides TSPI data on transponder-instrumented test objects. System surface coverage is to the east of Andros to a range of approximately 20 NMI (see Figure II-6) with instrumentation located at Sites 1, 2, 3, & 4. Each has: an X-Band receiver mounted 200 ft. above mean sea level; a 19" rack housing the HSS-2000; power conditioning equipment; and microwave interface equipment. In addition, Site 1 has a reference transmitter and Site 3 has an off-shore beacon (test target), both with controlling electronics.

Site 1 instrumentation includes: 4 Code Detection units; 1 Communications Multiplexor; 1 Hyperbolic Processor; and various microwave and

computer interface equipment. Tracked-platform instrumentation consists of a modified AN/DPN-78 radar transponder. RF data is received by the two HITS receivers at each site and sent via cable to the HSS-2000 where it is digitized and time synchronized to 1PPS. The digital output of the HSS-2000 contains time of arrival, altitude, and ID data which is sent to the CCB via microwave data link, where additional processing is performed, including code detection, data quality, and initial best fit and velocity vectors for each ID and receiver. These data are then forwarded to the Hyperbolic Processor where target position is calculated using a hyperbolic algorithm that calculates the difference in the arrival times between the target transponder and reference transmitter signals. Target ID, position, and altitude is then forwarded to ARGOS for display and archiving.

Air Surveillance Radar:

- - - - - - *deleted* - - - - - -

Surface Surveillance Radar:

Surface surveillance capability is provided by one X-band RTR-II radar located at Site 2. (This radar is designated 2 SURV). Remote video data may be displayed and recorded in the Real Time Display Centers if required.

GPS/LATR:

The Large Area Tracking Range is a DGPS-based tracking system that provides TSPI data for aircraft and surface ships if they are equipped with a Participant Instrumentation Package (PIP). Using GPS satellite information, the PIP computes and stores positional and other parametric data continuously and, when interrogated, transmits this stored information to a base station through a

VHF communications link. System ocean surface coverage is approximately 30 nmi from AUTEC's 220 foot antenna tower at Site 2 on Andros Island. System aircraft coverage is dependent upon altitude, but can be as great as 125 nmi. The LATR Ground Interrogation Station (GIS), located at Site 2, is contained in two 19 inch equipment racks in the Instrumentation Building. Data received by the GIS is transmitted to Site 1 via microwave, where it is received and processed by the LATR Ground Equipment Suite in the CCB.

STS:

STS is an automated interferometric position-finding system for sonobuoys or similar RF sources. Receiver stations are located at Sites 2, 3, and 4. Each station consists of a modified AN/ARS-5 airborne receiver/converter, a power supply, an antenna field (consisting of six antennas, each located on a 40 foot high pole), two calibration/test antennas, and various RF and

power cabling. Data from these receivers are transmitted via the AUTEC microwave system to Site 1 where the main STS computer systems are located. These computer systems consist of one rack of equipment containing two HP 330 computers and various supporting equipment such as a time code receiver, expansion chassis, data interface equipment, hard disk, additional RAM, and a terminal. Other peripherals include two HP 7979A 9-track recorders, an HP 2235B printer, and three remote terminals. Position data are sent from the main STS computer to the Weapons Range ARGOS computer system for real-time target display and post-test ARGOS data processing.

**3. Real Time Display Centers (RTDCs).**

AUTEC has two large RTDCs located in the CCB at Site 1 on Andros Island, and one smaller, remote Real Time Display Center in the Headquarters facility in West Palm Beach, FL. The position of all objects tracked by the Weapons Range in-water and in-air instrumentation systems are displayed in real time, on various Large Screen Displays (LSDs) or on smaller work stations, giving Range Users a means to view the progress of their test. Functions and operation of the RTDCs are described in detail in Chapter IV(1) of this specification.

4. OFF-BOARD ADVANCED SYSTEM STIMULS (OASYS) Systems

Electronic Support Measurement (ESM) System

AUTEC has an active radar threat simulation system. The processing and active emitter system is located at Site 2 with command and control functions carried out by an opertor at Site 1 or 2. The system is linked to real time track (ARGOS) via the microware link to allow the active emitters to track a target throughout the scenario. Hardware includes a Combat Electromagnetic Environment Simulator (CEESIM), active RF emitters and power systems, a tower for supporting the emitters and PC based architecture to provide operational control of the system. The threat simulator (CEESIM) is built around a proprietary software program in the UNIX environment. Operational control program is also proprietary and is run under Win/NT.

Advanced Sonobuoy Simulation System (AS3)

AUTEC has (Summer FY02) a system which can simulate the acoustic and ocean drift of 8 sonobuoys simultaneously. Through RF links to range aircraft, AS3 records the virtual deployment of a sonobuoy and in turn generates the acoustic parameters that could be detected by a real sonobuoy. This data is then telemetered to the aircraft through its existing sonobuoy data link for onboard processing. Located at Site 2 but controlled from Site 1, the system interfaces to ARGOS to gain information on the track position of the in-air participant and to provide the locations of the virtual sonobuoys.

## C. CONTRACTOR RESPONSIBILITIES

1. Except as noted, the Contractor shall maintain all of AUTEC's Weapons Range instrumentation systems and equipment in an operational status except during scheduled range maintenance periods authorized by NUWC. Tracking radars at Sites 2 and 3 shall be maintained and operated as described in paragraph D. LATR Participant Instrumentation Package (PIP) responsibilities are presented in Chapter XII of this Specification. The Contractor shall ensure that routine preventative maintenance is conducted on a not-to-interfere basis with scheduled operational requirements. All Weapons Range equipment will be manned and operated in accordance with the AUTEC Schedule of Operations, published Operations Directives, Workload Factors given in paragraph D, Applicable Documents cited in paragraph F, and other requirements stated below. Special requirements may be tasked by NUWC Work Order or Letter of Direction.

2. The general approach to accomplishing AUTEC's Weapons Range needs is that routine day-to-day tasks shall be performed by the Contractor. Arrangements for manufacturer or other procured services to support occasional, extraordinary, or specialty requirements related to this work area shall be made by the

Contractor on a case-by-case basis considering cost effectiveness, schedule, or other requirements as approved by NUWC.

3. The Contractor shall maintain, check-out, calibrate, and operate all of AUTEC's Weapons Range instrumentation systems and equipment in accordance with the standards and practices established by applicable OCDs, locally prepared/approved Operating Maintenance Instructions (OMIs), and/or as delineated in maintenance and operation manuals provided by equipment manufacturers.

4. The Contractor shall abide by the AMS for all existing Weapons Range equipment. Preventative maintenance of new equipment will be based on manufacturer-recommended procedures and/or new AMS procedures to be developed by the Contractor.

5. The general approach to corrective maintenance of AUTEC's Weapons Range systems shall be to restore all equipment to operational status as quickly as possible by replacement of modules and sub-assemblies. The modules/sub-assemblies may then be repaired by either the Contractor or the manufacturer or others, whichever NUWC deems to be most cost effective.

6. The Contractor shall provide an adequate staff of persons qualified to perform the following tasks:

a. Develop and maintain an inventory of Government-provided consumables, expendables, and repair/spare parts for all Weapons Range instrumentation systems and equipment in accordance with the policies provided in Chapter XXI (1) of this Specification.

b. Provide technical support to Purchasing for procurement of Weapons Range instrumentation systems and equipment including: specification writing; technical evaluation of proposals; cost review; quality review; technical qualification of sources; preparation of inspection and acceptance procedures; and conduct of acceptance tests.

c. Diagnose system failures; restore system operation, and repair items as appropriate. These personnel shall be generally

capable of supporting engineering changes, preparing documentation, performing equipment

modifications, and installing and testing new equipment.

d. Study operational problems and recommend solutions including preparing or revising operating, installation, or maintenance documents. Periodically review documentation for accuracy. Update preventative/corrective maintenance documentation/practices when needed. Prepare training material and equipment installation checklists.

e. Investigate reliability, maintainability and/or performance problems with existing equipment and provide recommendations and other necessary support to SE&A (see Chapter XVI of this Specification) as required to assist in the correction of such deficiencies.

f. In accordance with procedures addressed in relevant OCDs, support AUTEC's Configuration Management and Configuration/Drawing Control Systems requirements as relate to Weapons Range instrumentation systems/equipment. Provide/maintain complete and accurate engineering drawings, equipment technical (operating, maintenance, etc.) manuals, parts lists, and other requisite documentation. Prepare/submit relevant Modification Proposals (Mod Props), Equipment Addition/Deletion Notices, Requests for Document Change, Document Change Notices, engineering cost estimates, etc.

g. Arrange for manufacturer or other procured support of Weapons Range instrumentation systems/equipment on a case-by-case basis considering cost effectiveness and mission critical requirements as approved by NUWC.

7. The Contractor shall develop/maintain/deliver all required drawings, equipment manuals, studies, failure investigations/analysis, and other documents discussed above, and others as may be requested by NUWC, in a timely manner. Delivered documents shall be complete and accurate.

8. The Contractor shall provide System Engineers for the in-water, radar, and HITS/STS/LATR/OASY systems. These full-time engineers shall be responsible for meeting scheduled test requirements, and shall be qualified to perform and/or oversee the following tasks for their respective systems/equipments:

a. Fault isolation.

b. Corrective actions.

c. System alignment/calibration.

d. New equipment installation and Operational Acceptance Testing.

e. Equipment modifications including pre-requisite modification proposals.

f. The conduct of special studies, and preparation of technical reports regarding equipment performance and improvement.

g. Preparation and review of technical documentation.

h. Providing technical assistance to the Systems Engineering and Analysis group.

i. Providing NUWC Work Order support.

j. Providing technical interface with NUWC/other activities.

9. The Contractor shall provide a training and qualification program for personnel assigned to operate and maintain Weapons Range in-air and in-water systems/equipment as described in OCD-(2.1)-22-XX. The Contractor shall additionally ensure that personnel assigned or tasked to perform maintenance, modifications, or repairs to equipment, which involves soldering, are certified in accordance with the provisions of OCD-(15.3)-00-XX. The Contractor shall maintain a record of all such training, qualifications, or certifications received by each individual. Personnel who have not been so qualified/certified shall not be permitted to conduct operations without supervision.

10. The Contractor shall assure that all Weapons Range systems/equipments are properly grounded and protected from lightning strike damage in accordance with procedures and requirements specified in MIL-HDBK-419A.

11. AUTEC's Site 7 is closed and unmanned. The Contractor shall monitor the physical condition of Site 7 on a quarterly basis

and report observations to NUWC.

12. The Contractor shall be responsible for following appropriate security guidelines for classification, identification, marking, and safeguarding of classified Weapons Range resources, etc. as dictated by the subject matter. The Contractor shall maintain accurate records for data accountability purposes. Specific requirements, including administrative, operational, physical, and personnel controls are set forth in Chapter XXIII of this Specification, the current DoD Contract Security Classification Specification (DD Form 254) as appearing in Section J, Attachment (8), of this Contract, and in appropriate Applicable Documents cited in paragraph F.

13. The Contractor shall submit all NUWC-required technical and administrative reports, described in Chapter XXV of this Specification, as pertain to support for AUTEC's Weapon Range instrumentation systems.

## D. WORKLOAD FACTORS

The Weapons Range data acquisition system workload is defined in terms of data acquisition hours (DAHs). Data acquisition hours encompass those periods of time, commencing when AUTEC is manned and ready, during which track data is acquired in support of an on-range test using any combination of in-water/in-air instrumentation systems.

During a single clock hour, one or more on-range tests may be conducted. Data acquisition hours are accumulated separately for each individual test. Data acquisition hours include the time necessary to secure instrumentation subsequent to a test, but do not include the additional time required for pre-test checkout/calibration or post-test processing. See OCD-(02.1)-13-XX.

The Weapons Range test workload estimates are provided in Chapter IV(1) of this Specification. In the event scheduled test requirements exceed the workload factors, government personnel may be used to augment operator staffing.

### 1. In-Water Instrumentation Systems

a. The Weapons Range in-water tracking and underwater communication system is required for the majority of Weapons Range testing.

b. Perform periodic system checks, preventive and corrective maintenance on the legacy in-water tracking and underwater communication system at Site 3 and Site 4.

c. The analog tape recorders will be operated on an as-required basis. The Contractor will be advised a minimum of 14 days in advance of such requirement.

d. The Acoustic Information Monitoring System (AIMS) will be operated and monitored at Site 1.

e. The ESM System is expected to average 25 data acquisition hours per month and will normally be operated in conjunction with in-air tracking systems. An operator will be required to perform system initialization and subsequent shut down procedures. It is estimated that these tasks will each require about 60 minutes. A dedicated operator is not required for routine testing where a preprogrammed scenario is run.

f. The AS3 is expected to average 20 data acquisition hours per month and will normally be operated in conjunction with in-air and in-water tracking systems. An operator will be required to perform system initialization and subsequent shut down procedures. It is estimated that these tasks will each require about 60 minutes. A dedicated operator is not required.

**2. In-Air Tracking Systems**

a. - - - - - - *deleted* - - - - - -

b. The RTR-II Surveillance Radar System at Site 2 will be operated on an as-scheduled basis. Dedicated operators are not required even when this radar is being utilized.

c. The Contractor shall be responsible for maintaining all three tracking radars, but will only be required to simultaneously operate (e.g. man) a maximum of two tracking radars at any one time. Radars 2B and 3D will be maintained in operational status at all times except during periods of Range Maintenance authorized by NUWC. Radar 2F will be made operational to support special engineering tests as tasked by NUWC Work Order or Letter of Direction. NUWC will provide sufficient advanced notice to allow the Contractor to incorporate any radar alterations required by such tests. Scheduling of specific radars to support test requirements will normally be at the discretion of the Contractor in order to allow manning and radar flexibility. Occasionally, special test circumstances may dictate the specific radars required. Such requirement(s) will be stated in the applicable Operations Directive(s).

Average workload radar test support requirements during the year can be satisfied with two track radars operating simultaneously.

Extended peak workload periods, of up to 30 days duration, requiring the simultaneous use of two track radars are estimated to occur twice per year. Such extended operations will be preceded, and followed, by minimized radar test support requirements for periods of 7 days or more. Shorter peak workload periods, of 1 to 10 days duration requiring the simultaneous use of two track radars, are expected to occur occasionally throughout the year.

The tracking radar workload is shown below:

| **ESTIMATED TRACKING RADAR WORKLOAD (Test Hours as Defined in OCD-(04.1)-20-XX) AND RADAR SYSTEM STATUS REQUIREMENTS** | | | | | |
|---|---|---|---|---|---|
| | | **AVG. MONTH** | | **PEAK MONTH** | |
| **Site No.** | **No. of Track Radar Systems Installed by Site No.** | **Required Radar Systems Status (2 radars manned simultaneously)** | **Total Estimated Test Hours** | **Required Radar Systems Status (2 radars manned simultaneously)** | **Total Estimated Test Hours** |
| 2 | 2 | 1 = Operational<br>1 = Operational*<br>- - - *deleted* - - - | 400 | 1 = Operational<br>1 = Operational*<br>- - - *deleted* - - - | 700 |
| 3 | 1 | 1 = Operational | | 1 = Operational | |
| *Radar 2F shall be made operational as required to support special test requirements. | | | | | |

d. - - - - - *deleted* - - - - -

e. The Sonobuoy Tracking System (STS) will average 115 data acquisition hours per month and will normally be operated in conjunction with HITS and/or the track radars, and the in-water tracking system. Dedicated operators are not required.

f. The Hyperbolic In-Air Tracking System (HITS) will average 125 data acquisition hours per month and will normally be operated in conjunction with the STS and in-water tracking systems. Dedicated operators are not required.

g. The GPS/LATR System is expected to average 125 data acquisition hours per month and will normally be operated in conjunction with the STS and in-water tracking systems. An operator will be required to perform system initialization and subsequent shut down procedures. It is estimated that these tasks will each require about 30 minutes. A dedicated operator is not required.

## E. KEY PERSONNEL/PERSONNEL QUALIFICATIONS

### 1. Key Personnel:

a. In-Water System Engineer

1. Minimum Number Required: 1

2. Education: BS Degree in Electronic Engineering or directly related technical field, with 5 years direct experience and increasing responsibilities as described below.

or:

Be a graduate of a formal two year course of study

in electronics, or have equivalent military training, with 10 years direct experience and increasing responsibilities as described below.

3. Experience: Have direct experience and increasing responsibility, in the design, modification, and/or maintenance of passive hydro-acoustic systems, including: hydrophones/transducers; data transmission; and analog and digital signal processing. Must be thoroughly familiar with all aspects of the propagation of sound in water. Must have experience working with deep-sea cabling, connectors, etc. Must have demonstrated experience with, and excellent knowledge of, troubleshooting/fault isolation methodology.

4. Other: Good oral and written communications skills are required.

b. Radar Systems Engineer

1. Minimum Number Required: 1

2. Education: BS Degree in Electronic Engineering or directly related technical field, with 5 years direct experience and increasing responsibilities as described below.

or:

Be a graduate of a formal two year course of study in electronics, or have equivalent military training, with 10 years direct experience and increasing responsibilities as described below.

3. Experience: Have direct experience and increasing responsibility in the design, modification, and/or maintenance of mono-pulse surveillance and target tracking radar systems, including: analog and digital R/F transmitter/receiver circuits; antennas and feeds; displays; optics; analog/digital encoders; system alignments; etc. Must be thoroughly familiar with radar theory. Must have demonstrated experience with, and excellent knowledge of, trouble shooting/fault isolation methodology.

4. Other: Good oral and written communications skills are required.

c. STS/HITS/LATR/OASYS System Engineer:

1. Minimum Number Required: 1

2. Education: BS Degree in Electronic Engineering or directly related field, with 5 years direct experience and increasing responsibilities as described below.

or:

Be a graduate of a formal two year course of study in electronics, or have equivalent military training, with 10 years direct experience and increasing responsibilities as described below.

3. Experience: Have direct experience and increasing responsibility in the design, modification, or maintenance of sensitive low-power VHF/UHF FM/AM RF receiver systems, including: antennas; analog/digital circuits; signal amplifiers; micro-processor based RF signal processors; etc. Must have at least a working knowledge of RF multilateration, interferometer, or GPS receiver design. Must have demonstrated micro-processor programming experience. Must be thoroughly familiar with RF propagation theory. Must have demonstrated experience with, and excellent knowledge of, troubleshooting/fault isolation methodology.

4. Other: Good oral and written communications skills are required.

2. Personnel Qualifications

a. In-Water System Technician(s) To successfully execute the responsibilities and tasks implied, the person(s) assigned should as a minimum:

1. Be a graduate of a formal two year course of study in electronics, or have equivalent military training.

2. Have 5 years experience and excellent knowledge of analog and digital electronic signal processing systems design and troubleshooting methods. Have experience/working knowledge of deep sea cabling, connectors, etc.

3. Have good verbal and written communications skills.

b. STS/HITS System Technician(s) To successfully execute the responsibilities and tasks implied, the person(s) assigned should as a minimum:

1. Be a graduate of a formal two year course of study in electronics, or have equivalent military training.

2. Have 5 years experience and excellent knowledge of VHF/UHF AM/FM receiver circuity design and troubleshooting methods and micro-processor based signal processing systems. Have experience/working knowledge of RF multilateration, interferometer, or GPS receiver systems.

3. Have good verbal and written communications skills.

## F. APPLICABLE DOCUMENTS

| | |
|---|---|
| MIL-HDBK-419A; | Grounding, Bonding, and Shielding for Electronic Equipment and Facilities |
| OCD-(02.1)-01-XX; | In-Water Tracking System General Setup |
| OCD-(02.1)-02-XX; | Sonobuoy Tracking System |

| | |
|---|---|
| OCD-(02.1)-03-XX; | In-Water System Tape Recorder Operation Setup for Sites 1,3, and 4 |
| OCD-(02.1)-04-XX; | Dual Acoustical Interface Measurement Systems (AIMS) |
| OCD-(02.1)-05-XX; | AUTEC Tracking Radars |

- - - - - - *deleted* - - - - - -

| | |
|---|---|
| OCD-(02.1)-07-XX; | Radar System Radiation Control and High Voltage Hazards |
| OCD-(02.1)-11-XX; | AN/WQC-2A Sonar Communication Set |
| OCD-(02.1)-13-XX; | In-Water Tracking System F-1 and F-Day Checkout Procedures |
| OCD-(02.1)-22-XX; | Range Instrumentation Equipment Operator Certification Program |
| OCD-(15.3)-00-XX; | Soldering Certification Program |
| Other OCDs; | Relevant/Related OCDs as may be listed in Table XV-4 |
| APP 1-98G; | Mail Services, AUTEC Project |
| APP 4-11G; | Access Control: AUTEC Project Personnel and Visitors or Personal Guests at NUWCDETAUTEC Facilities |
| APP 4-13G; | Key and Lock Control Program |
| APP 7-8G; | Gasoline, Fuel Oils and Lubricants; Consumption and Control |
| APP 11-3G; | Fire Protection Policy |
| APP 11-5G; | Hurricane Plan, Andros Ranges |

OMI 81-2; AUTEC Instrumentation Radar System (AIRS)

- - - - - - *deleted* - - - - - -

| | |
|---|---|
| OMI 93-1; | RTR-II Radar |
| OMI 96-1; | AUTEC Instrumentation Radar System (AIRS) Solid State Track Radar (SSTR) Check and Adjustment Manual for SSTR #2 |
| HITS DOCUMENT; | Hyperbolic In-Air Tracking System (HITS) Technical and Operations Manual |
| HITS DOCUMENT; | HSS 2000 Documentation Package |
| HITS DOCUMENT; | Beacon PPC Assembly and Altitude Encoder Assembly, Installation Instructions |
| HITS DOCUMENT; | HSS-2000 HITS Slave Station Technical Manual |
| ESM DOCUMENT | AUTEC ELECTRONIC SUPPORT MEASUREMENT (ESM) TARGET GENERATOR SYSTEM (TGS) TRAINING COURSE 296-9210003 |
| ESM DOCUMENT | AUTEC PORTABLE CEESIM TRAINING COURSE 296-9210003 |
| ESM DOCUMENT | AUTEC ESM TGS Operation and Maintenance Manual: 296-9120001, Rev A |
| ESM DOCUMENT | AUTEC ESM TGS User's Manual Document Number: 296-9210002, Rev A |

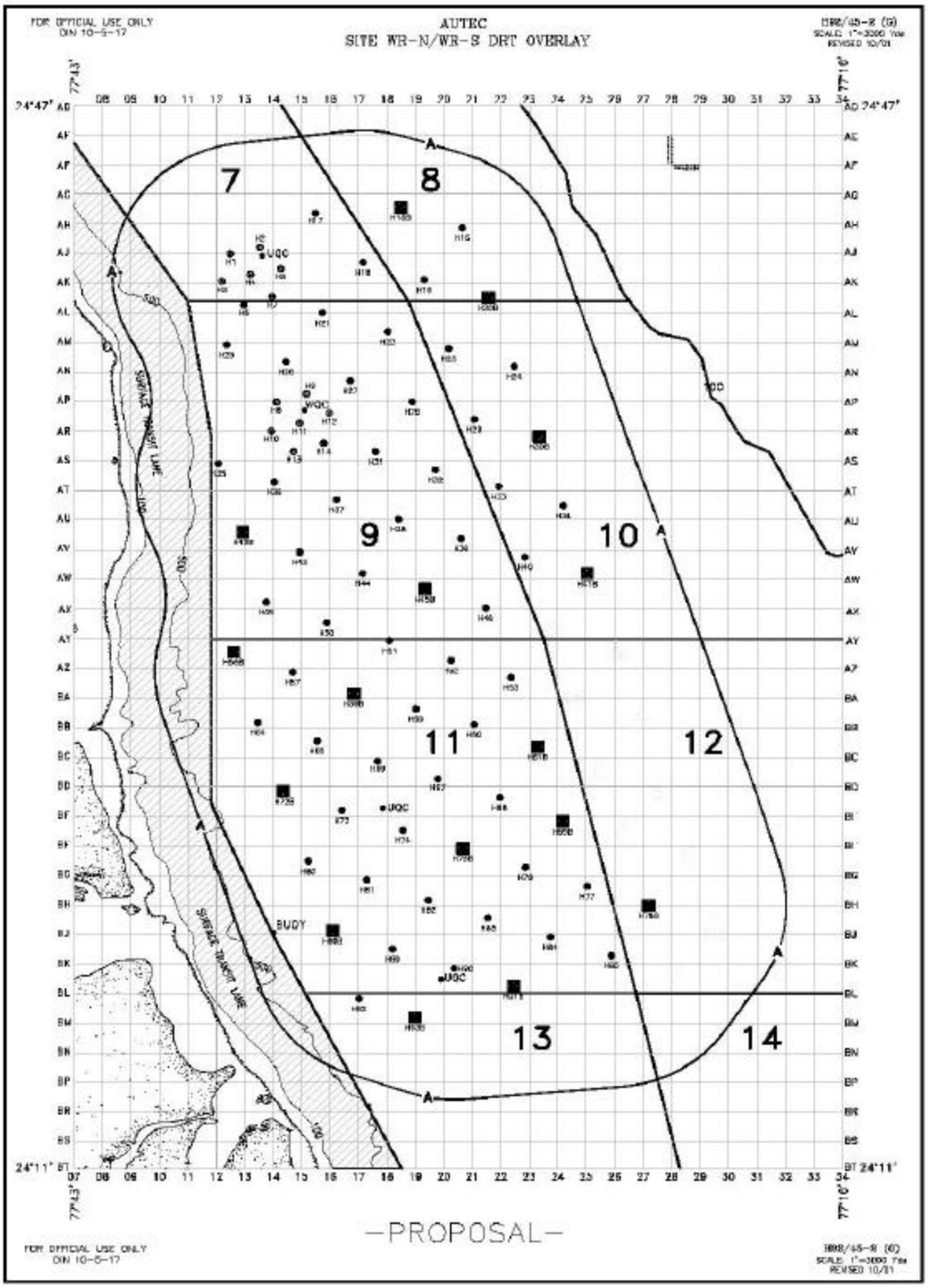


Figure II-1
AUTEC In-Water Hydrophone Arrays

Figure II-1
AUTEC In-Water Hydrophone Arrays

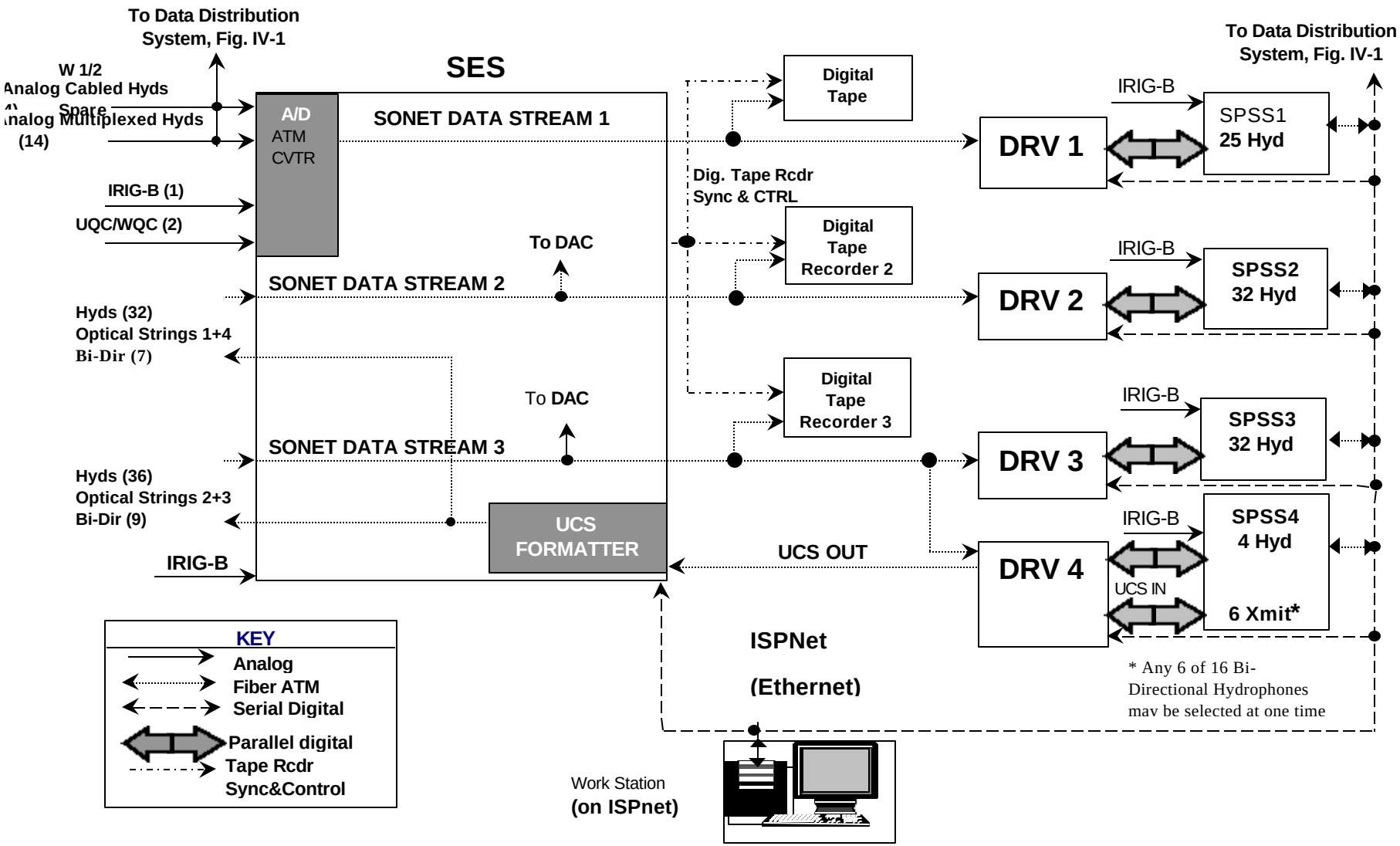


Figure II-2a
Real Time In-Water Tracking Systems

Figure II-2a

Real Time In-Water Tracking System

ns

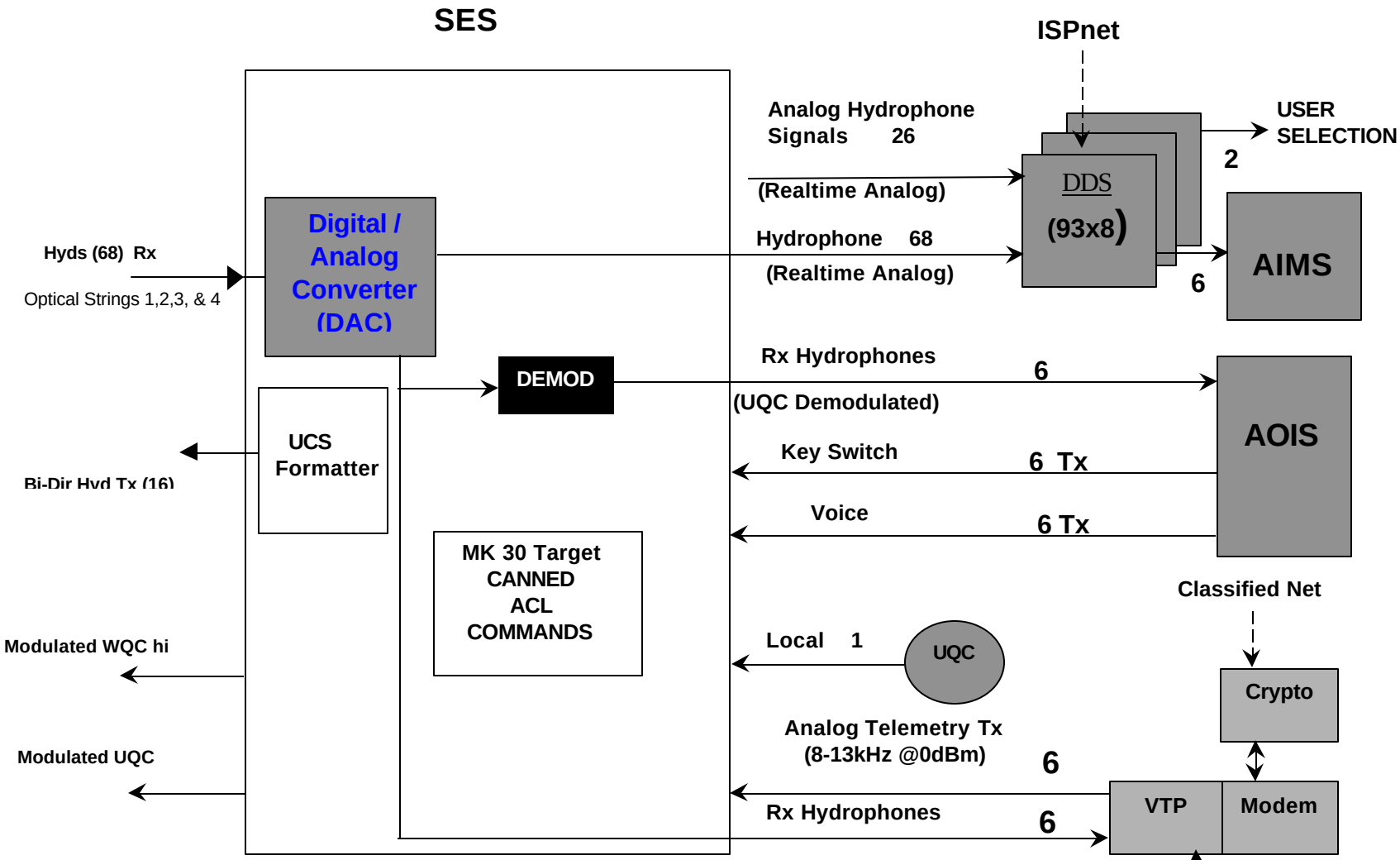


Note: Numbers shown indicate maximum simultaneously selectable channels

Figure II –2b
Underwater Communications System Block Diagram

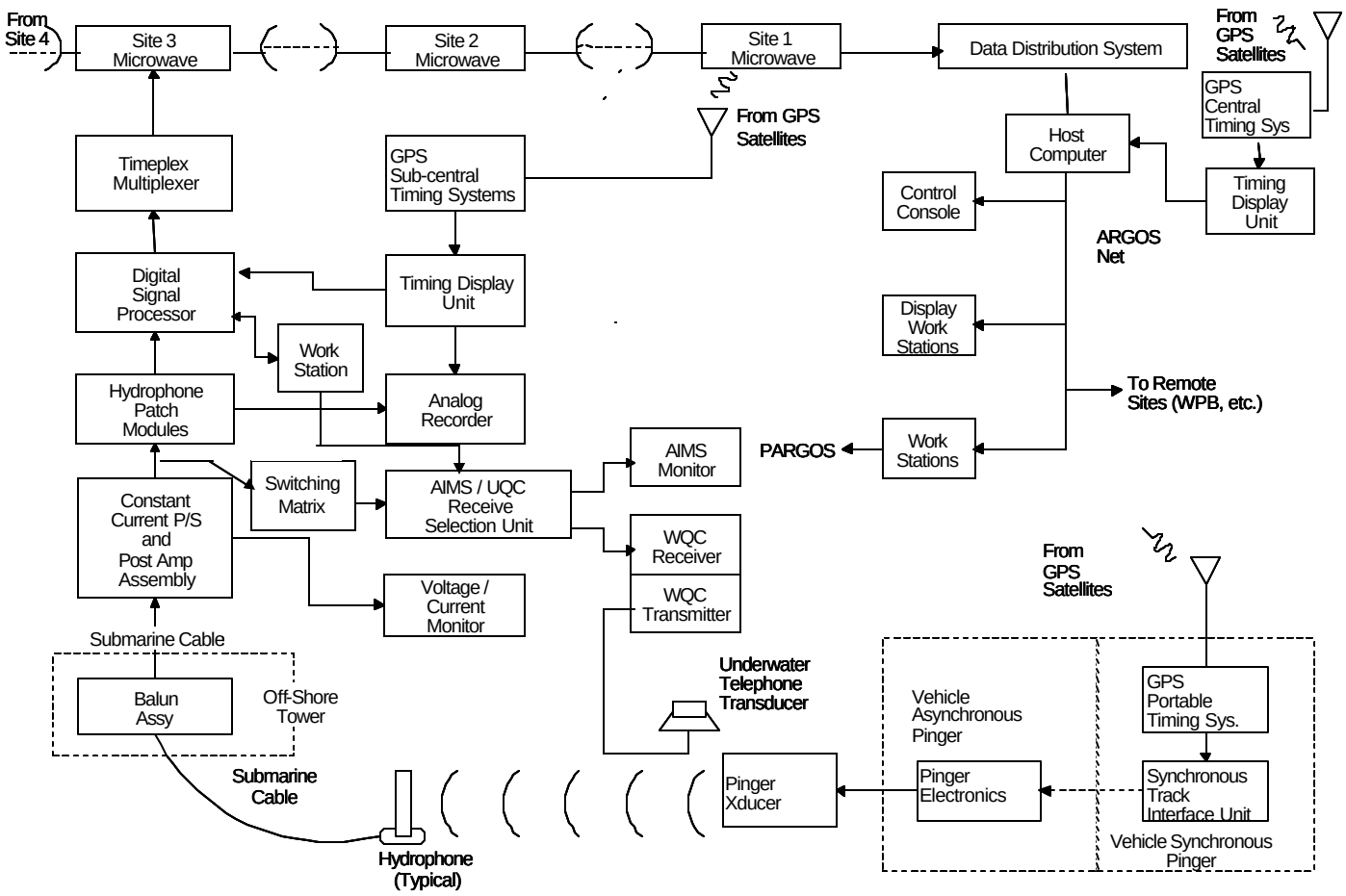


Figure II-2c
Legacy Weapons Range In-Water System

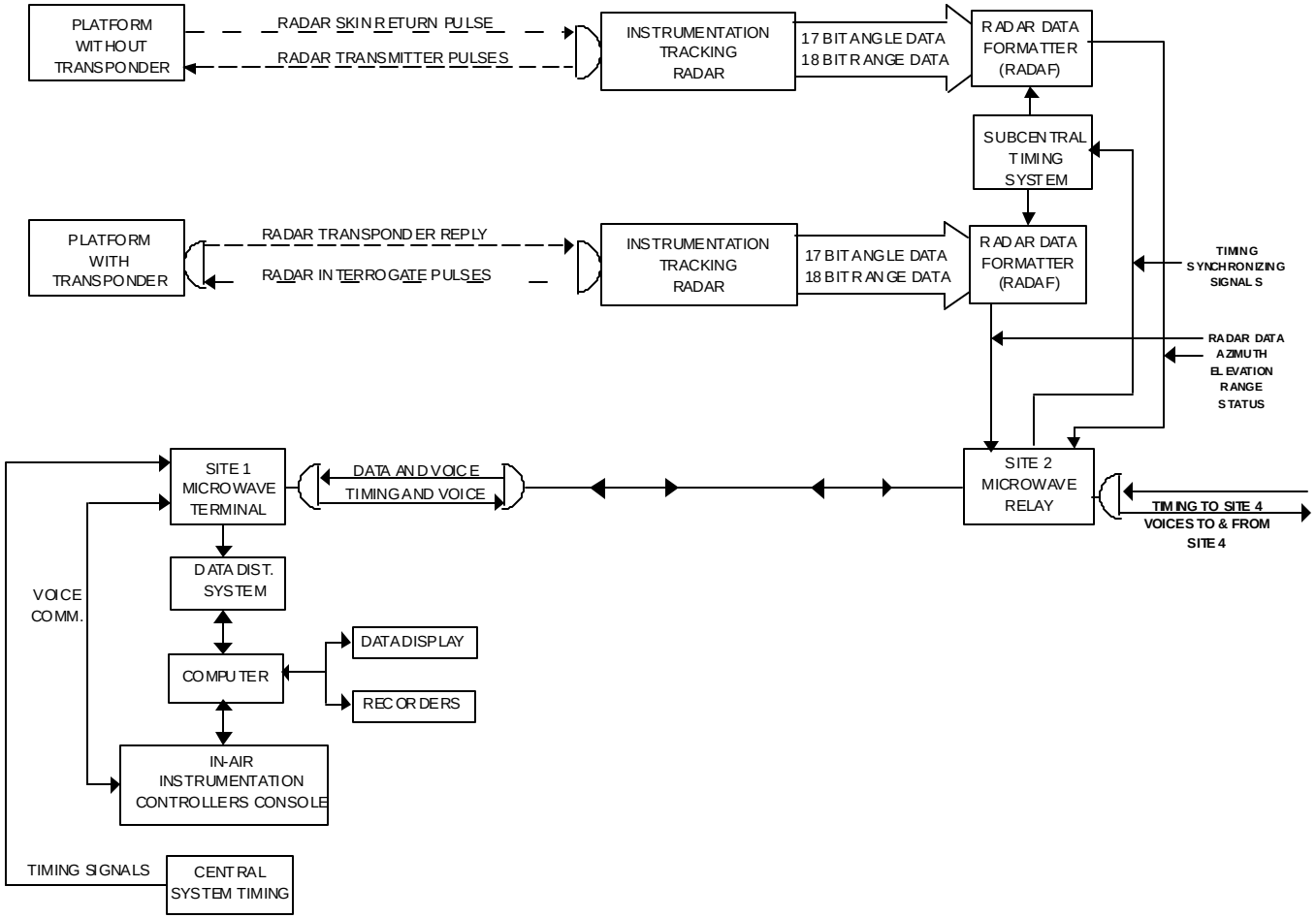


Figure II-3
Radar Tracking System

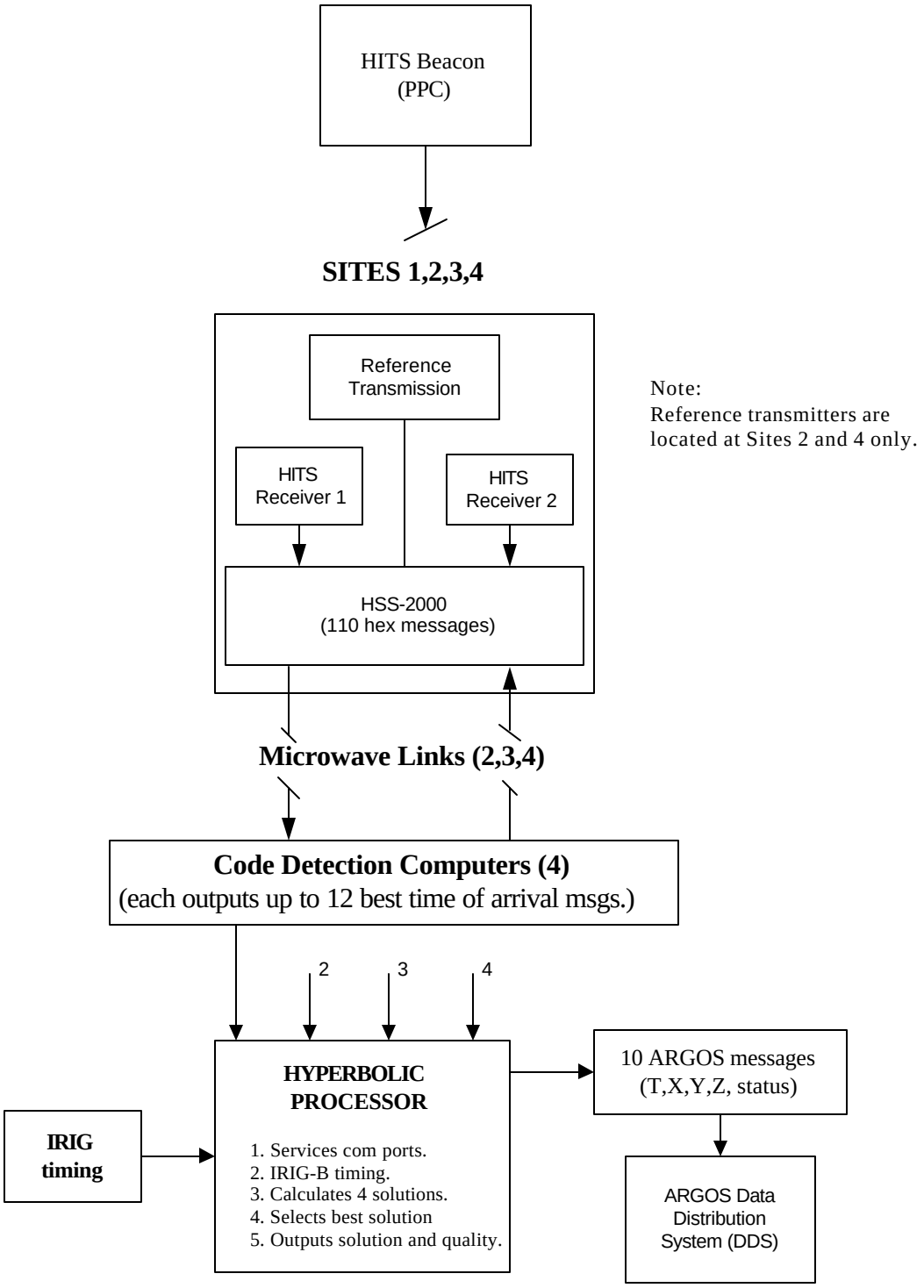


Figure II-4
HITS Block Diagram

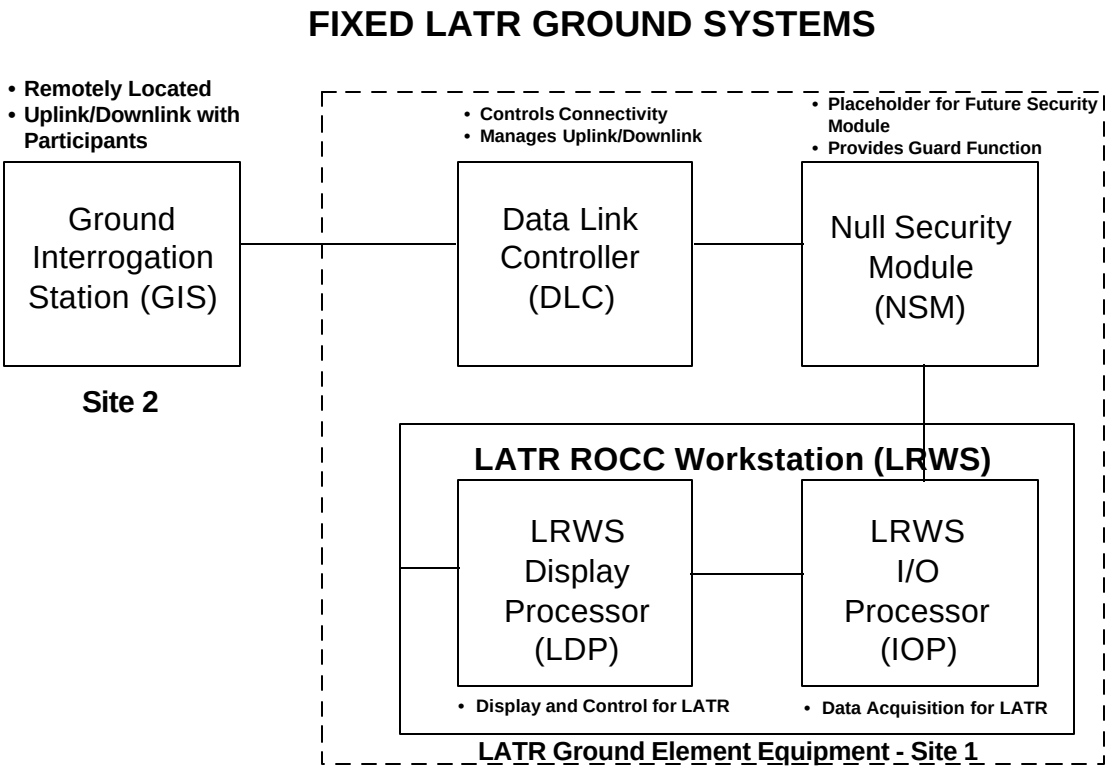


Figure II-5
Fixed LATR Ground Systems

Figure II-6
HITS Area of Coverage

# ESM SYSTEM BLOCK DIAGRAM

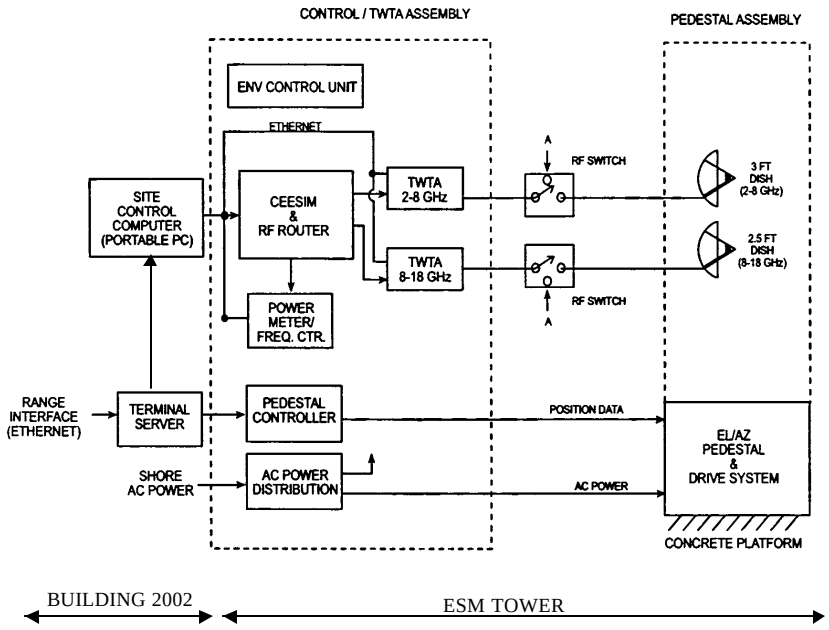


Figure II-7
EMS Block Diagram

Figure II-7
EMS Block Diagram

10/09/2001

# AS3 SYSTEM DIAGRAM

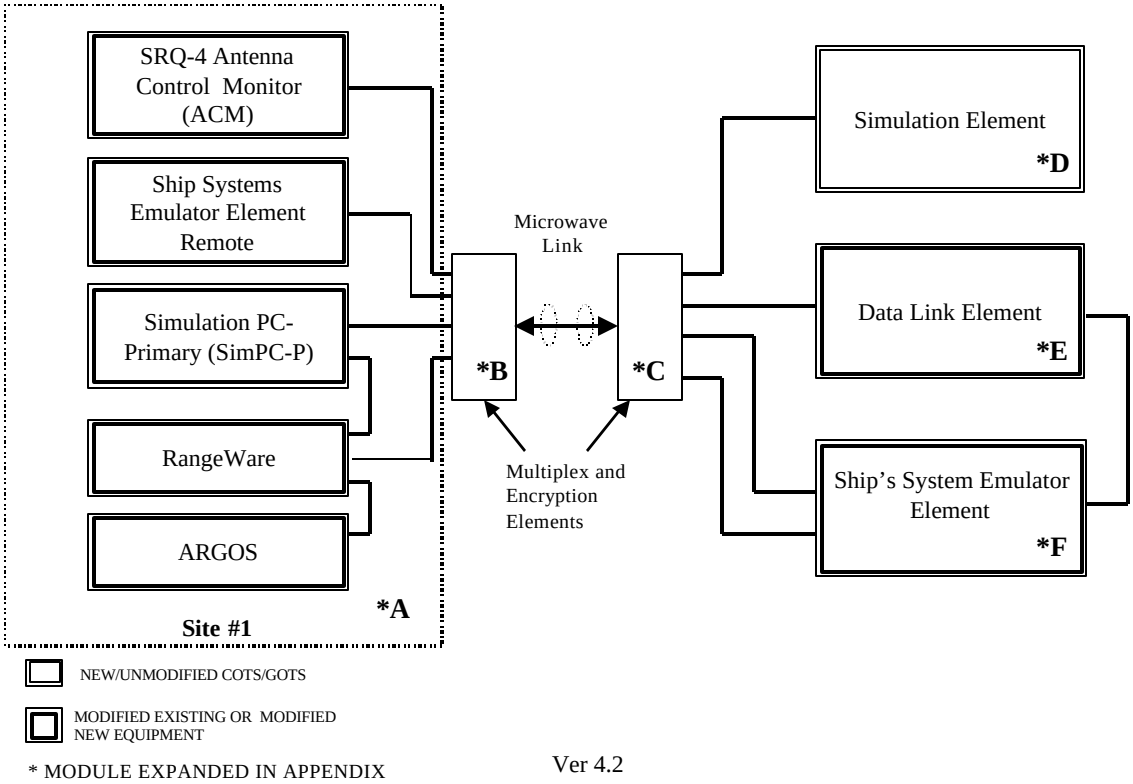


Ver 4.2

Figure II-8
AS3 Block Diagram

WEAPONS RANGE EQUIPMENT

| Equipment | Mfr | Qty |
|---|---|---|
| SITE 1 | | |
| - - - - - - - *deleted* - - - - - - - | | |
| Signal Processor | NUWC | 1 |
| UNIX WorkStation | SGI | 1 |
| Analog Recorder | Thorne | 1 |
| Acoustic Command Link Controller (for MK-30 Mobile Target) | MacIntosh/Apple | 3 |
| Radar Video Digitizer Receiver | Folsom | 1 |
| Radar Video Display Terminal 15” | Electrohome | 1 |
| Main STS Computer System | HP (Series 9000, model 330M) | 2 |
| STS 9-Track Tape Drives | HP (7979A) | 2 |
| AHRP Digital Recorder | Ampex DIS-162I | 3 |

Table II-1

# WEAPONS RANGE EQUIPMENT

| Equipment | Mfr | Qty |
|---|---|---|
| SITE 1 (Cont.) | | |
| Acoustic Information Monitoring System (AIMS) | AUTEC | 1 |
| U/W Communications System, AN/WQC-2A | ITT | 2 |
| HITS X-band Receiver | AUTEC | 2 |
| HITS X-band Reference Transmitter | Vega | 1 |
| HITS HSS-2000 Signal Processor | Mnemonics | 1 |
| HITS Code Detection Unit | CompuAdd | 4 |
| HITS Communication Multiplexor | S. I. Tech | 1 |
| HITS Hyperbolic Processors | CompuAdd | 2 |
| LATR Display Processor | SAIC | 2 |
| LATR Input/Output Processor | SAIC | 1 |
| LATR Data Link Controller | SAIC | 1 |
| LATR Null-Security Module | SAIC | 1 |
| LATR Range Operations Control Console Workstation | SAIC | 2 |
| Color Monitor, 19” | HP | 4 |
| Printer, Laserjet | HP | 2 |
| Autoscanning Color Printer | Mitsubishi | 2 |
| Digitizing Tablet 12 x 18 | GTCO | 2 |
| MX9112 Differential GPS Receiver | Leica | 1 |
| 40T Optical Jukebox | HP | 2 |
| HP-742rt VME-Form Computer | HP | 1 |
| HP-747 VME-Form Computer | HP | 1 |
| HP-755 VME-Form Computer | HP | 1 |
| CEESIM | Amherst | 1 |
| TWTA – Power Amplifiers | ETM | 2 |

Table II-1

| | | | |
|---|---|---|---|
| PC w/ Windows NT | | Micron | 1 |
| Web based hard drive | | Snap Server | 2 |
| El/Az Pedestal with Riser/ Pedestal Controller | Orbit | 1 | |

Note: Additional Site 1 Weapons Range equipment are listed in appropriate Chapters within this Specification.

Table II-1 (Cont.)

# WEAPONS RANGE EQUIPMENT

| Equipment | Mfr | Qty |
|---|---|---|
| DOWNRANGE SITE 2 | | |
| AUTEC Tracking Radar (AIRS) (X-band) w/Digital Interface Equipment | (Modified by AUTEC) | 2 |
| Digital Encoder | ITEK Measurement Systems | 4 |
| AUTEC Closed Circuit TV | | |
| 1.Television Monitor | Panasonic | 2 |
| 2.Television Camera | RCA | 2 |
| 3.Telephoto Lens | ZOMAR | 2 |
| AUTEC Surveillance Radar (X-band) | AUTEC | 1 |
| - - - - - - - *deleted* - - - - - - - | | |
| 400 Hz Solid State Power Supply | Unitron | 2 |
| - - - - - - - *deleted* - - - - - - - | | |
| Digital Oscilloscope | Tektronix | 2 |
| 2 Channel Strip Chart Recorder | Astro Med | 2 |
| Sonobuoy Tracking Receiver System | Cubic | 1 |
| Radar Video Digitizer Transmitter | Folsom | 1 |
| HITS X-band Receiver | AUTEC | 2 |
| HITS HSS-2000 Signal Processor | Mnemonics | 1 |
| LATR Ground Interrogation Station | SAIC | 2 |
| AN/URY-3 Transceivers | Microcom | 4 |

Table II-1 (Cont.)

| | | |
|---|---|---|
| | | JA1-47<br>N61339-97-C-0001<br>P00077 |
| 2712 Spectrum Analyzer | Tektronix | 1 |

Table II-1 (Cont.)

| Equipment | Mfr | Qty |
|---|---|---|
| Uninterruptable Power Supply | Best | 1 |
| MX9112 Differential (GPS Receiver) | Magnavox | 1 |
| HP742 rt VME-Form Computers | Hewlett Packard | 2 |

Table II-1 (Cont.)

# WEAPONS RANGE EQUIPMENT

| Equipment | Mfr | Qty |
|---|---|---|
| DOWNRANGE SITE 3 | | |
| Signal Processor | NUWC | 1 |
| UNIX WorkStation | SGI | 1 |
| Data Translator Controller | AUTEC | 1 |
| U/W Communications System, AN/WQC-2A | ITT | 1 |
| Off-Shore Platform | ITT | 1 |
| Analog Tape Recorder | Thorn EMI | 1 |
| Acoustic Information Monitoring System (AIMS) | AUTEC | 1 |
| Tape Degausser, Model 515 | Computer Link | 1 |
| Shore Terminal Power Supply SCR 10/105-5-OV | Elex-Measurement | 2 |
| - - - - - - *deleted* - - - - - - | | |
| - - - - - - *deleted* - - - - - - | | |
| Sonobuoy Tracking Receiver System | Cubic | 1 |
| - - - - - - *deleted* - - - - - - | | |
| Digital Oscilloscope | Tektronix | 1 |
| HITS X-band Receiver | AUTEC | 2 |

Table II-1 (Cont.)

Table II-1 (Cont.)

WEAPONS RANGE EQUIPMENT

| Equipment | Mfr | Qty |
|---|---|---|
| DOWNRANGE SITE 3 (Cont.) | | |
| HITS HSS-2000 Signal Processor | Mneumonics | 1 |
| HITS X-band Transponder | Vega | 1 |
| AUTEC Tracking Radar (AIRS) (X-band) w/Digital Interface Equipment | (Modified by AUTEC) | 1 |
| Digital Encoder | ITEK Measurement Systems | 2 |
| AUTEC Closed Circuit TV | | |
| 1.Television Monitor | Panasonic | 1 |
| 2.Television Camera | RCA | 1 |
| 3.Telephoto Lens | ZOMAR | 1 |
| 400 Hz Solid State Power Supply | Unitron | 2 |
| - - - - - - *deleted* - - - - - - | | |
| Digital Oscilloscope | Tektronix | 2 |
| - - - - - - *deleted* - - - - - - | | |

Table II-1 (Cont.)

WEAPONS RANGE EQUIPMENT

| Equipment | Mfr | Qty |
|---|---|---|
| DOWNRANGE SITE 4 | | |
| - - - - - - *deleted* - - - - - - | | |
| - - - - - - *deleted* - - - - - - | | |
| Transistor Float Rectifier A48TFR50T | Warren, Mfg. Co., Inc. | 1 |
| Signal Processor | NUWC | 1 |
| UNIX WorkStation | SGI | 1 |
| Data Translator Controller | AUTEC | 1 |
| U/W Communications System, AN/WQC-2A | ITT | 1 |
| Off-Shore Platform | ITT | 1 |
| Analog Tape Recorder | Thorn EMI | 1 |
| Acoustic Information Monitoring System (AIMS) | AUTEC | 1 |
| Tape Degausser, Model 515 | Computer-Line | 1 |
| Shore Terminal Power Supply SCR 10/150-5-0V | Elex-Measurements | 2 |
| - - - - - - *deleted* - - - - - - | | |
| - - - - - - *deleted* - - - - - - | | |
| Radar Transponder AN/DPN-78 | Vega | 2 |

Table II-1 (Cont.)

Table II-1 (Cont.)

WEAPONS RANGE EQUIPMENT

| Equipment | Mfr | Qty |
|---|---|---|
| DOWNRANGE SITE 4 (cont.) | | |
| Sonobuoy Tracking Receiver System | Cubic | 1 |
| HITS X-band Reference Transmitter | AUTEC | 1 |
| HITS X-band Receiver | AUTEC | 2 |
| HITS HSS-2000 Signal Processor | Mneumonics | 1 |

Table II-1 (Cont.)

# II. RANGE DATA ACQUISITION SYSTEMS (CONT.)

## 2. ACOUSTIC TESTING

### A. GENERAL

The Acoustic Testing function covers a wide span of in-water acoustic measurements. Typically, a measurement will require the deployment of calibrated acoustic sensors, the controlled acquisition and recording of data, real-time and/or post-test data processing and analysis, and finally the reporting of test results. Typical devices for which acoustic signatures are collected and analyzed include: torpedoes; vessels; unmanned underwater vehicles; buoyantly propelled test vehicles; acoustic countermeasure devices; and sonar systems. Acoustic measuring/monitoring systems at AUTEC include: a Deployable Noise Measurement (DNM) System; a Portable Sonobuoy Measurement System (PSMS); and a Portable Measurement System (PMS). The Acoustic Testing function also includes the collection, processing, and analysis of oceanographic, environmental, ambient noise, and bathymetric data.

### B. DESCRIPTION

#### 1. Deployable Noise Measurement System (DNM).

DNM consists of a ship-deployed vertical array of acoustic sensors and shipboard electronics installed in a portable van. The DNM System is normally maintained at Site 1 and is used to support tests in the TOTO area. The system was originally designed to make signature measurements for weapon silencing programs. However, the system is presently used to acquire acoustic data from a variety of other sources. Real-time tracking is required to provide positional and range-correction data for DNM testing. Tracking is provided either by the AUTEC in-water tracking systems or by a shipboard slant-ranging system located in the shipboard electronics van. When utilizing the shipboard slant-ranging system, special in-water tracking pingers must be installed on test vehicles to provide the synchronous track required. Figure II-7 shows the DNM System Block Diagram. The main subsystems are described below:

a. The DNM array consisting of a vertical line array with in-water electronics, two omni hydrophones, a tracking pinger and a weight to keep the array vertical.

b. A 2500 foot electromechanical cable which transmits data to the Shipboard Electronics System.

c. The Shipboard Electronics System which provides power and calibration signals to the array sensors.

d. The Data Acquisition and Processing System which filters, amplifies and records the acquired data on magnetic media in real-time and processes the data from tape, post-test, for required reports.

e. The Shipboard Quiet Inverter System which provides "quiet" power to both the measurement vessel and the DNM shipboard electronics during acoustic signature measurements to prevent contamination of the data by ship's own power (both electrical and mechanical).

f. DNM data analysis software which resides on a PC, as described in Chapter VI(1) of this Specification.

**2.** ***- - - - - - deleted - - - - - -***

**3. Portable Sonobuoy Measurement System (PSMS).**

This system, shown in Figure II-9, records and processes ambient noise and acoustic signatures gathered and retransmitted by sonobuoys.

The receiving station is comprised of a sonobuoy RF receiver, pulse code modulator, video cassette recorder, spectrum analyzer and plotter. This equipment is located in the Acoustic Test Control Center within the Command and Control Building at Site 1, however a battery powered version of this system can be used for test operations at remote locations.

**4. Portable Measurement System (PMS)**

PMS is a simple, lightweight, battery-powered system designed for acquiring ambient environmental data, measuring acoustic levels of active sonar devices, and making acoustic signature measurements. The system is typically deployed from an AUTEC range vessel with all shipboard machinery secured, but may also be deployed at other locations as required.

The PMS configuration is shown in Figure II-10. PMS consists of a single omnidirectional hydrophone which can be deployed to a maximum depth of 1000 feet. Data is processed/displayed in real-time using a spectrum analyzer while simultaneously recording on digital audio tape to allow for post-test analysis. Acoustic spectra are typically stored and plotted in narrowband format via a notebook computer. With the use of other existing Acoustic Testing equipment, data can later be processed and plotted in a variety of formats (i.e. 1/3 octave, strip chart, LOFAR, etc.).

**5. General.**

Acoustic tests which require in-water track data may be conducted on any of AUTEC's 3-D ranges, although normally they are supported by the Site 1/2 acoustic tracking system. An acoustic pinger is installed on the test platform and track data are determined by the Weapons Range tracking system. Surface vessels and helicopters are tracked by HITS or radar. Recorded X, Y, Z, time, and target ID data are subsequently used for correction of acoustic data. For weapon's silencing test programs, or other programs requiring the launching of test vehicles from AUTEC range craft, launcher support (see also Chapter IX(2) of this Specification) will be required.

In addition to the specific systems described above, a variety of general purpose equipment and several environmental measurement systems are available to support AUTEC test programs. A representative list of equipment is provided in Table II-2. Actual inventory is as provided by NUWC.

## C. CONTRACTOR RESPONSIBILITIES

1. The Contractor shall maintain all of AUTEC's acoustic testing and environmental measurement systems and equipment in an operational status except during scheduled range maintenance periods authorized by NUWC. The Contractor shall ensure that routine preventative maintenance is conducted on a not-to-interfere basis with scheduled operational requirements. All acoustic testing and environmental measurement equipment will be manned and operated in accordance with the AUTEC Schedule of Operations, published Operations Directives, Workload Factors given in paragraph D, Applicable Documents cited in paragraph F, and other requirements stated below. Special requirements may be tasked by NUWC Work Order or Letter of Direction.

2. The general approach to accomplishing AUTEC's acoustic testing and environmental measurement needs is that routine day-to-day tasks shall be performed by the Contractor. Arrangements for manufacturer or other procured services, or for leased/borrowed equipment to support occasional, extraordinary, or specialty requirements related to this work area shall be made by the Contractor on a case-by-case basis considering cost effectiveness, schedule, or other requirements as approved by NUWC.

3. The Contractor shall maintain, check-out, calibrate, and operate all of AUTEC's acoustic testing and environmental measurement systems and equipment in accordance with the standards and practices established by applicable OCDs and/or as delineated in maintenance and operation manuals provided by equipment manufacturers.

4. The Contractor shall abide by the AMS for all existing equipment. Generally, equipment operators shall be capable of performing preventative maintenance. Preventative maintenance of new equipment will be based on manufacturer-recommended procedures and/or new AMS procedures to be developed by the Contractor.

5. The general approach to corrective maintenance of AUTEC's acoustic testing and environmental measurements systems and equipment shall be to restore all equipment to operational status as quickly as possible by replacement of modules

and sub-assemblies. The modules/sub-assemblies may then be repaired by either the Contractor or the manufacturer or others, whichever NUWC deems to be most cost effective.

6. The Contractor shall provide an adequate staff of persons qualified to perform the following tasks:

a. Develop and maintain an inventory of Government-provided consumables, expendables, and repair/spare parts for all acoustic testing and environmental measurement equipment in accordance with the policies provided in Chapter XXI(1) of this Specification.

b. Provide technical support to Purchasing for procurement of acoustic testing and environmental measurement system equipment including: specification writing; technical evaluation of proposals; cost review; quality review; technical qualification of sources; preparation of inspection and acceptance procedures; and conduct of acceptance tests.

c. Diagnose system failures; restore system operation, and repair items as appropriate. These personnel shall be generally capable of supporting engineering changes, preparing documentation, performing equipment modifications, and installing and testing new equipment.

d. Study operational problems and recommend solutions including preparing or revising operating, installation, or maintenance documents. Periodically review documentation for accuracy. Update preventative/corrective maintenance documentation/practices when needed. Prepare training material and equipment installation checklists.

e. Investigate reliability, maintainability and/or performance problems with existing equipment and provide recommendations and other necessary support to SE&A (see Chapter XVI of this Specification) as required to assist in the correction of such deficiencies.

f. In accordance with procedures addressed in relevant OCDs, support AUTEC's Configuration Management and

Configuration/Drawing Control Systems requirements as relate to acoustic testing and environmental measurement systems/equipment. Provide/maintain complete and accurate engineering drawings, equipment technical (operating, maintenance, etc.) manuals, parts lists, and other requisite documentation. Prepare/submit relevant Modification Proposals (Mod Props), Equipment Addition/Deletion Notices, Request for Document Change, Document Change Notices, engineering cost estimates, etc..

g. Arrange for manufacturer or other procured support of acoustic testing and environmental measurement equipment on a case-by-case basis considering cost effectiveness and mission critical requirements as approved by NUWC.

7. The Contractor shall develop/maintain/deliver all required drawings, equipment manuals, studies, failure investigations/analysis, and other documents discussed above, and others as may be requested by NUWC, in a timely manner. Delivered documents shall be complete and accurate.

8. The Contractor shall provide a lead Acoustic Test Engineer, proficient in all aspects of acoustic signature data collection and analysis as relates to the radiated noise emanated by underwater vehicles. This individual shall be responsible for the design and conduct of all radiated noise trials and environmental measurements, directing and overseeing any equipment requirements/modifications/configurations or unique analysis of Range User or NUWC-specified data, and for preparing requisite analysis and reports. This individual, assisted by others, shall be qualified to perform and/or oversee the following tasks:

a. Fault isolation.

b. Corrective maintenance.

c. System alignment/calibration.

d. New equipment installation and Operational Acceptance Testing.

e. Equipment modifications including pre-requisite

modification proposals.

f. The conduct of special studies, and preparation of technical reports regarding equipment performance and improvement.

g. Systems software programming and program maintenance.

h. Preparation and review of technical documentation.

i. Providing technical assistance to Systems Engineering and Analysis.

j. Providing NUWC Work Order support.

k. Providing technical interface with NUWC/other activities.

9. The Contractor shall be responsible for the post-test analysis, production, and delivery of finished data products, of professional quality, to designated recipients in a timely manner (or as scheduled by applicable OD).

10. The Contractor shall maintain a library of archived test data consisting of test-specific software, raw data, plots, electronic media, deliverables, etc. With the concurrence of NUWC, the Contractor shall establish procedures for inventory and periodic data purging, media degaussing, and media recertification.

11. The Contractor shall be responsible for following appropriate security guidelines for classification, identification, marking, and safeguarding of classified acoustic test resources, etc. as dictated by the subject matter. The Contractor shall maintain accurate records for data accountability purposes. Specific requirements, including administrative, operational, physical, and personnel controls are set forth in Chapter XXIII of this Specification, the current DoD Contract Security Classification Specification (DD Form 254) as appearing in Section J, Attachment (8), of this Contract, and in appropriate Applicable Documents cited in paragraph F.

JA1-58
N61339-97-C-0001
P00090

12. The Contractor shall submit all NUWC-required technical and administrative reports, described in Chapter XXV of this Specification, as pertain to support for AUTEC's acoustic testing and environmental measurements function.

## D. WORKLOAD FACTORS

### 1. Deployable Noise Measurement System (DNM).

a. The following tasks shall be performed for each test requiring the DNM system:

1. Acoustic Test Conductor/Engineer: Responsible for all shore-site test operations, positions test vessels when tracked by an AUTEC in-water/in-air tracking system, communicates with personnel operating the DNM at-sea system, ensures shore-based post-test data processing systems are operational and configured in accordance with Range User requirements.

2. At-Sea Acoustic Test Engineer: Determines DNM system configuration for special tests, acts as the single point-of-contact onboard the measurement platform for acoustic testing, responsible for all at-sea test operations, capable of performing any of the operator positions described below.

3. Data Acquisition/Processing System Engineer: Performs pretest checkouts and calibration, controls data acquisition, records data on various media, makes real-time software changes as required, performs post-test processing and maintains operator logs.

4. Shipboard Electronics Technician: Performs pretest checkouts, assists with calibration, monitors DNM system during data acquisition and maintains operator logs.

5. Array Handler/Quiet Inverter Operator: Responsible for shipboard equipment configuration, assembles array components, supervises array deployment and retrieval, ensures proper array handling and storage, operates quiet power inverters.

6. Post-processing System(s) Operator(s): Performs post-test processing, as required, using: Analog/Digital Recorder Systems; the Scientific Atlanta LOFAR System; the Strip Chart Recorder System; and/or the PC/Spectrum Analyzer Station.

b. See Chapter IV(1) of this Specification for estimation of number/duration of tests involving the DNM system.

**2.** ***- - - - - - deleted - - - - - -***

**3. Portable Sonobuoy Measurement System (PSMS) and Portable Measurement System (PMS)**

a. Typically, either system requires two real-time operators.

b. These systems may occasionally be required to operate simultaneously. Either system may be required to operate simultaneously with the DNM or BTV Data Acquisition/Processing System.

c. See Chapter IV(1) of this Specification for estimation of

number/duration of tests involving these systems.

4. **Post-Test Data Processing**. Estimated number of work hours required for post-test processing as a function of real-time data acquisition hours by system:

| System | Post-Test Hours per Data Acquisition Hour |
|---|---|
| DNM | 10 |
| - - - - - - *deleted* - - - - - - | |
| PSMS | 1 |
| PMS | 1 |

5. **Environmental Measurement Systems**.
   a. Data gathering efforts involving the Conductivity, Temperature, Depth (CTD) sensor are estimated at seven operations per year, each requiring one operator for approximately two to six days.
   b. Support for the Acoustic Doppler Current Profiler (ADCP) shall be limited to procurement of parts/vendor support and corrective maintenance assistance on a case by case basis as requested by NUWC.
   c. Monitoring/maintenance of the weather station shall be performed daily.

6. An estimated one workyear of travel will be required to such locations as Dodge Pond, CT; Newport, RI; Seneca Lake, NY; Keyport, WA; and Lake Pend Oreille, ID. Travel is typically in support of various development projects as well as miscellaneous test support (i.e. post-processing at NUWCDIVNPT).

## E. KEY PERSONNEL/PERSONNEL QUALIFICATIONS

1. Key Personnel:

   a. Lead Acoustic Test Engineer

      1. Minimum Number Required: 1

2. Education: BS Degree in Electrical/Electronic Engineering or Physics (advanced degree work in Physics or Acoustic Engineering (MS desirable)), with at least five years direct experience and increasing responsibilities as described below.

3. Experience: Have direct experience and increasing responsibility in: the conduct of

real-time in-situ acoustics tests of submarines, surface ships, or torpedoes; the use of computer-controlled systems for acquiring and processing acoustic noise data; analysis of hydro-acoustic noise data in 1/3 Octave frequency bands; digital narrow band analysis including fundamental and harmonic frequency generation from operating machinery. Experience preparing technical documentation (e.g. technical memos, sketches, drawings, reports,etc.).

4. Other: Good oral and written communication skills are required.

2. Personnel Qualifications:

a. Acoustic Systems Engineer(s) To successfully execute the responsibilities and tasks implied, persons assigned should as a minimum:

1. Have a BS Degree in Electrical/Electronic Engineering or Physics.

2. Have five years experience in the operation of computer systems.

3. Have experience in writing computer applications programs.

4. Have experience in various aspects of real-time test operations; including radar and/or in-water tracking systems.

5. Be knowledgeable of the principles of underwater acoustics.

6. Have demonstrated experience in acoustic signature data analysis, including evaluation of hydrophone data in narrowband, 1/3 Octave, strip chart, and LOFAR data formats.

7. Have good oral and written communication skills.

## F. APPLICABLE DOCUMENTS

| | |
|---|---|
| OCD-(02.2)-05-XX; | Weather Station Data Dispersion |
| OCD-(02.2)-08-XX; | DNM Data Acquisition Rack Operating Procedures |
| OCD-(02.2)-13-XX; | Strip Chart Eight-Channel Recording System |
| OCD-(02.2)-43-XX; | Scientific Atlanta GDP 850 Operating Procedures |

- - - - - *deleted* - - - - -

| | |
|---|---|
| OCD-(02.2)-45-XX; | HP 9836/Scientific Atlanta GDP 850 Remote Control System |
| OCD-(02.2)-47-XX; | DNM Array Operating Procedures |
| OCD-(02.2)-48-XX; | Shipboard Electronics Operator |
| Other OCD's; | Relevant/Related OCDs as may be listed in Table XV-4 |
| APP 8-25G; | AUTEC Waterfront Procedures and Regulations |
| APP 11-5G; | Hurricane Plan, Andros Ranges |

Figure II-7
DNM System Block Diagram

*- - - - - - deleted - - - - - -*

Figure II-9
Portable Sonobuoy Measurement System

Figure II-10
Portable Measurement System

# ACOUSTIC TESTING EQUIPMENT

## DATA ACQUISITION AND PROCESSING SYSTEMS:

**SYSTEM: Deployable Noise Measurement**

| EQUIPMENT | MFR | MODEL | QTY |
|---|---|---|---|
| Time Code Translator | Datum | 9300 | 2 |
| Line Conditioner | Topaz | P1095-32 | 3 |
| OMNI Termination | NUWC | N/A | 1 |
| Line Array Termination | NUWC | N/A | 1 |
| Signal Patch Panel | Trompeter | N/A | 3 |
| Band Pass Filter Bank | NUWC | N/A | 1 |
| Summing Amplifiers | NUWC | N/A | 2 |
| Microphone | Realistic | N/A | 1 |
| Analog Tape Recorder | EMI | SA-7000 | 1 |
| Analog Tape Recorder | Honeywell | 101e | 1 |
| Digital Tape Recorder | RACAL | StorePlex | 1 |
| PING Detector Box | NUWC | N/A | 2 |
| Amplifier | Realistic | SA-150 | 1 |
| Audio Monitoring System | Onkyo | R1 | 1 |
| Function Generator | HP | 3325 | 1 |
| Amplifier/Filters | Precision | 216 | 1 |
| Scan Scopes | Data Check | 1810 | 2 |
| Personal Computer | CompuAdd | 486 | 1 |
| Dynamic Analyzer | HP | 3561-A | 1 |
| Dynamic Analyzer | HP | 3562-A | 1 |
| 8 Pen Plotter | HP | 7550 | 2 |

Table II-2

ACOUSTIC TESTING EQUIPMENT

Table II-2

ACOUSTIC TESTING EQUIPMENT

| | | | |
|---|---|---|---|
| Printer | Panasonic | KXP-P1124 | 1 |
| Dual Power Supply | Lambda | N/A | 1 |
| Dual Power Supply | HP | 6228B | 1 |
| Digital Cal Circuit | NUWC | N/A | 2 |
| Array Hardware | NUWC | N/A | N/A |

**SYSTEM:** ***- - - - - - deleted - - - - - -***

**SYSTEM: Portable Sonobuoy Measurement System**

| EQUIPMENT | MFR | MODEL | QTY |
|---|---|---|---|
| Sonobuoy Receiver | ICOM | R-7000 | 2 |
| Sonobuoy Receiver | Mil | ARR-75 | 2 |
| Pulse Code Modulator | Sony | 601 | 1 |
| Video Cassette Recorder | Mitsubishi | HS-U50 | 1 |
| Time Code Translator | Datum | 9100 | 1 |
| Signal Analyzer | HP | 3562A | 1 |
| 2 Pen Plotter | HP | 7470A | 1 |

Table II-2 (cont.)

ACOUSTIC TESTING EQUIPMENT

**SYSTEM: Portable Measurement System**

| EQUIPMENT | MFR | MODEL | QTY |
|---|---|---|---|
| Signal Cable (various) | Yale Cordage | N/A | 4 |
| Power Termination | AUTEC | N/A | 3 |
| Band Pass Filters | AUTEC | N/A | 2 |
| Digital Tape Recorder | Sony | TCD-3/TCD-7 | 4 |
| Recorder Battery Packs | AUTEC | N/A | 5 |
| Signal Analyzer | HP | 3560A | 1 |
| Disk Drive | HP | 9122 | 1 |
| Lap Top PC | Texas Inst. | 3000 | 1 |
| Portable Printer | Canon | BJ-10 | 1 |
| Anti-Strumming Cable | Yale Cordage | N/A | 2 |

**SYSTEM: Scientific Atlanta**

| EQUIPMENT | MFR | MODEL | QTY |
|---|---|---|---|
| 8 Channel Analyzer | SA | GPD 850 | 1 |
| Electrographic Recorder | EPC Labs | 2218S | 4 |

**SYSTEM: Strip Chart Recorders**

| EQUIPMENT | MFR | MODEL | QTY |
|---|---|---|---|
| 8 Channel Strip Charts | HP | 7418A | 2 |
| Filters | General Radio | 1925 | 2 |
| Patch Panel | NUWC | N/A | 1 |

Table II-2 (cont.)

Table II-2

ACOUSTIC TESTING EQUIPMENT

**SYSTEM: Analog Tape Recorder**

| EQUIPMENT | MFR | MODEL | QTY |
|---|---|---|---|
| 28 Track | Honeywell | 90 | 2 |

**SYSTEM: HP Computer System**

| EQUIPMENT | MFR | MODEL | QTY |
|---|---|---|---|
| Computer CRT/Terminal | HP | 9836 | 1 |
| Printer | HP | 2671G | 1 |
| Disk Drive | HP | 9153 | 1 |

**SYSTEM: Range User Audio Console**

| EQUIPMENT | MFR | MODEL | QTY |
|---|---|---|---|
| Audio Control Center | Sony | STR-AV480 | 1 |
| Cassette Tape Deck | Sansui | D-W10 | 1 |
| Graphic Equalizer | Pioneer | SG-90 | 1 |
| Speakers | AR | N/A | 2 |

**SYSTEM: Stand-alone Portable Computer Systems**

| EQUIPMENT | MFR | MODEL | QTY |
|---|---|---|---|
| PC | HP | Vectra | 1 |
| PC | CompuAdd | 486 | 4 |
| PC | Bi-Link | 386 | 1 |
| PC | Bi-Link | 486 | 1 |

Table II-2 (cont.)

Table II-2

ACOUSTIC TESTING EQUIPMENT

| | | | |
|---|---|---|---|
| PC | Proteus | 386 | 1 |
| PC | Compaq | 286 | 1 |
| PC | ZEOS | Pentium | 1 |

**SYSTEM: Miscellaneous Peripherals**

| EQUIPMENT | MFR | MODEL | QTY |
|---|---|---|---|
| Printer | HP | LaserJet4 | 1 |
| Printer | HP | LaserJetII | 1 |
| Printer | Panasonic | KP-1124 | 1 |
| Printer | Epson | LQ-1500 | 1 |
| Printer | Epson | FX-85 | 1 |
| Printer | HP | 550C | 1 |
| Printer | HP | 1200C | 1 |
| 6 Pen Plotter | HP | 7475A | 1 |
| 2 Pen Plotter | HP | 7470 | 1 |
| Disk Drive | HP | 9153 | 1 |
| Disk Drive | HP | 9122 | 1 |
| Signal Analyzer | HP | 3561A | 1 |
| Tape Degausser | CPU Link | 515 | 1 |

Table II-2 (cont.)

# ACOUSTIC TESTING EQUIPMENT

## ENVIRONMENTAL MEASUREMENT SYSTEMS

**SYSTEM: Weather Station**

| EQUIPMENT | MFR | MODEL | QTY |
|---|---|---|---|
| Anemometer | Coastal | WeatherPak 100 | 2 |
| Radio Receiver | Coastal | WeatherPak 100 | 4 |
| PC | CompuAdd | Tower 486 | 2 |

***- - - - - deleted - - - - -***

**SYSTEM: Acoustic Doppler Current Profiler**

| EQUIPMENT | MFR | MODEL | QTY |
|---|---|---|---|
| ADCP Unit | R&D Systems | CS-150 | 1 |
| Deployment Pole | AUTEC | N/A | 1 |
| Note Book PC | Sager | 486 | 1 |
| Interface Box | R&D Systems | N/A | 1 |

**SYSTEM: Conductivity, Temperature, Depth Sensor**

| EQUIPMENT | MFR | MODEL | QTY |
|---|---|---|---|
| CTD Instrument | Ocean Sensors, Inc. | OS200CTD | 1 |
| Winch | CB Hannay Reels | EC 1532 | 1 |

# II. RANGE DATA ACQUISITION SYSTEMS (CONT.)

## 3. AUTEC FORACS RANGE/SENSOR ACCURACY TESTING

### A. GENERAL

The primary mission of the Fleet Operational Readiness Accuracy Check Site (FORACS) Program is to conduct combat system-related Sensor Accuracy Tests (SATs). These tests measure the accuracy of target localization and on-board navigation sensors installed on surface ships, submarines, and helicopters of both U.S. and foreign Navies. Sensors tested include: sonars; search radars; heading sensors; periscopes and peloruses; gun/missile fire control radars and optical systems; and electronic support and countermeasure (ESM/ECM) units. AUTEC's FORACS Range is certified by COMNAVSEASYSCOM, and is an affiliate of the NATO FORACS Program. The range is designated NATO FORACS AUTEC (NFA).

The FORACS Range at AUTEC is a two dimensional tracking range, used mostly to test helicopter and surface ship ASW sensors. Sensor Accuracy Testing may also be conducted at a remote location, convenient to the Range User, using Mobile FORACS test procedures. The AUTEC ASW sensor data acquisition and analysis program is designed to acquire, process, and provide data deliverables in standard NATO as well as COMNAVSEASYSCOM (TM59093-AA-PRO-XXX/ASW STP (Series)) formats. This does not, however, preclude the use of the range facilities or technologies for other test applications or technical evaluations.

Submarine SATs are normally conducted on AUTEC's instrumented Weapons Range, where testing may be conducted at various keel depths. These operations permit the testing of sonars and Radio Directional Finding (RDF) units under operational conditions. RDF testing may also be accomplished in the open ocean with portable test equipment.

### B. DESCRIPTION

The FORACS Range is a 7 by 12 nautical mile area of the TOTO located directly off Site 1. Figure II-11 shows major system components, including: the tracking system; the sensor targets; on-shore control console; shipboard equipment; and the Site 1 data processing facility. Each component of the system is described in the following paragraphs. Table II-3 provides a representative list of FORACS Range equipment, including imbedded Automated Data Processing Equipment (ADPE). Actual inventory is as approved by NUWC. Additional test equipment is described in Chapter XII of this Specification. Associated FORACS real-time and post-test software, and general purpose ADPE are described in Chapters VI(1) and VI(2), respectively, of this Specification.

**Automatic Position Tracking System (APTS):** The APTS utilizes Differential Global Positioning System (DGPS) to continuously determine the test ship's position during on-range test measurements.

An engineering theodolite (e.g. deck transit), equipped with a digitizing unit and an RF link to the computer ashore, is installed and aligned to the construction counterline of the surface ship. At each data "mark", digitized deck transit data (relative bearing to an optical target of known location) are transmitted to the shore computer and merged with the positional tracking data. Thus, the position and attitude (e.g. actual heading) of the ship within the tracking range grid coordinate system may be "ideally" determined at each "mark". This permits the determination of ideal bearings and/or ranges to each target from the various sensors under test. A provision is available to bypass the digital deck transit reading and, by using a keypad, input a Ships Inertial Navigation System (SINS) reading to be used as the heading reference.

- - - - - - *deleted* - - - - - -

**Sensor Targets:** Three bottom-mounted sonar transducers are located on the FORACS Range at various depths. Each transducer has a variable tuning element to permit use over a wide range of frequencies. The transducers are called ashore to an Acoustic Test Set (ATS) located at Site 1, which receives and processes transmitted sonar signals and formats and transmits compatible return signals. The ATS is comprised of an IBM 486 compatible PC-controlled digital signal processor which can better handle modern, complex wave forms. This enables active sonar tests to be performed for a wide variety of U.S. and foreign sonar systems. A Continuous Wave (CW) or noise signal can also be transmitted whenever a passive sonar target is desired. An alternate Sonar Target System (STS), also located at Site 1, can be used if required.

Standard tri-corner reflectors mounted on pilings inside the reef provide two surveyed radar targets. One is located between North and Mid Towers and the other between Mid and South Towers. Both are

located far enough from shore to minimize background clutter. North and South Towers also serve as radar targets.

Real and simulated radar emitter targets are provided to test the directional accuracy and analysis capability of installed ECM/ESM systems. Test capability is provided by multiple sources. The ESM Test Set, located in the FORACS console, is capable of providing low power (approximately 20 watts) CW or pulsed signals and simulated non-doppler active radar (transponder) targets between 4 and 12 GHZ. High power emitters include a Raytheon Pathfinder radar (9.375 GHZ), EPSCO Power Pulsers (1.1-1.5 & 5.5, 9.4 GHZ) controlled from the FORACS console, and AIRS tracking (3.1-3.5 GHZ) radars located at Site 2. AUTEC also has a van-mounted transportable RDF Test Set (RDFTS) capability for CW transmission between 2 and 400 MHZ.

There are offshore towers which may be used as optical targets, as may the water tower located at Site 1, and the BATELCO tower located at Fresh Creek. These optical targets are used for such sensors as peloruses and also by the engineering theodolite (deck transit) operator.

**Control Console:** The Control Console, located in the CCB at Site 1, is the primary control unit for the FORACS Range and houses the majority of the FORACS-related electronics. Electronics equipment includes communication equipment, the Automatic Position Tracking System, DGPS, the STS, ATS, and the ESMTS. The Control Console can also access the FORACS IBM compatible PC which receives data from the APTS DGPS, computes ideal sensor ranges and/or bearings, and displays real-time position of the test vessel.

**Integrated Data Acquisition Test System (IDATS):** IDATS processes shipboard sensor data and displays associated error data in the form of plots and listings in realtime. IDATS also provides own-ship navigation information such as ship's track, heading, speed, etc., as well as bearing and range to most range targets upon request. These data are useful to the shipboard test engineers to ensure sufficient sensor bearing/range coverage and data density for analysis purposes, to identify sensor anomalies, undetected equipment malfunctions, operator intervention, and interference, and to aid in target acquisition. This allows for equipment corrective action during the test.

**FORACS Data Processing:** FORACS data processing is initially accomplished at the CCB and finalized at West Palm Beach. An IBM-compatible PC is the primary data processing instrument for most of the ASW Sensor Accuracy Tests

conducted at the FORACS Range. The Weapons Range Computer is used for all ASW Sensor Accuracy Tests performed on the Weapons Range. Some trials may utilize both computers. For example, track data may be processed on the Weapons Range computer and then transferred to the PC for merging with shipboard data and final data processing. Software programs are available that allow one computer to be used as a backup for the other.

**Shipboard Equipment:** Proper instrumentation of the test vessel is required to obtain the necessary data inputs for the computer ashore. About 1,100 pounds of equipment, including DGPS, IDATS, an engineering theodolite, and communications equipment is transported to and from the test vessel.

**Shipboard Testing:** A complete Sensor Accuracy Test on either the FORACS Range or the Weapons Range is done in three phases: a dockside phase; an on-range phase; and a post-test analysis/reporting phase. For RDF-only tests, performed on the Weapons Range, the dockside phase is not performed.

The dockside phase is accomplished when the ship is in port, moored alongside a pier. It consists of a thorough briefing of the ship's officers and key crew members, as well as a check of the shipboard equipments to be tested. Equipment readout locations are established, nomenclature and serial numbers of sensors are recorded, the ship's centerline reference is determined, and parallax data is obtained using the ship's Booklet of General Plans. IDATS cable runs are established. A GPS antenna location is surveyed. Radar range tests are performed and a settled error test is conducted on the ship's heading sensors to assess alignment. Additional dockside test requirements may include active sonar ranging tests, periscope calibrations, and GPS static testing (as applicable).

The on-range phase begins when the Contractor's test team boards the ship from a small boat on the day of the test. For surface ships, the engineering theodolite and DGPS antenna are set up on the after deck or helo deck, and proper operation verified.

The Contractor's Roving Engineer(s) provide an appropriate portable radio to each sensor location and

brief the operator(s) of the equipment involved in the test. They also verify that the equipment is set-up in the proper configuration and that the correct targets are being tracked. An IDATS computer is placed at predetermined sensor operator locations.

The Contractor's Shipboard Test Conductor proceeds to the ship's bridge and coordinates the test and run geometries with the ship's navigator, and Officer of the Deck, or (for submarines) the Conning Officer. The Test Conductor is the primary interface between the ship and the test team and is responsible for the overall conduct of the test.

When all stations are ready, a voice synthesizer under control of the FORACS range console operator commences calling "marks" over the FORACS communications network to all operators and the control station ashore. At each "mark", target range and/or bearing data are recorded at each sensor under test. Simultaneously, a mark number tag is assigned to the ship position determined by the Automatic Position Tracking System, and the engineering theodolite (deck transit) bearing to a target of known location is recorded. By establishing the ship's position and attitude within the range grid, the "ideal" range and bearing to any target can be calculated. The on-range phase is complete once a statistically valid set of data is obtained for each sensor.

Submarine ASW Sensor Accuracy Tests, conducted on the Weapons Range, differ from FORACS Range tests in that data is recorded onboard the submarine using the ship's fire control system data recording module, or a carry-aboard recorder. Data is tagged, by time, to position data obtained from the in-water tracking system. Such methods provide greater data-density than can be obtained using a verbal "mark" calling scheme, and tests can be accomplished in less time. Data is processed similarly to that obtained on the FORACS Range.

On-range test requirements may include laser range finder testing, multiple-mode sonar testing, and dynamic submarine geometry runs.

Submarine RDF/ESM tests may be performed in the open ocean (local Navy OPAREAS). The RF targets are temporarily installed aboard a surface craft or vessel supplied by Type Commander or designee. Ideal bearings to target are derived from periscope readings. Data are recorded in a manner similar to that of tests conducted on AUTEC's Weapons Range.

**Mobile FORACS Testing:** Mobile FORACS procedures allow a Sensor Accuracy Test to be conducted at a Range User-convenient location. Shipboard testing requirements are identical to those of fixed-range tests. Portable targets (e.g. radar transponders, sonar transponders) and tracking equipment are supplied and operated by AUTEC personnel from a support vessel provided by the Ranger User.

**Analysis and Reporting:** On-range testing is followed by a data analysis/reporting phase. Sensor data are compared to the computer-

calculated ideal range and/or bearing to a specific target from a shipboard point representing the sensor's parallax-corrected location. Differences between ideal ranges and bearings and those recorded from the sensors under test are provided in listings and plots as necessary to portray the system performance.

A preliminary (quick look) message report is generated from this data and the results are provided to the Range User, normally within 24 hours. Its purpose is to provide immediate feedback regarding any major deficiencies identified.

The final results of the test are published in a bound, formal report within ten days of the test. This report consists of a narrative discussion, data plots (graphical presentations), plus a statistical analysis and written discussion of each sensor's error structure. Prior to distribution the final report will be reviewed by NUWC.

## C. CONTRACTOR RESPONSIBILITIES

1. The Contractor shall maintain all of AUTEC's Sensor Accuracy Test (SAT)/FORACS Range systems and equipment in an operational status except during scheduled range maintenance periods authorized by NUWC. The Contractor shall ensure that routine preventative maintenance is conducted on a not-to-interfere basis with scheduled operational requirements. All SAT/FORACS Range equipment will be manned and operated in accordance with the AUTEC Schedule of Operations, published Operations Directives, Workload Factors given in paragraph D, Applicable Documents cited in paragraph F, and other requirements stated below. Special requirements may be tasked by NUWC Work Order or Letter of Direction.

2. The general approach to accomplishing AUTEC's SAT/FORACS Range needs is that routine day-to-day tasks shall be performed by the Contractor. Arrangements for manufacturer or other procured services to support occasional, extraordinary, or specialty requirements related to this work area shall be made by the Contractor on a case-by-case basis considering cost effectiveness, schedule, or other requirements as approved by NUWC.

3. The Contractor shall maintain, check-out, calibrate, and

operate all of AUTEC's FORACS Range and related SAT equipment in accordance with the standards and practices established by applicable OCDs and other documents listed in paragraph F, and/or as delineated in maintenance and operation manuals provided by equipment manufacturers. Manning requirements, specified in Supplement 3 to NAVSEA ODs 40087 and 43690, may be adjusted commensurate with Workload Factors delineated in paragraph D.

4. The Contractor shall abide by the AMS for all existing SAT/FORACS Range equipment. Preventative maintenance of new equipment will be based on manufacturer-recommended procedures and/or new AMS procedures to be developed by the Contractor.

5. The general approach to corrective maintenance of AUTEC's SAT/FORACS Range systems shall be to restore all equipment to operational status as quickly as possible by replacement of modules and sub-assemblies. The modules/sub-assemblies may then be repaired by either the Contractor or the manufacturer or others, whichever NUWC deems to be most cost effective.

6. The Contractor shall provide an adequate staff of persons qualified to perform the following tasks:

a. Develop and maintain an inventory of Government-provided consumables, expendables, and repair/spare parts for all FORACS Range and SAT equipment in accordance with the policies provided in Chapter XXI (1) of this Specification.

b. Provide technical support to Purchasing for procurement of SAT/FORACS Range equipment including: specification writing; technical evaluation of proposals; cost review; quality review; technical qualification of sources; preparation of inspection and acceptance procedures; and conduct of acceptance tests.

c. Diagnose system failures; restore system operation, and repair items as appropriate. These personnel shall be generally capable of supporting engineering changes, preparing documentation, performing equipment modifications, and installing and testing new equipment.

d. Study operational problems and recommend solutions including preparing or revising operating, installation, or maintenance documents. Periodically review documentation for accuracy. Update preventative/corrective maintenance documentation/practices when needed. Prepare training material and equipment installation checklists.

e. Investigate reliability, maintainability and/or performance problems with existing equipment and provide recommendations and other necessary support to SE&A (see Chapter XVI of this Specification) as required to assist in the correction of such deficiencies.

f. In accordance with procedures addressed in relevant OCDs, support AUTEC's Configuration Management and Configuration/Drawing Control Systems requirements as relate to SAT/FORACS Range systems/equipment. Provide/maintain complete and accurate engineering drawings, equipment technical (operating, maintenance, etc.) manuals, parts lists, and other requisite documentation. Prepare/submit relevant Modification Proposals (Mod Props), Equipment Addition/Deletion Notices, Requests for Document Change, Document Change Notices, engineering cost estimates, etc..

g. Arrange for manufacturer or other procured support of SAT/FORACS Range equipment on a case-by-case basis considering cost effectiveness and mission critical requirements as approved by NUWC.

7. The Contractor shall develop/maintain/deliver all required drawings, equipment manuals, studies, failure investigations/analysis, and other documents discussed above, and others as may be requested by NUWC, in a timely manner. Delivered documents shall be complete and accurate.

8. The Contractor shall collect data, maintain records, and prepare/submit a monthly FORACS Activity Status Report by the 10th working day of each succeeding month. This report shall include:

a. Status of tests completed.

b. Status of tests scheduled.

c. Training completed.

9. The Contractor shall provide a FORACS Range Engineer whose duties are described in paragraph E. This full-time engineer shall be responsible for meeting scheduled test requirements, and shall be qualified to perform and/or oversee the following tasks for their respective systems/equipments:

a. Fault isolation.

b. Corrective actions.

c. System alignment/calibration.

d. New equipment installation and Operational Acceptance Testing.

e. Equipment modifications including pre-requisite modification proposals.

f. The conduct special studies, and preparation of technical reports regarding equipment performance and improvement.

g. Preparation and review of technical documentation.

h. Providing technical assistance to the Systems Engineering and Analysis group.

i. Providing NUWC Work Order support.

j. Providing technical interface with NUWC/other activities.

10. The Contractor shall provide a training program to ensure that all personnel involved in performing Sensor Accuracy Test are qualified to perform their assigned tasks. Personnel assigned as FORACS Field Engineers shall be certified in accordance with the requirement of OCD-(02.3)-13-XX. All assigned Sensor Accuracy Test personnel shall read and be responsible for understanding the information listed in OCD-(02.3)-10-XX. The Contractor shall

maintain a record of all such training, qualifications, or certifications received by each individual. Personnel who have not been so qualified/certified shall not be permitted to conduct operations without supervision.

11. The Contractor shall conduct dockside and underway (on-range or open ocean) tests, and perform post-test data processing as required. The Contractor shall be responsible for the preparation and distribution, subject to NUWC approval, of both Sensor Accuracy Test quick look messages and final reports. Reports shall be prepared so as to be usable by highly trained technical personnel to correct ship system errors and still be understandable by ship's company who are trained only in the operation of the equipment. The Contractor shall be responsible for the delivery of data products, of professional quality, to designated recipients in a timely manner (or as scheduled by applicable OD).

12. The Contractor shall assure that all FORACS Range systems/equipments are properly grounded and protected from lightning strike damage in accordance with procedures and requirements specified in MIL-HDBK-419A.

13. The Contractor shall be responsible for following appropriate security guidelines for classification, identification, marking, and safeguarding of classified SAT/FORACS Range resources, etc. as dictated by the subject matter. Specific guidelines relating to information that may be shared/disclosed in conjunction with AUTEC's NATO FORACS affiliation are provided in Director, Navy International Programs Office Letter SS10, Serial 33/44000916, dated 25 May 1994. The Contractor shall maintain accurate records for data accountability purposes. Specific requirements, including administrative, operational, physical, and personnel controls are set forth in Chapter XXIII of this Specification, the current DoD Contract Security Classification Specification (DD Form 254) as appearing in Section J, Attachment (8), of this Contract, and in appropriate Applicable Documents cited in paragraph F.

14. The Contractor shall submit all NUWC-required technical and administrative reports, described in Chapter XXV of this Specification, as pertain to support for AUTEC's SAT/FORACS Range functions.

## D. WORKLOAD FACTORS

1. Concurrent dockside, on-range, or open ocean tests will not be scheduled.

2. Typical Test Types:

a. **United States Navy (USN) Surface Ships SATs as part of Weapons System Accuracy Trial (WSAT):** Surface ship WSATs require: two 8 hour days of dockside tests; one 16 hour day of on-range tests; data reduction/analysis; a quick look report; and a final report.

b. **USN Surface Ship SATs (Stand-alone):** Stand-alone Sensor Accuracy Tests for surface ships require: two 8 hour days of dockside tests; one 16 hour day of on-range tests; data reduction/analysis; a quick look report; and a final report.

c. **USN Submarine SATs, as part of a WSAT:** Submarine WSATs require: one to three 8 hour days of dockside tests; one 12-16 hour day of on-range tests; data reduction/analysis; a quick look report; and a final report.

d. **On-Range USN Submarine RDF/ESM (Only) Tests:** Submarine RDF/ESM tests require: one 12 to 16 hour day of on-range tests; data reduction/analysis; a quick look report (with bearing plots); and a final report (also with plots).

e. **Opean Ocean USN RDF/ESM (Only) Tests:** Opean ocean RDF/ESM tests normally encompass 3 to 5 days at sea. Open ocean tests require: dockside equipment checkout; data reduction/analysis; a quicklook report; and a final report.

f. **Foreign Navy Surface Ship SATs:** Foreign surface ship SATs require: two 8 hour days of dockside tests; two 12 hour days of on-range tests; data reduction/analysis; a quick look report; and final report.

g. **Foreign Navy Submarine SATs:** Foreign submarine SATs require: one to three 8 hour days of dockside tests; two to five 12 hour days

of on-range tests; data reduction/analysis; a quick look report; and a final report.

h. **Foreign Navy Helicopter SATs:** Normally, 1 to 2 helicopters will be tested sequentially during one 12 hour day on-range. Foreign helicopter SATs require: on-range tests; data reduction/analysis; a quick look report; and a final report.

i. **Other Tests:** The FORACS DGPS tracking system will be used to provide in-air track an average of eight 12 hour days on-range each year for non-ASW sensor-related testing.

3. Personnel estimates vs. test phases are as follows:

| Ship Type | Dockside Pers/Days | Underway Shipboard Pers/Days | Ashore Pers* |
|---|---|---|---|
| SURF (FORACS Range) | 6/2 | 6/1-2 | 2 |
| SUB (Weapons Range) | 6/1-3 | 3**/1-5 | Varies |
| SUB (Open Ocean) | None | 2/3-5 | None |

* Does not include personnel needed for tracking system operation.
** Two (2) for RDF/ESM (only) tests.

4. See Chapter IV(1) of this Specification for estimates of the number of Sensor Accuracy/FORACS tests to be conducted annually.

5. Quick look reports for all standalone Sensor Accuracy Tests (less RDF/ESM only tests) shall be message-type reports generated within 24 hours of completion of on-range testing. A quick look message report, for Sensor Accuracy Tests performed as part of a WSAT, shall be issued within 96 hours of test completion and shall contain final test data analysis results.

6. Preliminary error plots may be required (if so specified by applicable Test Plan/OD) for Range User review prior to scheduled COMEX of the succeeding day's test events. Special transportation arrangements to deliver such preliminary data may be required.

7. Quick look reports for RDF/ESM (only) type tests shall also be message-type reports but will also include initial bearing plot data. Initial bearing plots may be required to be forwarded upon Range User request. Reports will be generated for each trial within 24 hours of completion of on-range testing.

8. Unless otherwise allowed by NUWC due to test workload, final reports for all non-RDF/ESM type tests will be completed and available for review by NUWC within seven calendar days of completion of on-range testing, and subsequently distributed within ten days of completion of on-range testing.

9. For RDF/ESM-only tests, the Contractor shall provide a final report (including plots) within five days of completion of testing.

10. The Contractor shall prepare, distribute, and mail an average of three data packages per month.

11. Travel: Yearly travel is estimated to be 20 trips each year to Port Everglades or Cape Canaveral, FL and 5 trips to other locations such as: Norfolk, VA; or Mayport, FL. There will be foreign travel to a European city consisting of: NATO FORACS Engineers meeting, one trip per year; NATO FORACS software meeting, one trip per year; FORACS related test support to NATO FORACS Norway (NFN) and/or NATO FORACS Greece (NFG), 2 trips per year. Additionally, it is estimated that Mobile FORACS testing will be conducted at remote locations approximately 5 times per year.

## E. KEY PERSONNEL/PERSONNEL QUALIFICATIONS

1. Key Personnel:

a. FORACS Range Engineer (Test Conductor)

1. Minimum Number Required: 1

2. Education: BS Degree in Engineering, Physics, Mathematics, or similar field, with five years direct experience and increasing responsibilities as described below.

3. Have direct experience and increasing responsibilities in range operations, including testing and analysis of surface ship and submarine sensor systems' accuracy (sonar, fire control gyros, etc.).

Must have experience preparing technical documentation (e.g. technical memos, sketches, drawings, reports, etc.). Must have an excellent working knowledge of U.S. Navy surface ship, submarine, and helicopter navigation and target sensor systems. Have a minimum of one year experience in supervision of personnel participating in range testing. Experience in supervision must have included scheduling and coordination of team efforts when resources are separated and are performing separate functions. Must have demonstrated capability and experience in interfacing with naval officers and enlisted personnel in the coordination of dockside and at-sea tests. Must be familiar with naval shipboard operations, terminology, customs, traditions, and protocol for the effective accomplishment of this function.

4. Other: Good oral and written communication skills are required.

2. Personnel Qualifications:

a. FORACS Field (e.g. Roving/Sonar) Engineer(s) To successfully execute the responsibilities and tasks described, the persons assigned should as a minimum:

1. Have a BS Degree in Engineering, Physics, Mathematics, or similar field.

2. Have three years experience in test conduct, statistical data analysis, and reporting thereof.

3. Have a background in Naval shipboard test operations.

4. Good working knowledge of U.S. Navy sonars, radars, RDFs, and other sensor systems and communications equipment, and experience in the observation and analysis of real-time range test operations.

## F. APPLICABLE DOCUMENTS

| | |
|---|---|
| DoD Handbook (HDBK)- 419A; | Grounding, Bonding, and Shielding for Electronic Equipment and Facilities |
| NAVSEA OD 40087, Supplement 3; | ASW Weapon System Accuracy Trials Program for Surface Ships, Sensor Accuracy Test Program |
| NAVSEA OD 43690, Supplement 3; | ASW Weapon System Accuracy Trials Program for Submarines, Sensor Accuracy Test Program |
| NCCOSC FORACS Operations and Maintenance Manual, RDFTS for FORACS | |
| NFO/D(77)1; | NATO FORACS Standing Instructions |
| Director, Navy International Programs Office ltr 5510, Ser 33/44000916, dtd 25 May 1994 | |
| IDATS Range Operator's Manual | (Latest Version) |
| Allied FORACS Publication (AFP)-1, Volume 1 | NATO FORACS Range User's Guide |
| OCD-(02.3)-05-XX; | FORACS Acoustic Target System Console Operation |
| OCD-(02.3)-06-XX; | FORACS Electronic Support Measures Test System Console Operation |
| OCD-(02.3)-08-XX; | FORACS Data Processing Guide |
| OCD-(02.3)-10-XX; | FORACS Required Reading List |
| OCD-(02.3)-11-XX; | Dockside Doppler/Range Accuracy Test Set Operation |
| OCD-(02.3)-12-XX; | FORACS Data Retention and Control |
| OCD-(02.3)-13-XX; | FORACS Engineer Certification Program |
| OCD-(02.3)-15-XX; | Deck Transit Setup and Operation |
| OCD-(02.3)-16-XX; | AN/BRD-7 Ship's Data Recorder Operation |

*- - - - - deleted - - - - -*

- - - - - *deleted* - - - - -

| | |
|---|---|
| OCD-(02.3)-46-XX; | FORACS Electronic Support Measures (ESM) Radar Target Operation |
| Other OCDs; | Relevant/Related OCDs as may be listed in Table XV-4 |
| APP 8-25G; | AUTEC Waterfront Procedures and Regulations |
| APP 11-5G; | Hurricane Plan, Andros Ranges |

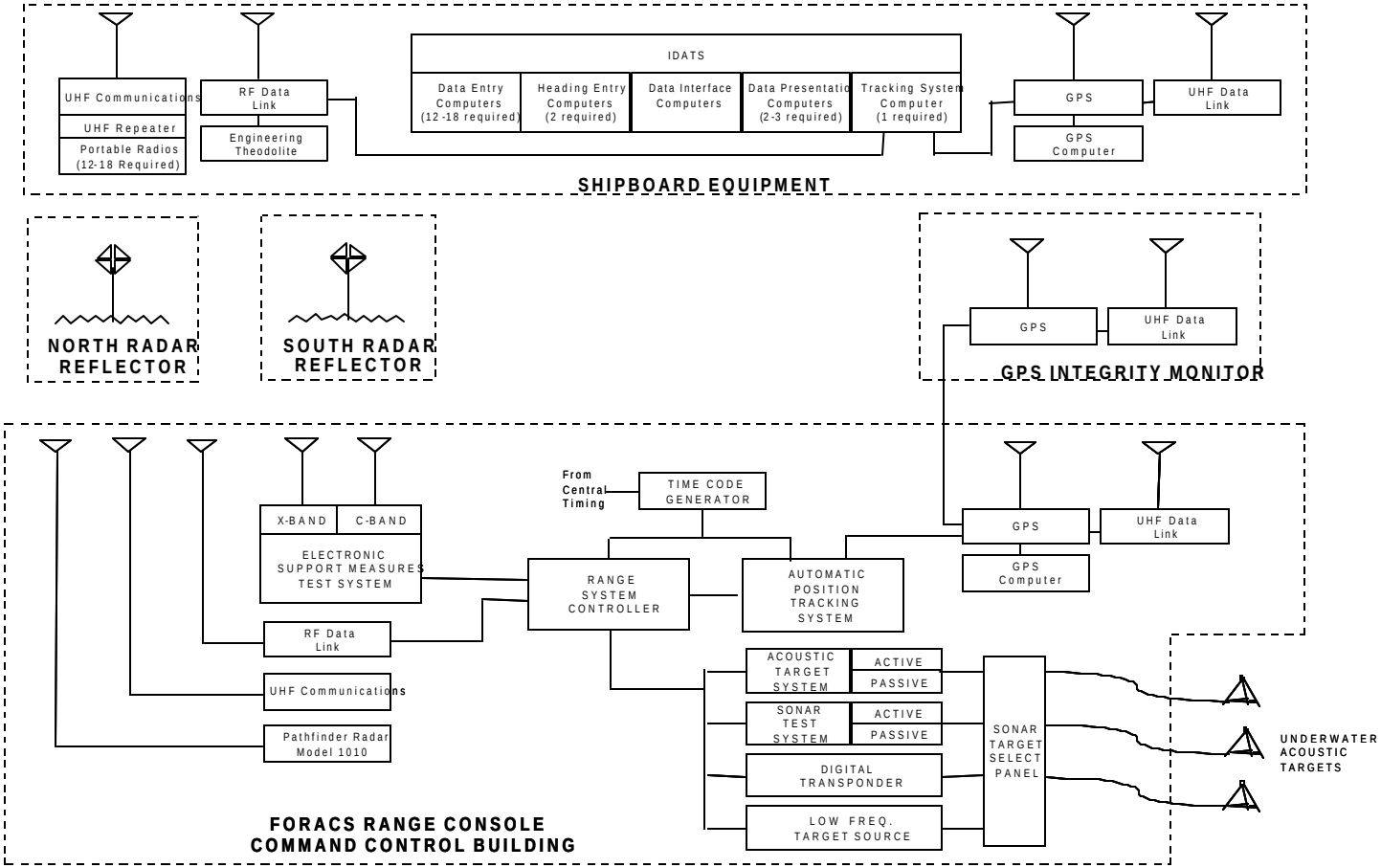


Figure II-11
AUTEC FORACS Range System

# AUTEC FORACS RANGE EQUIPMENT

| Equipment | Mfr | Model No. | Qty |
|---|---|---|---|
| SITE 1 CONTROL CONSOLE | | | |
| Frequency Select Unit | APL/UW | N/A | 2 |
| Digital Transponder | APL/UW | N/A | 1 |
| Signal Analyzer | HP | HP-3516A | 2 |
| LF Frequency Target Gen | APL/UW | N/A | 1 |
| Power Conditioner | Waber | - | 1 |
| Power Amplifier | Instruments Inc. | L2,L6 | 2 |
| Waveform Synthesizer | Wavetek | 178 | 1 |
| Monitor 14" | HP | HP-35721A | 2 |
| Dual Drive | Bering | 8320 | 1 |
| Computer | HP | HP-9920A | 2 |
| Programmable Noise Generator | NCCOSC | N/A | 3 |
| | - - - - - *deleted* - - - - - | | |
| Noise Generator | HP | HP-8057A | 1 |
| Switch/Control Unit | HP | HP-3488A | 1 |
| Audio Monitor | APL/UW | N/A | 1 |
| Current Monitor Unit | NCCOSC | N/A | 1 |
| Oscilloscope | Tektronix | SC502 | 2 |
| Oscilloscope | Tektronix | 2445A | 1 |
| Range System Controller | COMPAQ | 386 | 1 |
| Thinkjet Printer | HP | HP-2225A | 1 |
| Directional Coupler (4-8GHZ ) | NCCOSC | N/A | 1 |
| TWT Amplifier (4-8GHZ) | VARIAN | N/A | 1 |
| Directional Coupler (8-12GHZ) | NCCOSC | N/A | 1 |
| TWT Amplifier (8-12GHZ) | Hughes | N/A | 1 |
| Pulse Function Generator | HP | HP-8116A | 1 |
| Time Synthesizer | HP | HP-5359A | 1 |
| Signal Generator | HP | HP-8673B | 1 |
| Spectrum Analyzer | HP | HP-8566B | 1 |
| IF/RF/Trigger AMP Unit | NCCOSC | N/A | 1 |
| | - - - - - *deleted* - - - - - | | |
| | - - - - - *deleted* - - - - - | | |
| | - - - - - *deleted* - - - - - | | |

Table II-3

AUTEC FORACS RANGE EQUIPMENT

| Equipment | Mfr | Model No. | Qty |
|---|---|---|---|
| | - - - - - *deleted* - - - - - | | |
| | - - - - - *deleted* - - - - - | | |
| | - - - - - *deleted* - - - - - | | |
| | - - - - - *deleted* - - - - - | | |
| | - - - - - *deleted* - - - - - | | |
| Radar Marine Pathfinder | Raytheon | 1010 | 1 |
| Transmit/Receive Relay Unit | NCCOSC | N/A | 1 |
| Audio Amplifier | Crown | PL2 | 1 |
| Switched Control Panel | Wavetek | 603 | 2 |
| Brickwall Filter | Wavetek | 716 | 1 |
| Multiprogrammer | HP | 6942A | 1 |
| Multiprogrammer | HP | 6943A | 1 |
| Oscillator | Tektronix | SG505 | 1 |
| Storage Oscilliscope | Nicolet | 440 | 2 |
| Attenuator | Kay | 5436 | 1 |
| Voice Synthesizer | DECTALK | - | 1 |
| Receiver | ICOM | R7000 | 1 |
| Transceivers | ICOM | IC229H | 2 |
| Modem | Kantronics | KPC-3 | 4 |
| Attenuator/Switch Driver | HP | 11713A | 1 |
| Switcher Control | Wavetek | 601 | 1 |
| RF Relay Unit | NCCOSC | N/A | 1 |
| | - - - - - *deleted* - - - - - | | |
| Laser Printer | HP | Laserjet | 2 |
| Power Pulser | EPSCO | PK5KB | 3 |
| Radio Base Station | Motorola | 7106A | 2 |
| Computer | Compaq | 486DX2-66 | 1 |
| Printer | EPSON | LQ-860 | 1 |
| | - - - - - *deleted* - - - - - | | |
| | - - - - - *deleted* - - - - - | | |
| Time Code Generator | DATUM | 9100 | 2 |
| Micro Head | EPSCO | Various | 5 |

Table II-3 (cont.)

## AUTEC FORACS RANGE EQUIPMENT

| Equipment | Mfr | Model No. | Qty |
|---|---|---|---|
| Counter | Tektronix | 503 | 1 |
| Disk Drive | HP | 9122 | 1 |
| Switching System | Wavetek | 600 | 1 |
| Amplifier | MacIntosh | 2300 | 1 |
| GPS Base Station | Ashtech | Z-12-RS | 1 |
| Transceivers | PacCrest | RF96W-40-02 | 2 |
| Multimover Controller | NUWC-Keyport | - | 1 |
| Printer | EPSON | LQ-5704 | 1 |
| Audio Mixer | Rane | SM-26 | 2 |
| DAT Recorder | Teac | RD-135T | 1 |
| Filter | Precision Filters | MF64-00-1 | 1 |
| Counter | HP | 5316B | 1 |
| Multimeter | HP | 34401A | 1 |
| Acoustic Target Computer | NCCOSC | - | 1 |
| T/R Relay Panel | NCCOSC | - | 1 |
| Amplifier | Instruments Inc. | L6A | 1 |
| Modem for GPS | UDS | - | 1 |

## SITE 1 DGPS INTEGRITY MONITOR

| | | | |
|---|---|---|---|
| Integrity Monitor | NUWC-Keyport | - | 1 |
| Modem | UDS | - | 1 |

Table II-3 (cont.)

## AUTEC FORACS RANGE EQUIPMENT

| Equipment | Mfr | Model No. | Qty |
|---|---|---|---|
| **RDFTS EQUIPMENT** | | | |
| Agile Signal Generator | HP | 8645A | 2 |
| Attenuator/Switch Driver | HP | 11713A | 1 |
| Attenuator | HP | 8495G | 1 |
| RF Controller/Monitor | NCCOSC | N/A | 1 |
| HF Power Amplifier | ENI | A150 | 1 |
| VHF Power Amplifier | ENI | 550L | 1 |
| B-Band Power Amplifier | MPD | LAB1-105-50 | 1 |
| C-Band Power Amplifier | MPD | LAB1-510-50 | 1 |
| D-Band Power Amplifier | MPD | LAB1-1020-35 | 1 |
| Power Supplies | MPD | HEPS-24-40 | 2 |
| Thruline Directional Wattmeter | Bird | 43 | 1 |
| RF Power Meter | Bird | 4421 | 1 |
| Directional Power Sensor | Bird | 4021 | 1 |
| Directional Power Sensor | Bird | 4022 | 1 |
| AC Controllers | NCCOSC | N/A | 2 |
| Power Sensor Switch Unit | NCCOSC | N/A | 1 |
| **PORTABLE EQUIPMENT (WEST PALM BEACH, ANDROS AND DOCKSIDE)** | | | |
| Theodolite | Dietzgen | 6020 AIE | 4 |
| Theodolite | Wild | T1 | 7 |
| Theodolite | Wild | T1000 | 2 |
| Power Pulser | EPSCO | PK5KB | 1 |

Table II-3 (cont.)

AUTEC FORACS RANGE EQUIPMENT

| Equipment | Mfr | Model No. | Qty |
|---|---|---|---|
| FM Transceivers | Motorola | MX-330, 340 and 350 | 19 |
| Synchro Monitor | ILC | MSR-236 | 3 |
| Doppler Test Set | APL/UW | N/A | 2 |
| | - - - - - *deleted* - - - - - | | |
| | - - - - - *deleted* - - - - - | | |
| FM Transceiver - VHF | Motorola | Saber | 10 |
| FM Transceiver - UHF | Motorola | Saber | 14 |
| FM Transceiver - UHF | Motorola | PX300S | 5 |
| FM Repeater | Motorola | 3180BT | 2 |
| Receiver | ICOM | IC-R100 | 2 |
| Modem | Kantronix | KPG-3 | 2 |
| | - - - - - *deleted* - - - - - | | |
| Printer | Kodak | 180 SI | 1 |
| Portable Computer | AST | 63 | 16 |
| Portable Computer | AST | 900N | 2 |
| | - - - - - *deleted* - - - - - | | |
| | - - - - - *deleted* - - - - - | | |
| Network Hub | LANCAST | 4391 | 2 |
| Network Hub | LANCAST | 4392 | 1 |
| Network Hub | Boca Research | BEN 210 | 2 |
| Docking Station | AST | 500982 | 2 |
| Docking Station | On Site | OI-ETI-4 | 3 |
| Radar Repeater | Marconi | - | 1 |
| Active Sonar Processor | A/S Scanmatic | SM2020-B | 1 |
| Portable Computer | AST | 910N | 1 |
| Portable Computer | IBM | 760XL | 2 |
| Portable Computer | IBM | 760E | 1 |
| Portable Computer | IBM | 760C | 1 |
| Portable Computer | IBM | 755C | 2 |
| Portable Computer | IBM | 380 | 1 |
| Portable Computer | Toshiba | 740CDT | 2 |
| Network Hub | NerGear | EN308 | 1 |
| Portable Computer | TI | 4000SX | 2 |
| Portable Computer | TI | 560CD | 2 |
| Multimover GPS | NUWC-Keyport | - | 2 |

Table II-3 (cont.)

AUTEC FORACS RANGE EQUIPMENT

| Equipment | Mfr | Model No. | Qty | |
|---|---|---|---|---|
| GPS Receivers | Ashtech | SCA-12 | 3 | |
| Transceivers | PacCrest | RF96W-40-35 | 2 | |
| Transceivers | PacCrest | RF96W-40-02 | 2 | |
| Portable Computer | NEC | PC 410 | | 1 |
| Desktop Computer | Micron | P 200 MT | 1 | |
| Printer | HP | Laserjet4 | 1 | |
| Printer | HP | 1600CM | 1 | |
| Battery Chargers | Motorola | NLN8988 | 3 | |
| Battery Chargers | Motorola | NTN4796A | 3 | |
| Battery Charger | Motorola | RLN1001A | 1 | |
| Portable Computers | Compaq | 2650 | 2 | |
| Theodolite Interfaces | NCCOSC | - | 2 | |
| Active Sonar Processor | A/S Scanmatic | SM2057 | 1 | |
| Portable Computers | IBM | 390 | 15 | |

Table II-3 (cont.)

# III. SPECIAL TEST SYSTEMS

## 1. RESERVED FOR FUTURE USE

### A. GENERAL

### B. DESCRIPTION

### C. CONTRACTOR RESPONSIBILITIES

### D. WORKLOAD FACTORS

### E. KEY PERSONNEL/PERSONNEL QUALIFICATIONS

### F. APPLICABLE DOCUMENTS

**THIS PAGE INTENTIONALLY LEFT BLANK**

**THIS PAGE INTENTIONALLY LEFT BLANK**

JA1-97
N61339-97-C-0001
P00076

**THIS PAGE INTENTIONALLY LEFT BLANK**

**THIS PAGE INTENTIONALLY LEFT BLANK**

JA1-99
N61339-97-C-0001
P00076

**THIS PAGE INTENTIONALLY LEFT BLANK**

JA1-100
N61339-97-C-0001
P00076

**THIS PAGE INTENTIONALLY LEFT BLANK**

# III. SPECIAL TEST SYSTEMS (CONT.)

## 2. AUTEC MINEFIELD(S)

### A. GENERAL

The AUTEC minefield(s) are developed and deployed, on an as-required basis, to provide mine avoidance/detection training for Fleet sonar operators, and to support Test and Evaluation (T&E) of mine detection/classification systems. When deployed, both exact geographical and relative locations of the exercise (e.g. inert dummy) mine shapes may be classified. The mine shapes themselves are not classified, and are procured from Navy and commercial sources.

### B. DESCRIPTION

AUTEC's minefields are developed and deployed to meet identified Range User needs. Size, shape, components, and location of such minefields will vary accordingly. Mine shapes represent actual tactical weapons, and may either rest directly on the seabed or be tethered to a mooring. Tethered mines consist of a buoyant mine shape, a mooring device and a pendant designed to restrain the mine shape at a predetermined depth. Some mine shapes may be equipped with acoustic transponder release devices (for recovery purposes) and/or battery-powered locating beacons. Normally, expendable, autonomous underwater acoustic navigation beacons are installed, at surveyed locations, near the perimeter of each minefield. These beacons can be interrogated by active sonar signals, and provide a means for Range User platforms to determine their location for navigation purposes. See example provided in Figure III-2.

### C. CONTRACTOR RESPONSIBILITIES

1. The Contractor shall provide support to assemble, deploy, recover, and refurbish dummy mines. The Contractor shall periodically acoustically interrogate any installed transponders, check the condition of the mooring hardware, report discrepancies to the Government, change batteries, and refurbish/replace defective/missing units as identified. The Contractor shall also assemble and deploy navigation beacons, as required by NUWC, and shall periodically acoustically interrogate such beacons to verify proper operation and location.

2. In accordance with procedures addressed in relevant OCDs, support AUTEC's Configuration Management and Configuration/Drawing Control Systems requirements as relate to

AUTEC's minefield(s) and associated equipment. Provide/maintain complete and accurate engineering drawings;

equipment technical (operating, maintenance, etc.) manuals; parts lists; and other requisite documentation. Prepare/submit relevant Modification Proposals (Mod Props), Equipment Addition/Deletion Notices, Requests for Document Change, Document Change Notices, engineering cost estimates, etc. These, and other documents as may be requested by NUWC, shall be provided in a timely manner. Delivered documents shall be complete and accurate.

3. The Contractor shall develop and maintain an inventory of Government-provided consumables, expendables, and repair/spare parts for all minefield equipment in accordance with the policies provided in Chapter XXI(1) of this Specification.

4. The Contractor shall submit all NUWC-required technical and administrative reports, described in Chapter XXV of this Specification, as pertain to AUTEC's minefield(s).

## D. WORKLOAD FACTORS

1. The Contractor shall acoustically interrogate deployed minefield transponders and navigation beacons approximately twice per year, on a not to interfere basis with other operations/commitments, unless otherwise directed by NUWC. Discrepancies shall be reported to the Government, and corrective action accomplished as necessary. AUTEC's current minefield, located in the Berry Islands, in the Bahamas, consists of equipment listed in Table III-1. The acoustic transponder system equipment is included in Table XII-3 of this Specification.

2. The Contractor shall change all transponder batteries and refurbish moorings every 24 to 30 months.

## E. KEY PERSONNEL/PERSONNEL QUALIFICATIONS

None.

## F. APPLICABLE DOCUMENTS

| | |
|---|---|
| Other OCDs; | Relevant/Related OCDs as may be listed in Table XV-4 |

Figure III-2
AUTEC Minefield

EQUIPMENT LIST FOR AUTEC'S BERRY ISLANDS MINEFIELD

| Equipment | Mfr | Model No. | Quantity |
|---|---|---|---|
| NAVIGATIONAL TRANSPONDER | BENTHOS | XT-6000 | 9 |
| TETHERED MINE SHAPE | NAVY | MK 6 (EXERCISE) | 9 |
| TETHERED MINE SHAPE | NAVY | MK 60 (EXERCISE) | 2 |
| BOTTOM MINE SHAPE | NAVY | MK 55 (EXERCISE) | 2 |
| BOTTOM MINE SHAPE | NAVY | MK 82 (EXERCISE) | 2 |
| BOTTOM MINE SHAPE | NAVY | MK 83 (EXERCISE) | 2 |

Table III-1

# III. SPECIAL TEST SYSTEMS (CONT.)

## 3. PORTABLE TRACKING SYSTEM

### A. GENERAL

The Portable Tracking System (PTS) provides a mobile underwater/in-air instrumented range capability in ocean depths from 100 to 2000 feet, accommodating test areas of up to 100 square nautical miles (nmi). The PTS is capable of tracking in real-time: torpedoes; mobile targets; submarines; Unmanned Underwater Vehicles (UUVs); Submarine Launched Mobile Mines (SLMMs); surface ships; and Antisubmarine Warfare (ASW) fixed and rotary wing aircraft when equipped with proper range tracking hardware. The system provides support for reliable testing and evaluation through real-time and post-test processed positional data.

The PTS was designed to support tracking operations in littoral environments at sites anywhere in the world. The system's in-water arrays are modular and therefore can be deployed in several operations areas simultaneously. Currently, the PTS real-time processing system can only support operations at one site at a time. The PTS can be operated from a moored vessel at sea or from a land-based site. These features allow the PTS to be deployed and operated at sites physically remote from the Andros Ranges. AUTEC has no shallow water areas, within the Tongue of the Ocean, suitable for PTS operations. Therefore, all PTS operations are considered to be remote to AUTEC's Site 1 and the CCB. The nearest shallow water site suitable for PTS operations are the waters adjacent to the Berry Islands.

### B. DESCRIPTION

The PTS consists of in-water and shipboard/shore-based equipment. The in-water equipment consists of the two 50 nautical mile modular arrays and the Buoyed Acoustic RF Telemetry System (BARTS). The shipboard/shore-based equipment consists of in-water deployment/recovery system equipment and two electronics enclosures referred to as the "Portable Range Operations Center" (PROC) and the "Minivan". The two enclosures are designed to allow for the support of both shipboard and land-based operations. The PROC and Minivan were designed to be easily transportable and can therefore be used to support tracking operations at multiple PTS in-water installation sites through proper scheduling. Contained in the PROC are the subsystems used to conduct tracking operations including in-water tracking, in-air tracking, data processing, and communications. In-water/in-air tracking, all real-time display, and the range

track data collection are supported by the Automated Data Processing Subsystem (ADPS) which uses the Navy Tracking and Display System (NTADS) software. PTS NTADS software and hardware are listed separately in Tables VI-1 and VI-6 respectively. Significant instrumentation/equipment, itemized by subsystem, are described in Table III-2. Specialized acoustic tracking equipments for use with PTS are listed in Table XII-1. Figure III-3 provides an overview of the PTS.

**1. In-Water Tracking Systems.** The in-water equipment consists of two types of acoustic sensor systems: two 50 nautical mile long hydrophone arrays; and a 36 independently-moored hydrophone system called the Buoyed Acoustic RF Telemetry System (BARTS).

In-line Hydrophone Arrays:

The primary in-water subsystem consists of two 50 nautical mile long Electrical Mechanical Optical Cables (EMOC) with in-line acoustic sensors called hydrophone nodes, distributed at one nautical mile intervals. These in-line sensor arrays provide time-division-multiplexed communication of acoustic data on a fiber-optic cable to the shore/shipboard systems. The arrays are modular and therefore can be deployed in several operations areas simultaneously. The PTS hydrophones are designed to operate over a useful frequency range of 8 - 45 kHz. Six PTS hydrophones called "Low Frequency Nodes", are designed with an operating frequency range of 100 Hz - 45 kHz. Because of their complexity, the in-line arrays are generally deployed for extended periods of at least three to six months. Figure III-4 depicts the configuration of the in-line array as it is being deployed.

Buoyed Acoustic RF Telemetry System (BARTS):

The second type of PTS in-water acoustic sensor is the Buoyed Acoustic RF Telemetry System. This alternative system consists of up to 36 independent buoys that are anchored to the bottom via an electro-mechanical cable. Raw acoustic data is collected from a hydrophone near the bottom, transmitted to the surface buoy via the electro-mechanical cable and finally transmitted back to the shipboard systems via VHF transmitter. The surface floats are equipped with an electronics package that includes a VHF transmitter, rechargeable battery pack, an integral

flashing navigation light, and radar reflector. The BARTS is a very portable in-water system that is deployed for short term operations, generally from one day to a maximum of a few weeks. Figure III-5 shows the BARTS.

Acoustic Pingers:

The PTS uses tracking pingers which are described in Chapter II (1) of this Specification.

**2. Shipboard/Shore-Based Systems.** The shipboard/shore-based equipment consists of the In-water Deployment/Recovery System and two electronics enclosures referred to as the “PROC” and the "Minivan". The two enclosures are designed to allow for the support of both shipboard and land-based operations. Figure III-6 shows a shipboard layout of the Deployment/Recovery System along with the PROC and Minivan.

Portable Range Operations Center (PROC):

All in-water/in-air tracking, real-time display, range track data collection, test conduct, and range safety functions are controlled from the PROC. Contained in the PROC are the tracking/display computers of the ADPS, the communications subsystems, and a fifty channel digital signal processing subsystem consisting of a Versa Module Eurocard (VME) based signal processor and the Signal Distribution System (SDS). The PROC is designed for deployments either at sea or to remote land-based sites, and can support in-line array operations in conjunction with the Minivan, or BARTS operations independently (without the Minivan).

Automated Data Processing Subsystem (ADPS):

ADPS provides the computing resources necessary to perform the range functions of cable deployment, range hydrophone survey, vehicle tracking, real-time data acquisition, range safety monitoring, exercise control, cable recovery, and post-exercise analysis. ADPS is implemented as a collection of networked workstations and peripherals to support the required pre-test, real-time, and post-test operating functions. The ADPS uses the Navy Tracking and Display System (NTADS) software

(see Table VI-1). Figure III-7 provides an overview of the ADPS.

Communications System:

The PTS is configured to support in-air communications with radio equipment for 6 channels: 1 for High Frequency (HF), 2 for VHF, and 3 for UHF.

Digital Signal Processors (DSPs):

The Digital Signal Processor (DSP) detects and time-tags the arrival of the acoustic signals emitted by a range vehicle's tracking pinger. The DSP is based on a set of commercial off-the-shelf (COTS) VME boards. The board set includes a SPARC 5CE controller, hard disk, IRIG-synchronizer/generator, VME Clock and Timing (VCAT) interface board, and up to 17 Octal TMS320C40 DSP boards. One processor module, which can serve 68 hydrophones, consists of the board set housed in a 19-inch VME chassis. The full 100-node PTS requires two processor modules. Physically, one set of 50 processors resides in the PROC and the other set of 50 resides in the Minivan. The processor is capable of detecting multiple ping formats, allowing for the expansion to future algorithms.

Minivan:

Contained within the Minivan is a set of fifty VME-based processors/SDS, the PTS Large Area Tracking Range (PTS/LATR) subsystem, the array cable optical termination and power system, and ancillary telemetry equipment. The Minivan is intended for use in conjunction with the PROC. In-air tracking data and processed acoustic data are transmitted to the PROC via cabling. The PROC can be used without the Minivan to support BARTS deployments. To use the cabled arrays, the Minivan must be used in conjunction with the PROC because it houses the array termination equipment.

In-Air Tracking System (PTS/LATR):

In-air tracking is performed by the PTS/LATR, a DGPS- based tracking system that provides TSPI data for aircraft and surface platforms if they are equipped with a LATR Participant Instrumentation Package (PIP). Computed in-air positional data, in latitude/longitude format, is presented to the ADPS GPS interface for reformatting, smoothing, and display. The PTS/LATR system is similar in operation to, and shares several components with the AUTEC Andros LATR system described in Chapter II-(1) of this Specification but is not identical. The PTS/LATR is a self-contained DGPS tracking system consisting of 3 full-size Tactical Advanced Computer Four (TAC-4)(72" H x 24" W x 32" D each) racks (elevation drawing is shown as Figure III-8). PTS/LATR system surface tracking coverage area will vary depending upon the height and position of the VHF antennas but is expected to cover, at a minimum, the instrumented underwater tracking portion of PTS. System in-air coverage is also dependent upon aircraft height, but can be as much as 125 nmi. PTS/LATR hardware includes: one HP Tactical Advanced Computer Four (TAC-4) computer, two HP-742rt VME form computers, various power supplies, two AN/URY-3 transceivers, one GPS time code generator, one LEICA MX9112R DGPS receiver, one X-terminal maintenance console, three rack-mounted UPS units, and five antennas (two omni-directional and three GPS).

Deployment/Recovery System:

The PTS deployment/recovery equipment is a physically large suite of equipment specifically designed for the PTS. Figure III-6 is a drawing of how the equipment is laid out on-board a deployment ship. The equipment includes: cable pans; a powered sheave; cable guide troughs/chutes; a Linear Cable Engine (LCE); and diesel generators. The LCE and diesel generators are described here as part of the PTS for completeness, they will neither be stored, maintained, nor operated by the Contractor. These items will be maintained, and operated separately by the Government and will be stored at the Ocean Construction Equipment Facility (OCEF), St. Juliens Creek, Portsmouth Virginia.

3. **Storage and Transport.** PTS is designed to minimize both the time and expense associated with installation, removal, shipping, and storage. The complete system is housed in ISO rated containers for shipping and storage. The cable is stored in two pans, each containing 50 nautical miles of cable. These pans meet ISO 1d requirements as specified in ISO 668, "Series 1 Freight Containers Classifications, Dimensions, and Ratings".

C. **CONTRACTOR RESPONSIBILITIES**

1. The Contractor shall maintain all of AUTEC's PTS instrumentation systems and equipment in an operational status except during scheduled range maintenance periods authorized by NUWC. The Contractor shall ensure that routine preventative maintenance is conducted on a not-to-interfere basis with scheduled operational requirements. All PTS equipment will be manned and operated in accordance with the AUTEC Schedule of Operations, published Operations Directives, Workload Factors given in paragraph D, Applicable Documents cited in paragraph F, and other requirements stated below. Special requirements may be tasked by NUWC Work Order or Letter of Direction.

a. The Contractor shall assist the Government with the in-water installation and recovery of the PTS In-line Arrays. Because of the complexity and the infrequent occurrences of the In-line Array installations/recoveries, the Government will retain overall responsibility and require only assistance from the Contractor.

b. The Contractor shall maintain all PTS equipment listed in Table III-2 in accordance with paragraph 1 above, except for the Portable Hydraulic Unit, Linear Cable Engine (LCE), LCE Control Booth, LCE Control Booth A/C unit, and the Diesel Generators (200 KW). These items will be maintained and operated separately by the Government, and stored at the Ocean Construction Equipment Facility (OCEF), St. Juliens Creek, Portsmouth, Virginia.

c. The operational readiness of deployed in-line array installations shall be verified at a minimum of once every three months. This operational check shall include, but not be limited to,

system powering, an abbreviated acoustic survey, and tracking performance tests to verify system operation and performance.

d. The Contractor shall be responsible for the deployment and recovery of the BARTS.

e. PIP-related responsibilities are presented in Chapter XII of this Specification.

2. The general approach to accomplishing AUTEC's PTS needs is that routine day-to-day tasks shall be performed by the Contractor. Arrangements for manufacturer or other procured services to support occasional, extraordinary, or specialty requirements related to this work area shall be made by the Contractor on a case-by-case basis considering cost effectiveness, schedule, or other requirements as approved by NUWC.

3. The Contractor shall maintain, check-out, calibrate, and operate all of AUTEC's PTS instrumentation systems and equipment in accordance with the standards and practices established by applicable OCDs, locally prepared/approved Operating Maintenance Instructions (OMIs), and/or as delineated in maintenance and operation manuals provided by equipment manufacturers.

4. The Contractor shall develop, and abide by, preventative maintenance procedures for all relevant PTS equipment. Preventative maintenance of new equipment will be based on manufacturer-recommended procedures and/or new AMS procedures to be developed by the Contractor.

5. The general approach to corrective maintenance of AUTEC's PTS components and subsystems shall be to restore all equipment to operational status as quickly as possible by replacement of modules and sub-assemblies. The modules/sub-assemblies may then be repaired by either the Contractor or the manufacturer or others, whichever NUWC deems to be most cost effective.

6. The Contractor shall provide an adequate staff of persons qualified to perform the following tasks:

a. Develop and maintain an inventory of Government-provided consumables, expendables, and repair/spare parts for all

PTS instrumentation systems and equipment in accordance with the policies provided in Chapter XXI (1) of this Specification.

b. Provide technical support to Purchasing for procurement of PTS instrumentation system equipment including specification writing; technical evaluation of proposals; cost review; quality review; technical qualification of sources; preparation of inspection and acceptance procedures; and conduct of acceptance tests.

c. Diagnose system failures; restore system operation, and repair items as appropriate. These personnel shall be generally capable of supporting engineering changes, preparing documentation, performing equipment modifications, and installing and testing new equipment.

d. Study operational problems and recommend solutions including preparing or revising operating, installation, or maintenance documents. Periodically review documentation for accuracy. Update preventative/corrective maintenance documentation/practices when needed. Prepare training material and equipment installation checklists.

e. Investigate reliability, maintainability and/or performance problems with existing equipment and provide recommendations and other necessary support to SE&A (see Chapter XVI of this Specification) as required to assist in the correction of such deficiencies.

f. In accordance with procedures addressed in relevant OCDs, support AUTEC's Configuration Management and Configuration/Drawing Control Systems requirements as relate to PTS instrumentation systems/equipment. Provide/maintain complete and accurate engineering drawings, equipment technical (operating, maintenance, etc.) manuals, parts lists, and other requisite documentation. Prepare/submit relevant Modification Proposals (Mod Props), Equipment Addition/Deletion Notices, Requests for Document Change, Document Change Notices, engineering cost estimates, etc.

g. Arrange for manufacturer or other procured support of PTS

instrumentation systems/equipment on a case-by-case basis considering cost effectiveness and mission critical requirements as approved by NUWC.

7. The Contractor shall develop/maintain/deliver all required drawings, equipment manuals, studies, failure investigations/analysis, and other documents discussed above, and others as may be requested by NUWC, in a timely manner. Delivered documents shall be complete and accurate.

8. The Contractor shall designate a Systems Engineer who shall have responsibility for the PTS. This individual shall be the single point of contact responsible for PTS system operation and maintenance. Responsibilities include, but are not limited to, operation and maintenance of hardware systems such as the In-Water Subsystem electronics, PTS/LATR, communications equipment, and acoustic tracking equipment (pingers). This individual shall also be responsible for meeting scheduled operational and test requirements, and shall be qualified to perform and/or oversee the following tasks for the respective systems/equipments.

1. Fault isolation.

2. Corrective actions.

3. System alignment/calibration.

4. New equipment installation and Operational Acceptance Testing.

5. Equipment modifications including pre-requisite modification proposals.

6. The conduct of special studies, and preparation of technical reports regarding equipment performance and improvement.

7. Preparation and review of technical documentation.

8. Providing technical assistance to the Systems Engineering and Analysis group.

9. Providing NUWC Work Order support.

10. Providing technical interface with NUWC/other activities.

11. Providing technical expertise to design PTS deployment/range layout configuration.

12. Performing analysis of tracking performance in real-time, and post-test, based upon knowledge of underwater acoustics and the PTS, to resolve tracking or other system performance issues.

13. Providing system (hardware/software) administration and configuration management.

9. The Contractor shall provide a training and qualification program for personnel assigned to operate and maintain the PTS instrumentation/equipment. The Contractor shall additionally ensure that personnel assigned or tasked to perform maintenance, modifications, or repairs to equipment, which involves soldering, are certified in accordance with the provisions of OCD-(15.3)-00-XX. The Contractor shall maintain a record of all such training, qualifications, or certifications received by each individual. Personnel who have not been so qualified/certified shall not be permitted to conduct operations without supervision.

10. The Contractor shall assure that all PTS instrumentation systems/equipments are properly grounded and protected from lightning strike damage in accordance with procedures and requirements specified in MIL-HDBK-419A.

11. The Contractor shall be responsible for following appropriate security guidelines for classification, identification marking, and safeguarding of classified PTS resources, etc. as dictated by the subject matter. The Contractor shall maintain accurate records for data accountability purposes. Specific requirements, including administrative, operational, physical, and personnel controls are set forth in Chapter XXIII of this Specification, and the current DoD Contract Security Classification Specification (DD Form 254) as appearing in Section J, Attachment (8), of this Contract.

12. The Contractor shall submit all NUWC-required technical and

administrative reports, described in Chapter XXV of this Specification, as pertain to support for AUTEC's PTS instrumentation systems.

## D. WORKLOAD FACTORS

1. The below listed tasks shall be supported for each test or test sequence requiring the PTS. Because operations will be remote from AUTEC's Main Base (Site 1) on Andos Island, assigned personnel must be thoroughly trained, and self-sufficient, as relate to PTS operations and real-time fault diagnosis, isolation, and repair. This is especially true when operations are being conducted in the shipboard configurations.

a. PTS Systems Engineer: Duties and responsibilities are as described above. Only one individual is required to be present on-site and to be available as necessary.

b. Test Conductor: Duties, responsibilities, and qualifications are as described in Chapter IV(1) of this Specification.

c. Data Manager: Performs operation, as well as any requisite fault diagnosis, isolation, and repair/debugging of the ADPS and NTADS hardware/software during all pre-test, real-time, and post-test operations. Responsible for all data collection and management. Assists the PTS System Engineer in the analysis of tracking and other performance parameters in real-time and post-test as may be required to resolve performance related issues.

d. Electronics Technician: Supports system check-out, alignments, and calibrations. Performs/assists in any requisite system/component fault diagnosis, isolation, and repair during pre-test, real-time, and post-test operations.

2. The PTS data acquisition workload is defined in terms of data acquisition hours (DAHs). Data acquisition hours encompass those periods of time, commencing when AUTEC is manned and ready, during which track data is acquired in support of a PTS test using any combination of PTS instrumentation. Data acquisition hours include the time from manned and ready (nominally one hour prior to COMEX) until equipment is secured subsequent to a test, but do not include the time required for pre-test checkout/calibration.

a. Estimated Test Workload: One test period consisting of 12 hours of real-time data acquisition per month (PTS operations will not be scheduled so as to conflict with Andros Ranges peak operating periods, RTDC dual operations, or Acoustic Trials).

b. The following support tasks are applicable to both pre-installed In-line Hydrophone Arrays and the BARTS. Those tasks specific to the BARTS are so identified.

1. Pre-Test System Setup and Checkout: Prior to shipboard loading and transiting to the operations site, the PTS is required to be setup and verified for operational readiness. This effort requires the PTS Operations personnel. Equipment must then be physically secured to ensure no damage during shipboard loading (mobilization).

Time to complete: 2-3 days, 8 hours/day.

2. Mobilization: The staging and shipboard loading of the PROC, the Minivan, and any other ancillary equipment onto an operations vessel. Operations personnel are required to ensure proper loading of equipment. Cranes, welders, ship's electrician, ship's crew are required to load and secure the PTS equipment on the operations vessel.

Time to complete: 1 day, 12 hours/day at staging area.

3. Mooring and System Retrieval: At sites where the in-water arrays have already been installed, the operations vessel will have to anchor or moor to a pre-existing anchorage for operations. Once that is accomplished the end of the array cable would be retrieved by divers or via acoustic release and connected to the shipboard systems.

Time to complete: 1-3 hours at operations site.

4. Deployment (BARTS only): It is anticipated that BARTS will be required two times per year. If the BARTS is being used the system will require deployment at the operations site.

Time to complete: 1 day, 12 - 16 hours at operations site.

5. Survey and Pre-Test Tracking Performance Verification: These tests are required to be performed for any type of installation. Pre-existing installations have to be re-surveyed and tested to verify system performance. New installations require surveying and testing to establish performance.

Time to complete: 1-2 days, 12 hours/day at operations site.

6. PTS/LATR System: When the PTS/LATR System is required, system initialization and subsequent shutdown procedures must be accomplished. Although a dedicated operator is not required, periodically system-operability must be monitored during operations.

Time to complete: 30 minutes each for initialization and shutdown.

7. Quick-Look Data Processing: Tracking data replay and processing may be required to be performed at sea between tracking exercises and upon their immediate conclusion.

Time to complete: As required.

8. Demobilization: Upon return from operations, all PTS equipment must be removed from the support vessel, and PTS equipment secured. Cranes, welders, and other personnel, similar to those used for mobilization, will be required.

Time to complete: 1 day, 12 hours/day at staging area.

9. Post-Test Processing: Formal processing of tracking data. Formal post-test processing will be accomplished either on Andros Island or at the West Palm Beach Headquarters.

Time to complete: As required.

## E. KEY PERSONNEL/PERSONNEL QUALIFICATIONS

1. Key Personnel: None.

2. Personnel Qualifications:

a. PTS Systems Engineer: To successfully execute the responsibilities and tasks implied, the person assigned should as a minimum:

1. Have a BS degree in Electrical Engineering or directly related technical field, with five years direct experience:

2. Have a minimum of 5 years direct experience and increasing responsibility in the design, modification, and/or maintenance of passive hydro-acoustic systems including: hydrophones/transducers, data transmission, and analog and digital signal processing.

3. Be thoroughly familiar with all aspects of underwater sound propagation.

4. Must have a minimum of 2 years of experience working with RF communications, undersea cabling, connectors, etc.

5. Have demonstrated experience with, and excellent knowledge of, troubleshooting/fault isolation methodology.

6. Have a minimum of 1 year experience with Unix operating systems.

7. Good oral and written communications skills are required.

b. Data Manager(s): To successfully execute the responsibilities and tasks implied, persons assigned should as a minimum:

1. Have a BS degree in Computer Science

2. Have at least two years of direct experience in the operation of UNIX Operating Systems, C programming, X Windows and Motif software.

3. Have at least two years experience in computer system administration.

4. Have at least two years experience in computer hardware and networks.

5. Have a basic understanding of the principles of underwater sound propagation.

6. Have a basic understanding of principles of acoustic underwater tracking.

## F. APPLICABLE DOCUMENTS

MIL-HDBK-419A; Grounding, Bonding, and Shielding for Electronic Equipment and Facilities

NUWCDIVNPT PTS Reference Documentation;

PTS Program Management Plan

PTS Concept of Operations Document

PTS System Specification

PTS Deliverable Documentation Listing

PTS ADPS Software User's Manual

PTS Shore/Shipboard and In-Water Subsystem Operation and Maintenance Training Manual

PTS Engineering Drawings

ODC-(15.3)-00-XX; Soldering Certification Program

Other OCD's; Relevant/Related OCD's as may be listed in Table XV-4

- - - - - *deleted* - - - - -

| | |
|---|---|
| ISO 668; | Series 1 Freight Containers Classifications, Dimensions and Ratings |

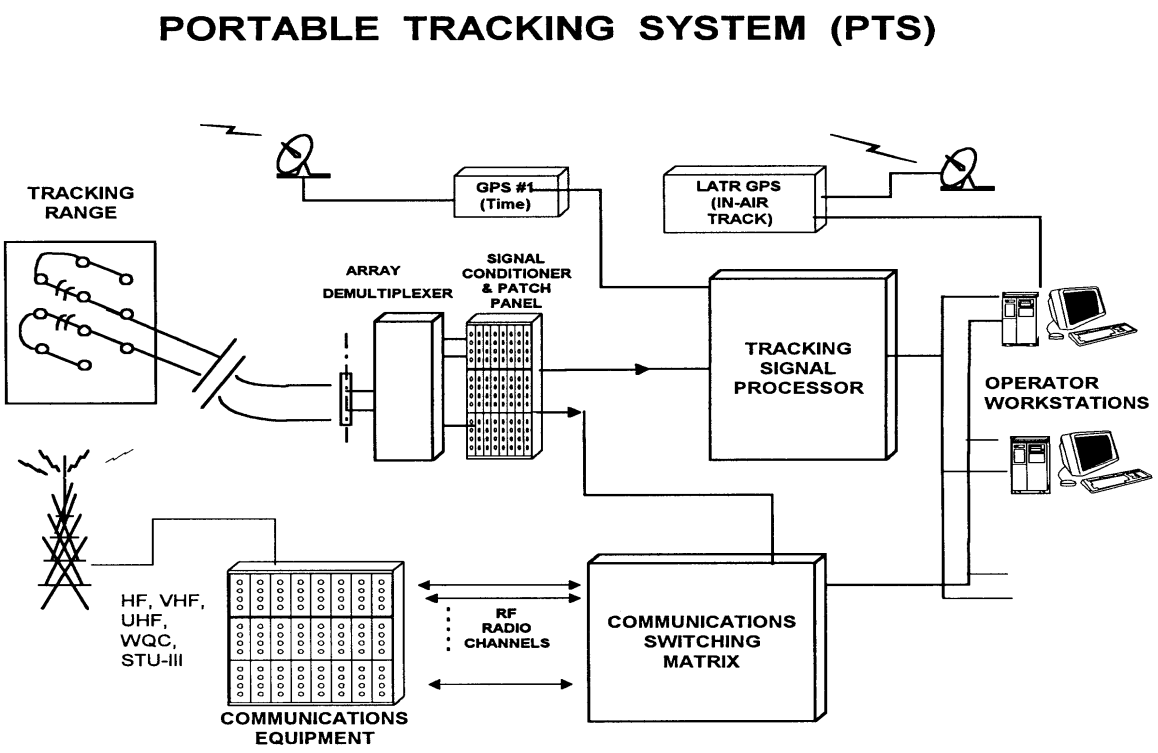


Figure III - 3
PTS Overview

Figure III - 3
PTS Overview

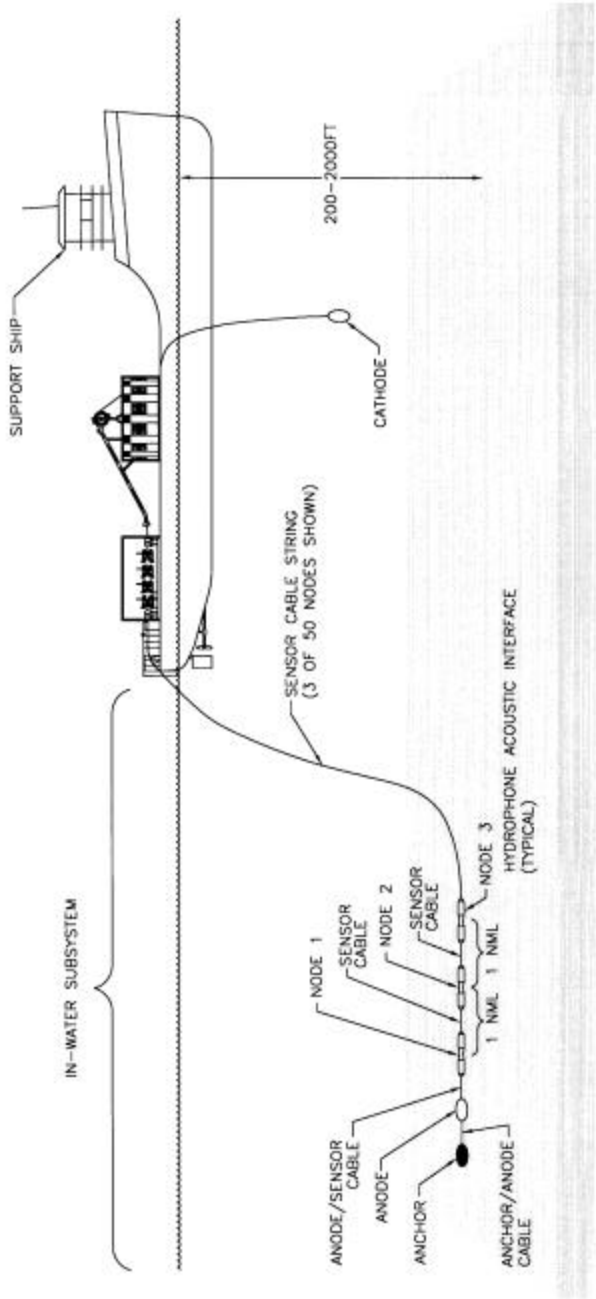


Figure III - 4
In-Water Subsystem
In-Line Array

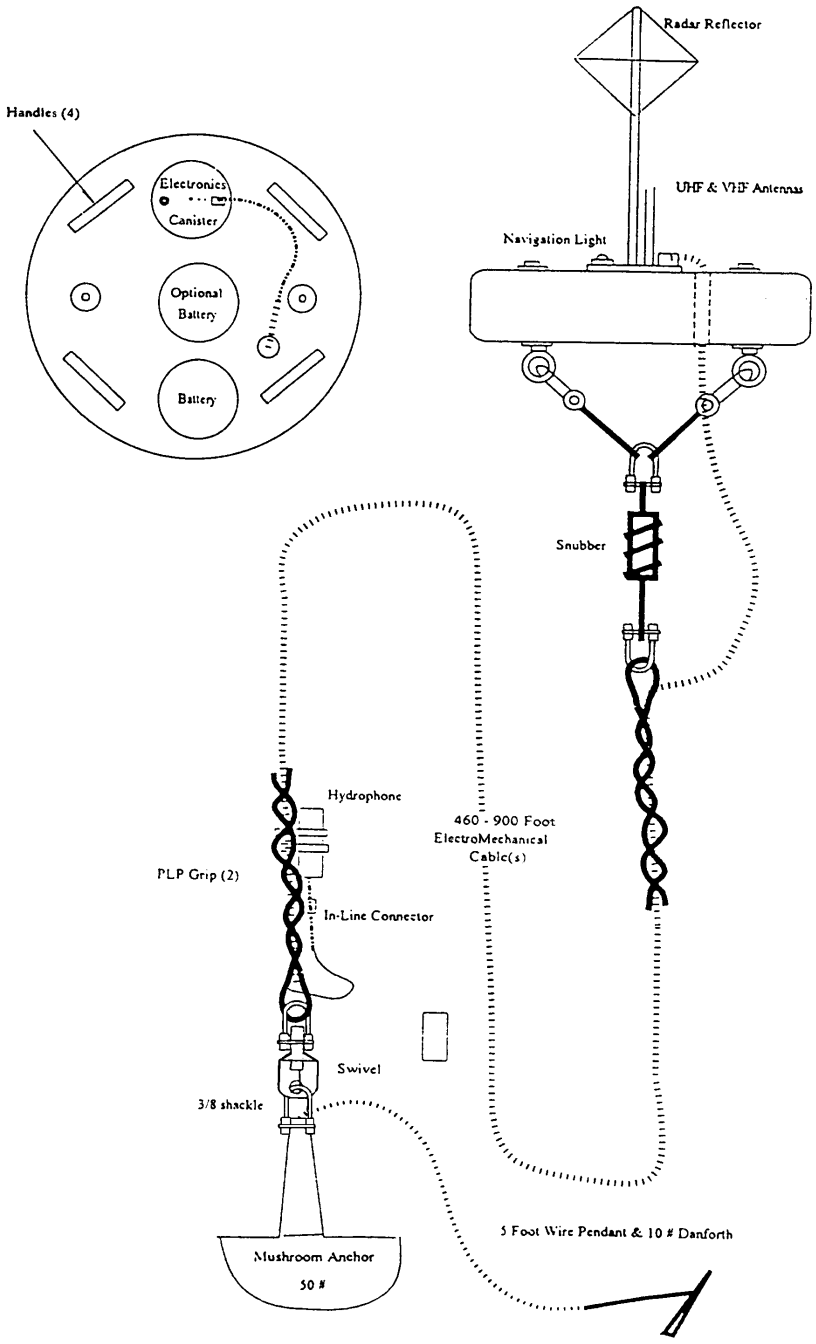


Figure III - 5
Buoyed Acoustic RF Telemetry System (BARTS)

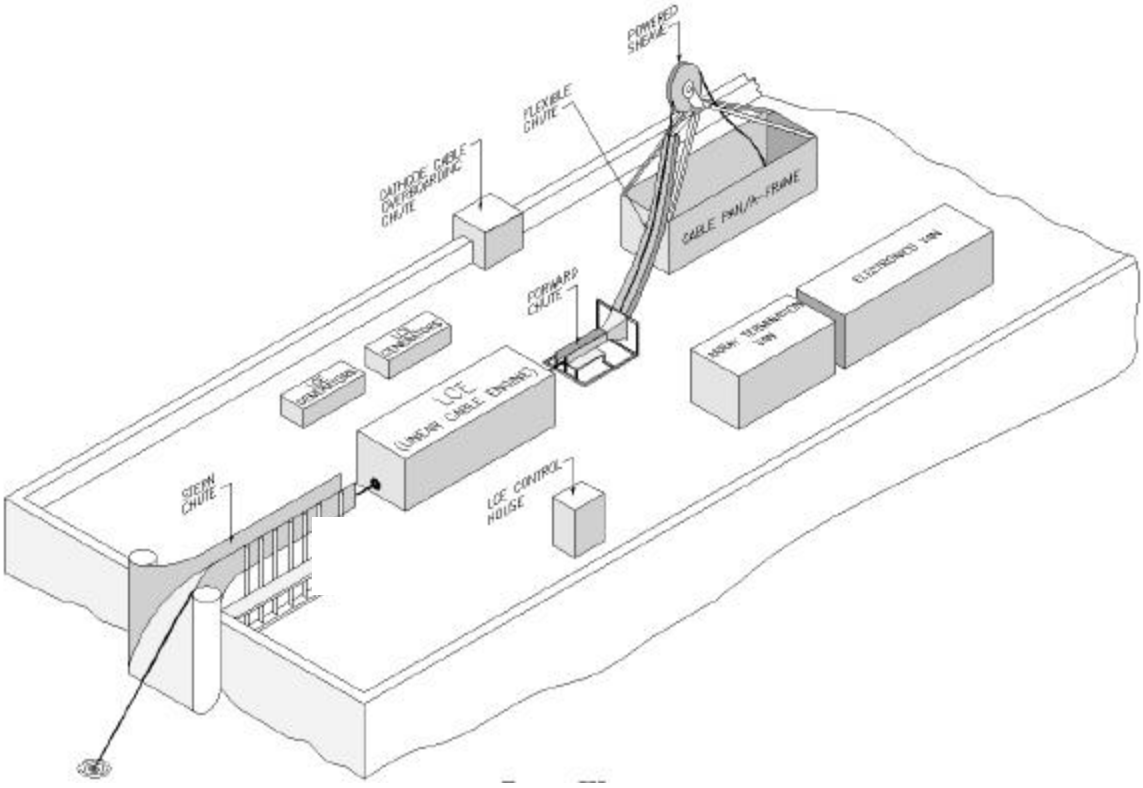


Figure III - 6
Deployment/Recovery Subsystem
PROC and Minivan

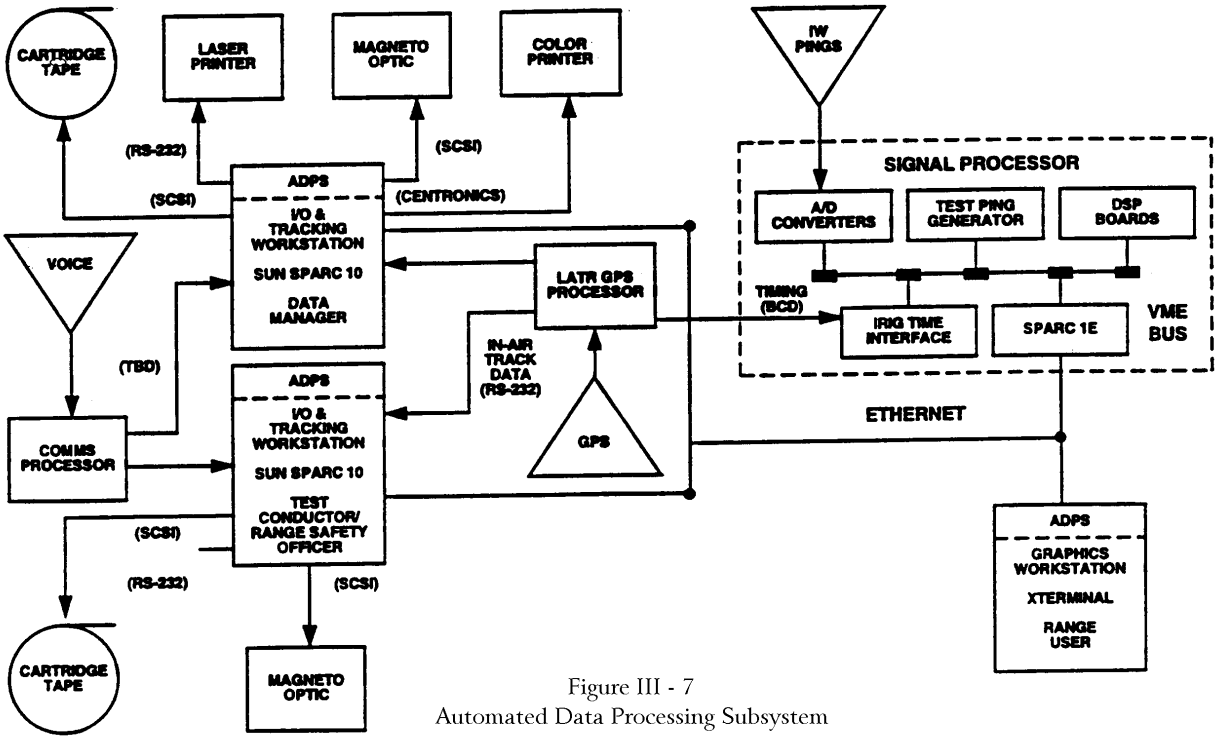


Figure III - 7
Automated Data Processing Subsystem

Figure III - 7
Automated Data Processing Subsystem

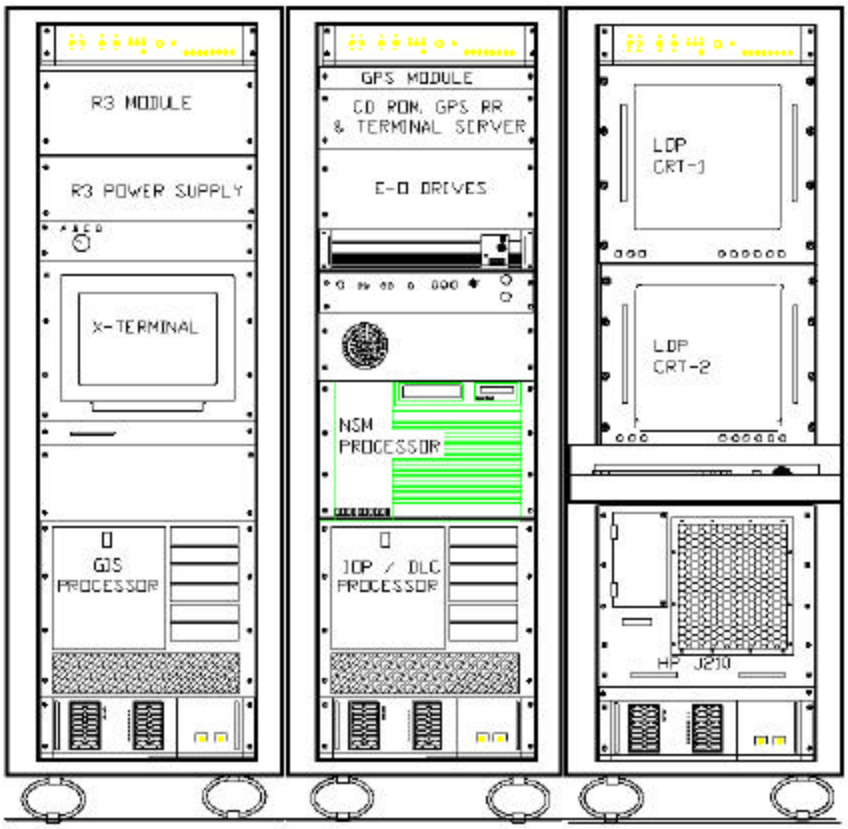


Figure III - 8
PTS/LATR Equipment Rack

## PORTABLE TRACKING SYSTEM EQUIPMENT

| Equipment | Mfr | Qty |
|---|---|---|
| **Deployment/Recovery Subsystem** | | |
| Cable Pan | Alliant Tech | 2 |
| Cable Pan railing | Alliant Tech | 1 |
| Stern Chute | Alliant Tech | 1 |
| Forward Chute | Alliant Tech | 1 |
| Flexible Chute | Alliant Tech | 1 |
| A-Frame Aft Leg | Alliant Tech | 1 |
| A-Frame Fwd Leg | Alliant Tech | 1 |
| A-Frame ladder Cage | Alliant Tech | 1 |
| A-Frame Platform | Alliant Tech | 1 |
| Powered Sheave | Alliant Tech | 1 |
| Portable Hydraulic Unit | | 1 |
| Linear Cable Engine (LCE) | Caley | 2 |
| LCE Control Booth | Caley | 1 |
| LCE Control Booth A/C Unit | | 1 |
| Diesel Generators 200 kw | | 2 |
| **In-Water Subsystem Equipment** | | |
| Standard Sensor Node Assemblies | Alliant Tech | 100 |
| a) Electronic Canister | | |
| b) Hydrophone with Cage | | |
| c) Farings (4-each unit) | | |
| Low Frequency Sensor Node Assemblies | Alliant Tech | 6 |
| a) Electronic Canister | | |
| b) Omniphone | | |
| c) Farings (4-each unit) | | |
| Internode Cable Assemblies | Vector Cable | 95 |
| Anchors | Alliant Tech | 2 |
| Tail Cable | Vector Cable | 2 |
| Anodes | Alliant Tech | 2 |
| Anchor/Anode Cable | Vector Cable | 2 |
| Anode/Sensor Node Cable | Vector Cable | 2 |
| Trunk Cable | Vector Cable | 2 |

Table III-2

| | | |
|---|---|---|
| | | JA1-105w<br>N61339-97-C-0001<br>P00026 |
| Cathode with Holder | Alliant Tech | 1 |

Table III-2

## PORTABLE TRACKING SYSTEM EQUIPMENT

| Equipment | Mfr | Qty |
|---|---|---|
| **In-Water Subsystem Equipment Cont.** | | |
| Cathode Cable | Alliant Tech | 1 |
| Acoustic RF Telemetry Buoys | | 36 |
| a) RF Sonobuoy Transceivers | | |
| b) Antenna | | |
| c) Cable/anchor/hydrophone Assemblies | | |
| **Shore/Shipboard Subsystem Equipment** | | |
| Telescoping Antenna | | 1 |
| Portable Range Ops. Center Van (PROC) (10 X 20 Ft) | NUWC | 1 |
| Electronics Racks | NUWC | 8 |
| RSSI Level Indicator | NUWC | 1 |
| Audio Control Panel 2006 | Novus | 3 |
| Datum Time Clock | Datum | 1 |
| Datum Satellite Time Clock | Datum | 1 |
| Serial Parallel Controller | | 2 |
| MS50R Radio Beacon Receiver | Magnovox | 1 |
| RS422-RS232 Converter | | 1 |
| DC Power Supply | | 1 |
| RF Modem Interface | | 1 |
| Blue Bridges | | 2 |
| Power Supply | | 1 |
| Speakers | | 4 |
| UHF/VHF Radios | | 4 |
| HF Radio | | 1 |
| Switch Matrix | Aiken Systems | 1 |
| Switch Matrix Interface | NUWC | 1 |
| Signal Distribution System | NUWC | 4 |
| Digital Signal Processor (DSP) 64 ch. | NUWC | 1 |
| DSP Diagnostic Panel | NUWC | 1 |
| RF Buoy Receiver | | 2 |
| Audio Control Unit | | 1 |

Table III-2 (Cont.)

| | |
|---|---|
| Compass Display Unit | 1 |

Table III-2 (Cont.)

# PORTABLE TRACKING SYSTEM EQUIPMENT

| Equipment | Mfr | Qty |
|---|---|---|
| **Shore/Shipboard Subsystem Equipment Cont.** | | |
| Electronics Equipment Van (Mini Van) (8 X 10 Ft.) | | |
| Demultiplexer Power Supply | | 1 |
| Node Cable Power Supply | | 2 |
| Node Cable Power Supply | | 1 |
| Switching Unit | Alliant Tech | 1 |
| Low Voltage Shutdown Panel | Alliant Tech | 1 |
| Hydrophone Patch Modules | Alliant Tech | 4 |
| Test Ping Distribution Panel | Alliant Tech | 1 |
| Hydrophone Monitoring Unit | Alliant Tech | 1 |
| Digital Signal Processor (DSP) 50 ch. | NUWC | 1 |
| Signal Processor Power Supply | | 1 |
| Coleman Air Conditioners | Coleman | 2 |
| Tactical Advanced Computer Four (TAC-4) | Hewlett Packard | 1 |
| HP-742rt VME-form Computers | Hewlett Packard | 2 |
| AN/URY-3 Transceivers | Microcom | 2 |
| MX9112R Differential GPS Receiver | Leica | 1 |
| **PTS Equipment Spares List** | | |
| VME Electronics Chassis | | 1 |
| Anodes | Alliant Tech | 2 |
| Trunk Cables | Vector Cable | 2 |
| Hydrophone Assemblies | Alliant Tech | 12 |
| Hydrophone Cage Assemblies | Alliant Tech | 14 |
| Disposable Parts Kits | Alliant Tech | 1 |
| Titanium Pressure Housings | Alliant Tech | 2 |
| LCE Spares Kits | Caley | 1 |

Table III-2 (Cont.)

# XX. PUBLIC WORKS

## 1. MAINTENANCE AND REPAIR

### A. GENERAL

AUTEC's Site 1 on Andros Island, together with the various downrange sites, encompass a variety of structures, buildings, installed appliances and service systems and equipment, and utility systems very similar to that which would be found in a small town. Maintaining this property in a state of good repair is essential both for safe and efficient operation and to maximize service life.

### B. DESCRIPTION

Table XX-1 provides a representative list, by NAVFAC P-72 category code, of AUTEC's Class II Real Property (encompassing buildings, structures, utility systems, roads, sidewalks, fences, helipads, piers, breakwaters, off-shore instrumentation towers, dolphins, etc.). Table XX-2 provides a representative list of portable facilities such as trailers, vans, temporary offices, etc. Table XX-3 provides a list of boilers and unfired pressure vessels. In each case, actual inventories are as provided by NUWC. For purposes of this Specification, these will be referred to collectively as facilities.

Maintenance is construed to mean recurring, periodic, or scheduled work, required to preserve the condition, operability, safety, habitability, or appearance of such property, so as to ensure its continued serviceability for its designated purpose. Repair (e.g. corrective maintenance) is the correction of a condition, resulting from deterioration or breakage, which detracts from, or precludes such serviceability, and restores a facility or service to such condition that it may be effectively and efficiently utilized for its designed purpose through overhaul, reprocessing, or replacement of components or material.

Maintenance and repair of real property and grounds, as described, is required for all of AUTEC's Andros Island sites. To support this task, a public works compound is provided at Site 1, containing air conditioning, electrical, plumbing, carpentry, and paint shops. A nursery and grounds equipment storage shed are separately located.

Maintenance of AUTEC's West Palm Beach, FL, Headquarters facility is provided by GSA.

## C. CONTRACTOR RESPONSIBILITIES

1. The Contractor shall provide for the preventative maintenance of all of AUTEC's Andros Island facilities in accordance with the Workload Factors given in paragraph D, Applicable Documents cited in paragraph F, and other requirements stated below. Special requirements may be tasked by NUWC Work Order or Letter of Direction. Periodic preventative maintenance work shall be scheduled and performed at a frequency to preclude significant deterioration or loss of any facility, except as may specifically be allowed by NUWC.

2. The general approach to maintaining/repairing AUTEC's facilities is that routine day-to-day tasks shall be performed by the Contractor. The Contractor may propose use of procured services or other means to support occasional, extraordinary, or specialty requirements related to this work area. Specific arrangements for such support shall be made by the Contractor on a case-by-case basis considering cost effectiveness, schedule, or other requirements as approved by NUWC. The Contractor may establish a program of providing materials to all residents to perform limited repair/maintenance actions on their assigned quarters. Such a program must have sufficient controls to ensure that Government material is not used for unauthorized facility alterations or put to private use.

3. The Contractor shall provide for the preventative maintenance of all utility service, alarm, telephone, appliance, and similar facility-related equipment and systems installed in, or supportive of, AUTEC's Andros Island facilities. The Contractor shall follow energy management guidelines for heating/cooling/lighting/and domestic hot water systems as contained in OPNAVINST 4100.5 (Series) and APP 8-45G. Periodic maintenance work shall be scheduled and performed at a frequency to preclude significant deterioration or loss, except as may specifically be allowed by NUWC.

4. The Contractor shall provide for prompt repair of detected/reported facilities, and facilities-related equipment, deficiencies. Repair actions shall be categorized and work scheduled in the following priority:

a. Correction of conditions which pose an immediate life-threatening safety hazard.

b. Work items impacting AUTEC's ability to perform its mission.

c. Work items which imminently threaten loss of Government property.

d. Correction of other identified safety-related deficiencies.

e. Other items.

5. The Contractor shall assure that all maintenance and repair work is performed to commercial standards and the codes cited in paragraph F, except as may otherwise be required by any overriding U.S. Navy standards.

6. The Contractor shall provide for maintenance of the road between AUTEC's Site 1 on Andros Island and the Andros Town Airport. The road shall be maintained in a serviceable condition as required to allow safe passage of emergency vehicles.

7. The Contractor shall provide for maintenance of the grounds and cleared areas at all of AUTEC's Andros Island sites giving consideration to guidelines contained in the AUTEC Comprehensive Eco-System and Cultural Resources Management Plan. Maintenance will typically consist of such work as planting and cutting grass, planting and trimming bushes, shrubbery, and trees, removing debris, general beautification, and items of like nature, and shall be scheduled so as to maintain good appearance. Yard areas adjacent to "family quarters" shall be the responsibility of the occupants; the Contractor shall maintain yard areas adjacent to unoccupied "family" quarters (see also Chapter XXI (2) of this Specification). The Contractor shall also provide for periodic roadside cleaning between the Andros Town Airport and the main gate at Site 1.

8. The Contractor shall provide janitorial service for all of AUTEC's buildings and like structures on Andros Island. Shop spaces, warehouses, utility plants, and other industrial areas shall be maintained in a clean and neat manner. Housing units at Site 1 shall be cleaned as described by requirements cited in Chapter XXI (2) of this Specification. Office spaces shall be cleaned daily, Monday through Friday. Work areas used seven days per week will be cleaned seven days per week. Daily cleaning shall encompass servicing of rest rooms, emptying of ashtrays and wastebaskets, sweeping, and damp mopping of uncarpeted floors. Heavy cleaning such as stripping and waxing of tile floors and rug shampooing, as well as dusting, washing walls, etc., shall be scheduled so as to maintain good appearance. Cleaning shall be

scheduled so as not to interfere with scheduled test operations. Janitorial personnel shall be trained on the hazards associated with asbestos IAW OCD-(22.2)-02-XX. (Note: floor tiles may contain asbestos).

9. The Contractor shall provide an adequate staff of persons, qualified in the various trades, and capable of not only performing the tasks described, and producing finished products of professional quality as is inherent to the maintenance and repair of the facilities and associated equipments installed at AUTEC, but also of performing the following:

a. Developing and maintaining an inventory of Government provided materials, consumables, expendables, and repair/spare parts as may be necessary to support AUTEC's facilities maintenance and repair needs in accordance with the policies provided in Chapter XXI (1) of this Specification.

b. Providing technical support to Purchasing for procurements related to facilities maintenance and repair projects including: specification writing; technical evaluation of proposals; cost review; quality review; technical qualification of sources; preparation of inspection and acceptance procedures; and conduct of acceptance inspections/tests as appropriate.

c. Maintaining a central point to receive/process trouble calls and provide rapid response to trouble calls.

d. Arranging for manufacturer or other procured support of facilities maintenance and repair functions on a case-by-case basis considering cost effectiveness, schedule, or other requirements as approved by NUWC.

e. Providing NUWC Work Order support.

10. The Contractor shall implement and adhere to a facilities inspection program, maintain records and prepare and submit both a Backlog of Maintenance and Repair (BMAR) and an Annual Inspection Summary (AIS), in accordance with the requirements of NAVFAC MO-322 and OPNAVINST 11010.34 (series).

11. - - - - - *deleted* - - - - -

12. The Contractor shall implement and adhere to a work request program, as required by NAVFAC MO-321. Work requests shall be reviewed, and properly categorized, as required by OPNAVINST 11011.20 (series) and APP 8-35G. The Contractor must obtain approval from NUWC prior to commencing work on any maintenance or repair project requiring more than 50 manhours and/or more than $1000 worth of material except under emergency conditions.

13. Personnel assigned to work on air conditioning, refrigeration, or other equipments or systems containing Ozone Depleting Substances must be certified to perform such work as described in Chapter XXII (2) of this Specification. The Contractor shall, as required by The Final Governing Standards for Andros Island, assure that no Class 1 or Class 2 Ozone Depleting Substances are intentionally vented to the atmosphere in the course of maintaining, servicing, repairing, or disposing of any air conditioning appliances, refrigeration units, etc.

14. Personnel assigned to work on AUTEC's potable water system must be certified to perform such work, and any work performed must be closely monitored as described in Chapter XX (2) of this Specification.

15. Projects involving, or suspected of involving, asbestos containing building material shall be managed in accordance with the requirements of The Final Governing Standards for Andros Island, OPNAVINST 5090.1 (Series) and OCD-(22.1)-02-XX. See also Chapter XXII (2) of this Specification.

16. The Contractor shall collect data, maintain records, and submit reports as may be required by the Applicable Documents listed in paragraph F. The Contractor shall assist NUWC in the conduct of any facilities inspections, (including periodic boiler/unfired pressure vessel inspections by NAVFAC) surveys, audits, etc. required/conducted by outside authority. The Contractor shall respond promptly to any special requests for data/reports.

17. The Contractor shall also be responsible for the maintenance, repair, and cleanliness of the Contractor's airport terminal facilities provided under this contract, at the West Palm Beach International Airport.

18. The Contractor shall submit all NUWC-required technical and administrative reports, described in Chapter XXV of this Specification, as pertain to facilities maintenance and repair functions.

## D. WORKLOAD FACTORS

1. As derived from the information presented in paragraph C.

2. Facilities maintenance and repair support services shall operate during normal Andros Island business hours, Monday through Friday holidays excepted. Typically, service calls average 650 per month.

3. Emergency support must be available 24 hours per day, 365 days per year.

## E. KEY PERSONNEL/PERSONNEL QUALIFICATIONS

None.

## F. APPLICABLE DOCUMENTS

| | |
|---|---|
| Final Governing Standards for Andros Island; | Prepared by Commander in Chief, U.S. Atlantic Fleet (CINCLANTFLT) |
| SECNAVINST 11010.5 (series); | Facilities Projects for Minor Construction, Maintenance of Real Property, and Equipment Installation; Approval Authorities for |
| OPNAVINST 4100.5 (series); | Energy Management |
| OPNAVINST 11010.20 (series); | Facilities Projects Manual |
| OPNAVINST 11010.34 (series); | Instructions for Preparation and Submission of the Type "A" Annual Inspection Summary and Narrative Assessment |
| NAVFAC MO-321; | Maintenance Management of Public Works Utilities for Small Activities |
| NAVFAC MO-322 Vol.1; | Inspection of Shore Facilities |
| Vol 2; | Inspection of Public Works and Utilities |
| NAVFAC (Publication) P-72; | Department of the Navy Facility Category Codes |
| OCD-(20.1)-01-XX; | Grounding Systems Testing and Grounding Systems for Ordnance Storage and Operating Facilities |
| OCD-(20.4)-22-XX; | Public Works Engineering, Construction and Maintenance Scheduling |
| OCD-(22.1)-02-XX; | Asbestos Containing Building Material (ACBM) Operation and Maintenance |

| | |
|---|---|
| Other OCDs; | Relevant/Related OCDs as may be listed in Table XV-4 |
| APP 4-13G; | Key and Lock Control Program |

| | |
|---|---|
| APP 8-35G; | Base Support Planning and Estimating Request |
| APP 8-45G; | AUTEC Energy Management Program |
| APP 11-3G; | Fire Protection Policy |
| APP 11-5G; | Hurricane Plan, Andros Island |
| APP 11-9G; | Surface Preparation and Painting |
| APP 11-12G; | Policy for AUTEC Project Bloodborne Pathogens (BBP) Program |
| APP 11-18G; | Confined and Enclosed Space Safety |

AUTEC Comprehensive Eco-System and Cultural Resources Management Plan

Uniform Building Codes

National Electrical Code

National Fire Protection Association Codes

Florida Department of Transportation Road Specifications

Table XX-1

Table XX-1 (cont.)

Table XX-1 (cont.)

Table XX-1 (cont.)

Table XX-1 (cont.)

Table XX-1 (cont.)

Table XX-1 (cont.)

Table XX-1 (cont.)

Table XX-1 (cont.)

Table XX-1 (cont.)

Table XX-1 (cont.)

Table XX-1 (cont.)

Table XX-1 (cont.)

Table XX-1 (cont.)

Table XX-1 (cont.)

Table XX-1 (cont.)

Table XX-1 (cont.)

Table XX-1 (cont.)

Table XX-1 (cont.)

Table XX-1 (cont.)

Table XX-1 (cont.)

Table XX-1 (cont.)

Table XX-1 (cont.)

# RELOCATABLE FACILITIES

| NOMENCLATURE | ASSET_ID |
|---|---|
| BOX FLAMMABLE STORAGE | 63821000895 |
| RELOCATABLE SHOP | 63821000896 |
| RELOCATABLE VAN-ROV | 63821000904 |
| RELOCATABLE GUARD/SHACK | 63821000910 |
| BOX CONNEX | 63821001186 |
| BOX CONNEX | 63821001385 |
| BOX CONNEX | 63821001421 |
| BOX CONNEX | 63821001422 |
| BOX CONNEX | 63821001423 |
| BOX CONNEX | 63821001656 |
| BOX CONNEX | 63821001657 |
| BOX CONNEX | 63821001658 |
| BOX CONNEX | 63821001667 |
| BOX CONNEX | 63821001668 |
| BOX CONNEX | 63821001670 |
| BOX CONNEX | 63821001671 |
| BOX CONNEX | 63821001743 |
| RELOCATABLE HAZ/MAT | 63821001749 |
| BOX CONNEX | 63821002000 |
| BOX CONNEX | 63821002001 |
| BOX CONNEX | 63821002004 |
| RELOCATABLE SHED | 63821002008 |
| BOX CONNEX | 63821002017 |
| BOX CONNEX | 63821002022 |
| BOX CONNEX | 63821002025 |
| BOX CONNEX | 63821002026 |
| BOX CONNEX | 63821002032 |
| BOX CONNEX | 63821002049 |
| BOX CONNEX | 63821002050 |
| RELOCATABLE HAZ/MAT | 63821002221 |
| RELOCATABLE HAZ/MAT | 63821002223 |
| RELOCATABLE HAZ/MAT | 63821002224 |
| SHACK TEST RELOCATABLE | 63821002359 |
| SHACK TEST RELOCATABLE | 63821002360 |
| SHACK TEST RELOCATABLE | 63821002374 |
| RELOCATABLE HAZ/MAT | 63821002422 |

Table XX-2

# RELOCATABLE FACILITIES

| NOMENCLATURE | ASSET_ID |
|---|---|
| TRAILER SEMI 40 FT | 63821003783 |
| TRAILER SEMI 45 FT | 63821003973 |
| RELOCATABLE SHACK LAUNCH | 63821004140 |
| RELOCATABLE SHACK LAUNCH | 63821004141 |
| RELOCATABLE STAND | 63821004264 |
| RELOCATABLE STAND | 63821004265 |
| RELOCATABLE TANK | 63821004266 |
| RELOCATABLE STORAGE BOX | 63821004269 |
| RELOCATABLE STORAGE HZMT | 63821004270 |
| RELOCATABLE STORAGE HZMT | 63821004271 |
| RELOCATABLE STAND | 63821004277 |
| RELOCATABLE STAND | 63821004278 |
| RELOCATABLE STAND | 63821004279 |
| RELOCATABLE STAND | 63821004280 |
| RELOCATABLE MAGAZINE | 63821004298 |
| RELOCATABLE MAGAZINE | 63821004299 |
| RELOCATABLE MAGAZINE | 63821004314 |
| RELOCATABLE STORAGE | 63821004315 |
| RELOCATABLE STORAGE | 63821004316 |
| RELOCATABLE STORAGE | 63821004317 |
| RELOCATABLE RADAR VAN | 63821004318 |
| RELOCATABLE VAN - SATS | 63821004319 |
| RELOCATABLE VAN - SATS | 63821004320 |
| RELOCATABLE VAN - SATS | 63821004321 |
| RELOCATABLE STORAGE VAN | 63821004324 |
| RELOCATABLE STORAGE VAN | 63821004325 |
| RELOCATABLE STORAGE VAN | 63821004326 |
| RELOCATABLE STORAGE | 63821004327 |
| RELOCATABLE STORAGE | 63821004328 |
| RELOCATABLE STORAGE | 63821004329 |
| RELOCATABLE STORAGE | 63821004330 |
| RELOCATABLE STORAGE SHED | 63821004331 |
| RELOCATABLE STORAGE SHED | 63821004332 |
| RELOCATABLE STORAGE SHED | 63821004333 |
| RELOCATABLE STORAGE SHED | 63821004334 |
| RELOCATABLE STORAGE SHED | 63821004335 |

Table XX-2 (cont.)

Table XX-2 (cont.)

# RELOCATABLE FACILITIES

| NOMENCLATURE | ASSET_ID |
|---|---|
| RELOCATABLE STORAGE SHED | 63821004336 |
| RELOCATABLE STORAGE SHED | 63821004337 |
| RELOCATABLE STORAGE SHED | 63821004338 |
| RELOCATABLE STORAGE SHED | 63821004339 |
| BOX CONNEX | 63821004340 |
| BOX CONNEX | 63821004341 |
| BOX CONNEX | 63821004342 |
| BOX CONNEX | 63821004343 |
| BOX CONNEX | 63821004344 |
| RELOCATABLE STORAGE SHED | 63821004345 |
| RELOCATABLE STORAGE SHED | 63821004346 |
| RELOCATABLE STORAGE SHED | 63821004347 |
| RELOCATABLE STORAGE VAN | 63821004351 |
| RELOCATABLE STORAGE VAN | 63821004352 |
| BOX CONNEX | 63821004355 |
| BOX CONNEX | 63821004356 |
| BOX CONNEX | 63821004357 |
| BOX CONNEX | 63821004358 |
| BOX CONNEX | 63821004359 |
| BOX CONNEX | 63821004360 |
| BOX CONNEX | 63821004363 |
| RELOCATABLE STORAGE SHED | 63821004517 |
| RELOCATABLE STORAGE SHED | 63821004518 |
| RELOCATABLE STORAGE SHED | 63821004519 |
| RELOCATABLE STORAGE SHED | 63821004520 |
| RELOCATABLE STORAGE SHED | 63821004521 |
| RELOCATABLE STORAGE SHED | 63821004522 |
| RELOCATABLE STORAGE SHED | 63821004523 |
| RELOCATABLE STORAGE SHED | 63821004524 |
| RELOCATABLE STORAGE SHED | 63821004525 |
| RELOCATABLE STORAGE SHED | 63821004526 |
| RELOCATABLE STORAGE SHED | 63821004527 |
| RELOCATABLE OFFICE SHED | 63821004528 |
| RELOCATABLE STORAGE SHED | 63821004532 |
| RELOCATABLE STORAGE SHED | 63821004533 |
| RELOCATABLE LABORATORY | 63821004535 |

Table XX-2 (cont.)

# RELOCATABLE FACILITIES

| NOMENCLATURE | ASSET_ID |
|---|---|
| RELOCATABLE STORAGE SHED | 63821004538 |
| RELOCATABLE STORAGE SHED | 63821004539 |
| RELOCATABLE STORAGE SHED | 63821004540 |
| RELOCATABLE STORAGE SHED | 63821004541 |
| RELOCATABLE STORAGE SHED | 63821004542 |
| RELOCATABLE STORAGE SHED | 63821004543 |
| RELOCATABLE STORAGE SHED | 63821004544 |
| RELOCATABLE STORAGE SHED | 63821004545 |
| RELOCATABLE STORAGE SHED | 63821004546 |
| RELOCATABLE STORAGE SHED | 63821004547 |
| RELOCATABLE STORAGE HZMT | 63821004672 |
| RELOCATABLE STORAGE HZMT | 63821004673 |
| RELOCATABLE STORAGE HZMT | 63821004674 |
| RELOCATABLE STORAGE HZMT | 63821004677 |
| RELOCATABLE STORAGE HZMT | 63821004678 |
| RELOCATABLE OFFICE | 63821005901 |
| RELOCATABLE OFFICE | 63821005902 |
| RELOCATABLE SHED | 63821006003 |
| RELOCATABLE OFFICE | 63821006082 |
| RELOCATABLE OFFICE | 63821006083 |
| RELOCATABLE HOUSING | 63821006214 |
| RELOCATABLE HOUSING | 63821006215 |
| RELOCATABLE LAUNDRY | 63821006216 |
| RELOCATABLE VAN REPAIR | 63821006217 |
| RELOCATABLE STORAGE | 63821006218 |
| RELOCATABLE OFFICE | 63821006349 |
| RELOCATABLE OFFICE | 63821006350 |
| RELOCATABLE OFFICE | 63821006351 |
| RELOCATABLE STORAGE | 63821007339 |
| BOX CONNEX | 63821007617 |
| BOX CONNEX | 63821007618 |
| BOX CONNEX | 63821007619 |
| BOX CONNEX | 63821007625 |
| BOX CONNEX | 63821007626 |
| BOX CONNEX | 63821007627 |
| BOX CONNEX | 63821007628 |

Table XX-2 (cont.)

# RELOCATABLE FACILITIES

| NOMENCLATURE | ASSET_ID |
|---|---|
| BOX CONNEX | 63821007629 |
| BOX CONNEX | 63821007630 |
| BOX CONNEX | 63821007631 |
| BOX CONNEX | 63821007632 |
| BOX CONNEX | 63821007633 |
| BOX CONNEX | 63821007635 |
| BOX CONNEX | 63821007636 |
| BOX CONNEX | 63821007637 |
| BOX CONNEX | 63821007638 |
| BOX CONNEX | 63821007639 |
| BOX CONNEX | 63821007640 |
| BOX CONNEX | 63821007641 |
| BOX CONNEX | 63821007642 |
| SHED STORAGE | 63821007742 |
| SHED STORAGE | 63821007743 |
| SHED STORAGE | 63821007744 |
| SHED STORAGE | 63821007745 |
| RELOCATABLE VAN PTS MINI | 63821008617 |
| RELOCATABLE VAN PTS MINI | 63821008631 |
| RELOCATABLE ELEC SHELTER | 63821008920 |
| BOX CONNEX | 63821009456 |
| SEMITRAILER,VAN | 63821014822 |

Table XX-2 (cont.)

# RELOCATABLE FACILITIES

| Nomenclature | ASSET_ID |
|---|---|
| HOUSING RELOCATABLE | 63821001854 |
| HOUSING RELOCATABLE | 63821001855 |
| HOUSING RELOCATABLE | 63821001856 |
| RELOCATABLE HOUSING | 63821002310 |
| RELOCATABLE HOUSING | 63821005823 |
| RELOCATABLE HOUSING | 63821005831 |
| RELOCATABLE HOUSING | 63821005843 |
| RELOCATABLE HOUSING | 63821005844 |
| RELOCATABLE HOUSING | 63821005845 |
| RELOCATABLE HOUSING | 63821005846 |
| RELOCATABLE HOUSING | 63821005847 |
| RELOCATABLE HOUSING | 63821005850 |
| RELOCATABLE HOUSING | 63821005851 |
| RELOCATABLE HOUSING | 63821005852 |
| RELOCATABLE HOUSING | 63821005853 |
| RELOCATABLE HOUSING | 63821005854 |
| RELOCATABLE HOUSING | 63821005855 |
| RELOCATABLE HOUSING | 63821005856 |
| RELOCATABLE HOUSING | 63821006214 |
| RELOCATABLE HOUSING | 63821006215 |
| RELOCATABLE HOUSING | 63821006223 |
| RELOCATABLE HOUSING | 63821006224 |
| RELOCATABLE HOUSING | 63821006225 |
| RELOCATABLE HOUSING | 63821006226 |
| RELOCATABLE HOUSING | 63821006227 |
| RELOCATABLE HOUSING | 63821006228 |
| RELOCATABLE HOUSING | 63821006229 |
| RELOCATABLE HOUSING | 63821006230 |
| RELOCATABLE HOUSING | 63821006231 |
| RELOCATABLE HOUSING | 63821006232 |
| RELOCATABLE HOUSING | 63821006233 |
| RELOCATABLE HOUSING | 63821006234 |
| RELOCATABLE HOUSING | 63821006235 |
| RELOCATABLE HOUSING | 63821006236 |
| RELOCATABLE HOUSING | 63821006237 |
| RELOCATABLE HOUSING | 63821006238 |
| RELOCATABLE HOUSING | 63821006239 |

Table XX-2 (cont.)

# RELOCATABLE FACILITIES

| Nomenclature | ASSET_ID |
|---|---|
| RELOCATABLE HOUSING | 63821006240 |
| RELOCATABLE HOUSING | 63821006241 |
| RELOCATABLE HOUSING | 63821006242 |
| RELOCATABLE HOUSING | 63821006243 |
| RELOCATABLE HOUSING | 63821006244 |
| RELOCATABLE HOUSING | 63821006245 |
| RELOCATABLE HOUSING | 63821006246 |
| RELOCATABLE HOUSING | 63821006247 |
| RELOCATABLE HOUSING | 63821006248 |
| RELOCATABLE HOUSING | 63821006249 |
| RELOCATABLE HOUSING | 63821006250 |
| RELOCATABLE HOUSING | 63821006251 |
| RELOCATABLE HOUSING | 63821006252 |
| RELOCATABLE HOUSING | 63821006253 |
| RELOCATABLE HOUSING | 63821006254 |
| RELOCATABLE HOUSING | 63821006255 |
| RELOCATABLE HOUSING | 63821006256 |
| RELOCATABLE HOUSING | 63821006257 |
| RELOCATABLE HOUSING | 63821006258 |
| RELOCATABLE HOUSING | 63821006259 |
| RELOCATABLE HOUSING | 63821006260 |
| RELOCATABLE HOUSING | 63821006261 |
| RELOCATABLE HOUSING | 63821006262 |
| RELOCATABLE HOUSING | 63821006263 |
| RELOCATABLE HOUSING | 63821006264 |
| RELOCATABLE HOUSING | 63821006265 |
| RELOCATABLE HOUSING | 63821006266 |
| RELOCATABLE HOUSING | 63821006267 |
| RELOCATABLE HOUSING | 63821006268 |
| RELOCATABLE HOUSING | 63821006269 |
| RELOCATABLE HOUSING | 63821006270 |
| RELOCATABLE HOUSING | 63821006271 |
| RELOCATABLE HOUSING | 63821006272 |
| RELOCATABLE HOUSING | 63821006273 |
| RELOCATABLE HOUSING | 63821006274 |
| RELOCATABLE HOUSING | 63821006275 |
| RELOCATABLE HOUSING | 63821006276 |

Table XX-2 (cont.)

# RELOCATABLE FACILITIES

| Nomenclature | ASSET_ID |
|---|---|
| RELOCATABLE HOUSING | 63821006277 |
| RELOCATABLE HOUSING | 63821006278 |
| RELOCATABLE HOUSING | 63821006279 |
| RELOCATABLE HOUSING | 63821006280 |
| RELOCATABLE HOUSING | 63821006281 |
| RELOCATABLE HOUSING | 63821006282 |
| RELOCATABLE HOUSING | 63821006283 |
| RELOCATABLE HOUSING | 63821006284 |
| RELOCATABLE HOUSING | 63821006285 |
| RELOCATABLE HOUSING | 63821006286 |
| RELOCATABLE HOUSING | 63821006287 |
| RELOCATABLE HOUSING | 63821006288 |
| RELOCATABLE HOUSING | 63821006289 |
| RELOCATABLE HOUSING | 63821006290 |
| RELOCATABLE HOUSING | 63821006291 |
| RELOCATABLE HOUSING | 63821006292 |
| RELOCATABLE HOUSING | 63821006293 |
| RELOCATABLE HOUSING | 63821006294 |
| RELOCATABLE HOUSING | 63821006295 |
| RELOCATABLE HOUSING | 63821006296 |
| RELOCATABLE HOUSING | 63821006297 |
| RELOCATABLE HOUSING | 63821006298 |
| RELOCATABLE HOUSING | 63821006299 |
| RELOCATABLE HOUSING | 63821006300 |
| RELOCATABLE HOUSING | 63821006301 |
| RELOCATABLE HOUSING | 63821006302 |
| RELOCATABLE HOUSING | 63821006303 |
| RELOCATABLE HOUSING | 63821006304 |
| RELOCATABLE HOUSING | 63821006305 |
| RELOCATABLE HOUSING | 63821006306 |
| RELOCATABLE HOUSING | 63821006307 |
| RELOCATABLE HOUSING | 63821006308 |
| RELOCATABLE HOUSING | 63821006309 |
| RELOCATABLE HOUSING | 63821006310 |
| RELOCATABLE HOUSING | 63821006311 |
| RELOCATABLE HOUSING | 63821006312 |
| RELOCATABLE HOUSING | 63821006313 |

Table XX-2 (cont.)

# RELOCATABLE FACILITIES

| Nomenclature | ASSET_ID |
|---|---|
| RELOCATABLE HOUSING | 63821006314 |
| RELOCATABLE HOUSING | 63821006315 |
| RELOCATABLE HOUSING | 63821006316 |
| RELOCATABLE HOUSING | 63821006317 |
| RELOCATABLE HOUSING | 63821006318 |
| RELOCATABLE HOUSING | 63821006319 |
| RELOCATABLE HOUSING | 63821006320 |
| RELOCATABLE HOUSING | 63821006321 |
| RELOCATABLE HOUSING | 63821006322 |
| RELOCATABLE HOUSING | 63821006323 |
| RELOCATABLE HOUSING | 63821006324 |
| RELOCATABLE HOUSING | 63821006325 |
| RELOCATABLE HOUSING | 63821006326 |
| RELOCATABLE HOUSING | 63821006327 |
| RELOCATABLE HOUSING | 63821006328 |
| RELOCATABLE HOUSING | 63821006329 |
| RELOCATABLE HOUSING | 63821006330 |
| RELOCATABLE HOUSING | 63821006331 |
| RELOCATABLE HOUSING | 63821006332 |
| RELOCATABLE HOUSING | 63821006333 |
| RELOCATABLE HOUSING | 63821006334 |
| RELOCATABLE HOUSING | 63821006335 |
| RELOCATABLE HOUSING | 63821006336 |
| RELOCATABLE HOUSING | 63821006337 |
| RELOCATABLE HOUSING | 63821006338 |
| RELOCATABLE HOUSING | 63821006339 |
| RELOCATABLE HOUSING | 63821006340 |
| RELOCATABLE HOUSING | 63821006341 |
| RELOCATABLE HOUSING | 63821006342 |
| RELOCATABLE HOUSING | 63821006343 |
| RELOCATABLE HOUSING | 63821006344 |
| RELOCATABLE HOUSING | 63821006345 |
| RELOCATABLE HOUSING | 63821006346 |
| RELOCATABLE HOUSING | 63821006352 |
| RELOCATABLE HOUSING | 63821006353 |
| RELOCATABLE HOUSING | 63821006354 |
| RELOCATABLE HOUSING | 63821006355 |

Table XX-2 (cont.)

Note: Housing Trailers, referred to as “Relocatable Housing” in this table, are also listed in Table XXI-I of this Specification.

Table XX-2 (cont.)

BOILER/PRESSURE EQUIPMENT

| EQUIPMENT/MFG | LOCATION | CAPACITY |
|---|---|---|
| Boilers: | | |
| Boiler, Cleaver-Brooks CB-101-50 | Bldg 1202 | 2092 lbs/hr |
| Boiler, Cleaver-Brooks CB-100-50 | Bldg 1207 | 2092 lbs/hr |
| Boiler, Cleaver-Brooks CBH-100-30 | Bldg 1209 | 1255 lbs/hr |
| Unfired Pressure Vessels: | | |
| 1 – Wood Industries | Bldg 1003 | 32.0 Cu ft |
| 1 – Steel Fab. Co. | Bldg 1207 | 13.1 Cu ft |
| 1 – Manchester | Bldg 1411 | 32.0 Cu ft |
| 4 – Hanson | Bldg 1404 | 27.0 Cu ft |
| - - - - - *deleted* - - - - - | | |
| 1 – Manchester | Bldg 1406 | 10.0 Cu ft |
| 1 – Manchester | Bldg 1602 | 33.0 Cu ft |
| 1 – Brunner | Bldg 1602 | 30.5 Cu ft |
| 2 – Brunner | Bldg 2003 | 16.0 Cu ft |
| 2 – Brunner | Bldg 3003 | 16.0 Cu ft |
| 2 – Brunner | Bldg 4003 | 16.0 Cu ft |
| - - - - - *deleted* - - - - - | | |
| 1 – Manchester | Bldg 1414 | 32.0 Cu ft |
| - - - - - *deleted* - - - - - | | |
| - - - - - *deleted* - - - - - | | |
| 1 - Wood | Bldg 1714 | 11.0 Cu ft |
| - - - - - *deleted* - - - - - | | |
| 1 – Buckeye | Bldg 1001 | 28.0 Cu ft |
| 1 – Brunner | Bldg 1678 | 29.0 Cu ft |
| 1 – Melben Products | Bldg 1922 | 17.5 Cu ft |
| 1 – Texas Welding | Bldg 1626 | 16.0 Cu ft |
| 1 – Manchester | Bldg 1537 | 16.0 Cu ft |
| - - - - - *deleted* - - - - - | | |
| 1 – Wood | C-501 | 11.0 Cu ft |
| 1 – Melben Products | Bldg 1934 | 8.6 Cu ft |
| - - - - - *deleted* - - - - - | | |

Table XX-3

BOILER/PRESSURE EQUIPMENT

| EQUIPMENT/MFG | LOCATION | CAPACITY |
|---|---|---|
| Unfired Pressure Vessels (cont): | | |
| 1 – Brunner | Bldg 1938 | 13.3 Cu ft |
| 1 - Roy Hanson | Bldg 1687 | 27.0 Cu ft |
| 1 - Steel Fab, Inc. | Bldg 1641 | 17.8 Cu ft |
| - - - - - *deleted* - - - - - | | |
| 1 – Brunner | Bldg 1684 | 20.3 Cu ft |
| 1 – Melben Products | Bldg 1914 | 11.3 Cu ft |
| 1 – Hanson | Bldg 1033 | 27.0 Cu ft |
| 1 – Manchester | Bldg 1414 | 32.0 Cu ft |
| 1 – Melben Products | Bldg 1539 | 11.3 Cu ft |
| 1 – Karguard | Bldg 1681 | 8.0 Cu ft |

# V. RANGE DATA PROCESSING

## A. GENERAL

Range Data Processing encompasses all Information Technology operations associated with real-time range-data collection and display, plus all of AUTEC's post-test data processing, data analysis, and subsequent data product distribution operations.

## B. DESCRIPTION

Weapons Range Data Processing begins at the AUTEC Real-time Graphic On-Line System (ARGOS) Data Distribution System (DDS), shown in Figure V-1, which receives inputs from both in-air and in-water range instrumentation systems (see also Chapter II (1) of this Specification). During operations on the Weapons Range, ARGOS records TSPI for all tracked objects and drives displays in AUTEC's Real Time Display Centers (see also Chapter IV-1(1) of this Specification).

Post-test data processing, analysis, and data product distribution functions described herein are required for data originating on the Weapons Range as well as for FORACS, Acoustic Testing, and programs conducted in the open ocean, at shallow water test sites, using AUTEC’s Portable Tracking System, and at other remote locations. The ARGOS post-test Network Segment is described in Chapter VI(3) of this Specification.

The majority of IT resources utilized for data processing exist on AUTEC's classified Local and Wide Area Networks (LAN/WAN), though use of AUTEC's unclassified LAN/WAN is also required (see also Chapters VI (1) through VI (3) of this Specification).

This chapter addresses the application and operation of IT resources for data production. Maintenance and life-cycle management of these resources are addressed in Chapter VI of this Specification

.

## C. CONTRACTOR RESPONSIBILITIES

1. The Contractor shall man and operate all of AUTEC's real-time and post-test data processing systems (see also Chapters VI (2) and VI (3) of this Specification) in accordance with the AUTEC Schedule of Operations, published Operations Directives, Workload Factors given in paragraph D, Applicable Documents cited in paragraph F, and other requirements stated below. Special requirements may be tasked by NUWC Work Order or Letter of Direction.

2. The Contractor shall provide a Data Processing Supervisor, or similar person (exact title to be established by the Contractor) who shall be responsible for meeting all scheduled Data Processing support/delivery requirements.

3. The Contractor shall provide a qualified Data Controller to support Real-Time Display Center (see also Chapters II (1) and IV (1) of this Specification) functions, whenever a test or operation is scheduled to be conducted on AUTEC's Weapons Range, to coordinate computer/data support for established test requirements, provide graphic display set-up for Range Users, manage test-related data files, etc. Specific Data Controller duties and responsibilities are as stated in OCD-(05)-01-XX.

4. The Contractor shall provide knowledgeable personnel to interface with Range Users, Test Planning, and others as may be necessary, to assist in the definition of data products needed to satisfy requirements stated in relevant Operations Directives (ODs). These personnel shall attend pre and post-test briefings as required (see also Chapter IV (1) of this Specification).

5. The Contractor shall support AUTEC's data processing requirements using only approved/certified software (see also Chapter VI (1) of this Specification).

6. The Contractor shall follow rigorous quality control procedures for all AUTEC-generated data and shall comply with AUTEC data handling procedural requirements as specified in applicable OCDs. The Contractor may separately receive and forward Range User-generated data without responsibility for the content or quality of such data.

7. The Contractor shall be responsible for the post-test analysis, production, and delivery of finished data products, of professional quality, to designated recipients in a timely manner (or as scheduled by applicable OD). Timeliness in some cases may include real-time or quick-look electronic transfer or overnight delivery of data.

8. The Contractor shall provide analyst support for all MK-48 Mods 4, 5, and 6 (exercise) Torpedo firings. This function requires: pre-test, real-time, and post-test coordination with the

applicable IMA/test vessel/squadron/Type Commander personnel; monitoring of real-time tests; post-test data analysis involving the merging of shipboard data with tracking data; evaluation of internally recorded weapon data; a systems (error) analysis of each firing event; and if requested by NUWC, a de-briefing of the ship/squadron/Type Commander test team(s). The final function is preparation of a formal report, in Naval message format, summarizing the results of each firing event (e.g. hit/miss/invalid) together with supporting data (COMSUBLANT /COMSUBPACNIST C 8510.1 (series) refers). Personnel will use the Navy's Desktop Tactical Computer (TAC-III) along with the VAX 8350, Micro Vax II, and other classified WAN AIS resources.

9. The Contractor shall maintain a library of archived test data consisting of plots, listings, logs, electronic media, deliverables, etc. With the concurrence of NUWC, the Contractor shall establish procedures for inventory and periodic data purging, media degausing, and media recertification.

10. The Contractor shall provide for special studies, data comparisons, report preparation, etc., as may be requested by NUWC.

11. The Contractor shall be responsible for following appropriate security guidelines for classification, identification, marking, safeguarding, storing, packaging, and distributing of classified IT resources and data, as dictated by the subject matter. The Contractor shall maintain accurate records for accountability purposes. Specific protection for IT access, as well as administrative, operational, physical, and personnel controls are set forth in Chapter XXIII of this Specification, the current DoD Contract Security Classification Specification (DD Form 254) as appearing in Section J, Attachment (8), of this Contract, and in appropriate Applicable Documents cited in paragraph F.

12. The Contractor shall submit all NUWC-required technical and administrative reports, described in Chapter XXV of this Specification, as pertain to support for AUTEC's range data processing requirements.

## D. WORKLOAD FACTORS

1. As may be derived from information contained in paragraph C, and in Chapters II (1), IV (1), and VI (1), (2), and (3) of this Specification.

2. It is estimated that complete analysis of approximately 50 MK-48 Mods 4, 5, and 6 exercises (four torpedo firings each) per year will be required. Data analysis and preparation/promulgation of a requisite reports in Naval Message format will be completed within two days of test completion/receipt of shipboard data.

3. Services to receive, package, and distribute data products shall be available during hours of scheduled range operations. Extended support may occasionally be required under special circumstances.

## E. KEY PERSONNEL/PERSONNEL QUALIFICATIONS

1. Key Personnel: None.

2. Personnel Qualifications:

a. Data Processing Supervisor. To successfully execute the responsibilities and tasks described, the person assigned should, as a minimum:

1. Have a BS degree in Mathematics, Computer Science, Engineering, or other Physical Science and six years experience and progressive responsibility in:

(a) Real-time computer operations.

(b) Post-test data processing and data analysis operations.

2. Have one year of supervisory experience.

3. Possess good oral and written communications skills.

b. Data Analysts: To successfully execute the responsibilities and tasks described, personnel assigned should as a minimum:

1. Have a BS degree in Mathematics, Physics, Engineering, or other Physical Science and five years experience, or have 10 years direct experience, and progressive responsibility in real-time data analysis (evaluation of data validity and adequacy/determination of required editing) and post-test data processing (software selection and setup, analysis of output, and assembly of customer data packages) in a test environment with in-air and/or in-water tracking capabilities.

c. Data Controllers: To successfully execute the responsibilities and tasks described, personnel assigned should as a minimum have two years experience in real-time data collection utilizing Unix workstation environments.

## F. APPLICABLE DOCUMENTS

| | |
|---|---|
| DoDD 5200.28; | Security Requirements for Automated Information Systems |
| COMSUBLANT/COMSUBPACINST C 8510.1 (series); | Torpedo MK-48 Hit/Miss/Invalid Scoring Criteria and Quick-Look Reporting (U) |
| OCD-(05)-01-XX; | Data Controller |
| OCD-(05)-04-XX; | Identification of Data Items |
| OCD-(05)-05-XX; | Release of Range User Data Packages |
| OCD-(05)-07-XX; | Computer Services Instructions |
| OCD-(05)-14-XX; | Bounce Pinger Data Processing |
| OCD-(05)-22-XX; | ARGOS Video Taping Subsystem |
| OCD-(05)-24-XX; | Lightweight Torpedo Rapid Feedback System |
| OCD-(05)-25-XX; | AUTEC Range Data Transfers |

| | |
|---|---|
| OCD-(05)-26-XX; | NATO FORACS Test Reporting Integrated Program Post-test Processing |
| Other OCDs; | Relevant/Related OCDs as may be listed in Table XV-4 |

JA1-139
N61339-97-C-0001
P00092

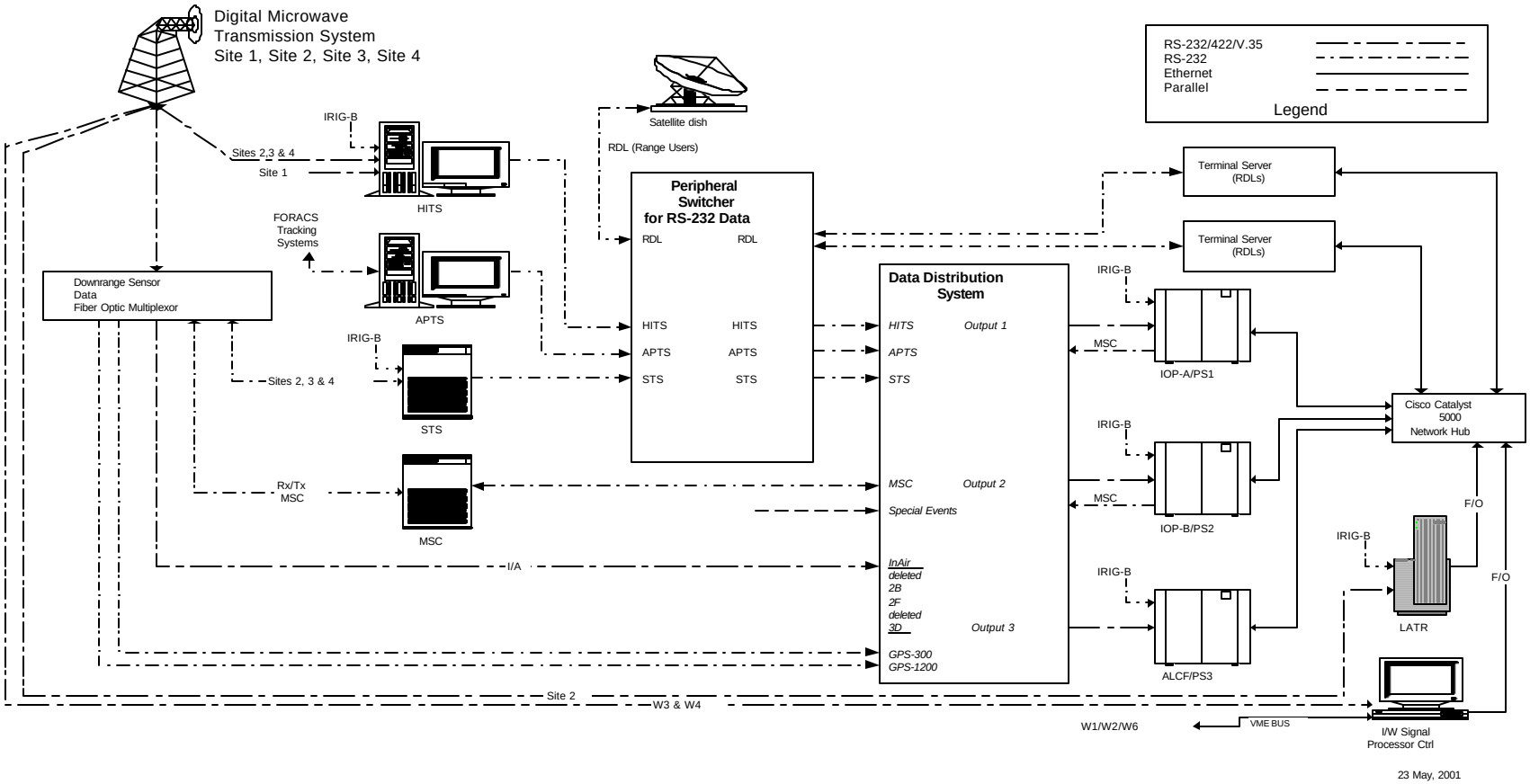


Figure V-1
ARGOS DATA DISTRIBUTION SYSTEM (DDS)

# VI. INFORMATION TECHNOLOGY

## 1. SOFTWARE

### A. GENERAL

Without Information Technology (IT) systems to operate its tracking range instrumentation and to collect and process test data, AUTEC could not fulfill its assigned mission. Other IT resources are needed to support the day-to-day technical and administrative functions and tasks required by the various chapters of this Specification. Efficient, well documented systems and applications software programs are critical to satisfying the test needs of AUTEC's customers and for the effective operation and management of the AUTEC program.

### B. DESCRIPTION

Software resources for AUTEC's IT systems vary widely in their designed purpose and method of implementation. AUTEC's IT software resources are classified in five categories: real-time software supporting on-range testing activities (see Table VI-1); pre- and post-test software supporting testing activities (see Table VI-2); M&O Contractor-maintained software supporting business/administrative activities (see Table VI-3); Government-maintained software supporting business/administrative activities (see Table VI-4); and commercial-off-the-shelf (COTS) PC software (see Table VI-5).

Software support requirements include the following: assessment of needs/requirements in conjunction with end-users; if appropriate, the formal definition of requirements and performance specifications; software development and maintenance on a variety of hardware platforms and networks (see Chapters VI(2) and VI(3), respectively, of this Specification); documentation development and maintenance supporting users and maintainers; on-call support for mission-critical operations; normal work-hour support for non-real-time troubleshooting and assistance; certification and change control procedures supporting effective configuration management; and software engineering studies supporting improvement efforts.

### C. CONTRACTOR RESPONSIBILITIES

1. The Contractor shall support AUTEC's IT software needs in accordance with the AUTEC Schedule of Operations, published Operations Directives, Workload Factors given in paragraph D, Applicable Documents cited in paragraph F, and other requirements stated below. Special requirements may be tasked by NUWC Work Order or Letter of Direction.

2. The general approach to accomplishing AUTEC's IT software needs is that routine, day-to-day tasks, be accomplished by the Contractor. The Contractor's staff should be cross utilized, to the maximum extent practicable, both within this specification chapter and other specification chapters. It is noted that the workload factors cited in Section D of this chapter are estimates only and should not be construed as any type of minimum/maximum staffing level. Arrangements for procured services to support requirements related to this area shall be made by the Contractor on a case-by-case basis, considering cost-effectiveness, schedule or other requirements as approved by NUWC.

3. The Contractor shall support AUTEC's IT requirements using only NUWC approved/certified software. Lists of approved applications and systems software are provided in Tables VI-1 through VI-5. These lists are considered to be representative. Actual inventory is as approved by NUWC.

4. The Contractor shall follow approved AUTEC operational procedures and guidelines for software procurement, accounting, configuration control, etc., as contained in applicable/relevant OCDs and APP 8-46G.

5. The Contractor shall provide an Information Systems Coordinator who shall be the single point-of-contact for NUWC, and other Contractor personnel, for resolution/solution of IT problems and issues. This person shall oversee and coordinate all technical and operational functions relating to required AUTEC project IT support including, but not limited to: IT software development and life-cycle efforts; and short- and long-term IT planning. The Information Systems Coordinator, assisted by others, shall be qualified to perform and/or oversee the following tasks:

a. IT software life-cycle support from task inception through full configuration management.

b. Conduct long-term planning, system analysis, and system design studies; prepare technical reports describing projected needs, problems, viable options, and recommended courses of action as appropriate.

c. Evaluate IT changes and improvements as

proposed by others. Prepare requisite reports and recommended courses of action as appropriate. Coordinate with/assist the Systems Engineering and Analysis (SE&A) Group as appropriate. See Chapter XVI of this Specification.

d. Troubleshoot, identify, analyze, and develop corrections for reported problems with all IT software.

e. Install, integrate, and check-out new/modified IT software/firmware on all IT systems.

f. - - - - - *deleted* - - - - -

g. Be the point-of-contact to field trouble calls pertaining to all IT software. Diagnose problems, offer informed advice, schedule on-site help, and track and maintain a record of reported problems and their resolutions.

h. Provide NUWC Work Order Support.

i. Provide technical interface with NUWC/other activities.

6. The Contractor shall provide an adequate staff of persons qualified to perform the following tasks:

a. Develop and maintain an electronic database of all AUTEC IT software. Access to the Software Library shall be available through LAN/WAN connections including, but not limited to, the Technical Library (see Chapter XV(4) of this Specification).

b. Provide technical support to Purchasing for procurement of IT software, including: specification writing; technical evaluation of proposals; cost review; technical qualification of sources; preparation of inspection

and acceptance procedures; and conduct of acceptance tests.

c. Study operational problems and recommend solutions including preparing or revising operating documents. Periodically review documentation for accuracy. Prepare training materials if necessary.

d. Investigate reliability, maintainability, and/or performance problems with existing software and provide design services to correct deficiencies.

e. Develop and maintain electronic technical documentation for all AUTEC IT software. This shall include functional descriptions, design specifications and operating instructions, and when appropriate, requirements and performance specifications. Requirements and performance specifications shall be provided prior to final project planning. All documentation shall be complete, accurate, and provided in a timely manner.

7. Except for that software maintained by the Government (see Table VI-4), the Contractor shall provide support for the maintenance, modification, documentation, and configuration control of all of AUTEC's software in accordance with the requirements of the AUTEC Software Configuration Management Plan. The Contractor shall assure that no illegal software (i.e. software for which there is no valid license on record) is resident/used on any Government-owned PCs or other computers which are in the custody of, or otherwise under the control of, the Contractor. Restoration of mission-critical real-time and post-test software resources shall be accomplished as soon as possible. Software modifications, except in emergency situations, must be approved by NUWC prior to implementation.

8. The Contractor shall provide support for software procurement, enhancement, and new software development as required/approved by NUWC in accordance with the requirements of the AUTEC Software Configuration Management Plan. Such support shall include: appropriate requirements assessment; IT environment and interface analyses; investigation of available COTS or Government-off-the-shelf (GOTS) software; algorithm development, etc.. The acquisition of acceptable COTS or GOTS software shall in most cases be preferable to in-house development.

For certain unique efforts such as combat system performance analysis, relevant software and algorithms will be furnished by NUWC for incorporation by the Contractor.

9. The Contractor shall provide knowledgeable personnel to interface with Range Users, Test Planning, and others as may be necessary to assist in the definition of new or modified software needed to meet data requirements stated in relevant OCDs. These personnel shall attend pre and post-test briefings as required (see also Chapter IV(1) of this Specification).

10. The Contractor shall provide support for Personal Computer (PC) software selection, control, distribution, installation, interface, upgrade, and trouble-shooting.

11. The Contractor shall implement new/enhanced software only after performance of thorough acceptance testing as described in applicable OCDs and then only when approved by NUWC.

12. The Contractor shall adhere to all NUWC-directed safeguards against software virus attacks on AUTEC's Information Technology systems.

13. The Contractor shall provide support for special studies, data comparisons, evaluations of algorithms, and report preparation as may be required by NUWC.

14. The Contractor shall be responsible for following appropriate security guidelines for classification, identification, marking, and safeguarding of classified IT resources as dictated by the subject matter. The Contractor shall maintain accurate records for accountability purposes. Specific protection for IT access, as well as administrative, operational, physical, and personnel controls are set forth in Chapter XXIII of this Specification, the current DoD Contract Security Classification Specification (DD Form 254) as appearing in Section J, Attachment (8), of this Contract, and in appropriate Applicable Documents cited in paragraph F.

15. The Contractor shall submit all NUWC-required technical and administrative reports, described in Chapter XXV of this Specification, as pertain to software support for AUTEC's Information Technology systems.

## D. WORKLOAD FACTORS

1. ARGOS-knowledgeable Software Systems Engineering support is required to be on-call to resolve real-time systems software problems whenever the real-time IT systems are supporting test operations (see Chapter IV(1) of this Specification).

Restoration of real-time IT software operation shall be accomplished within three hours.

2. Software development/maintenance/documentation/installation tasks are estimated to require twelve work-years of effort and may be accomplished where appropriate IT resources are available, either on Andros Island or at West Palm Beach, FL. Support will be provided during normal working hours, except for holidays and weekends, unless otherwise required by NUWC.

3. Support is required for correction of all IT software problems during normal work hours, and on-call for the real-time and post-test system(s) during periods of scheduled operations outside of normal work hours.

4. Fielding of trouble calls is required during normal work hours. All calls shall be acknowledged within one hour.

## E. KEY PERSONNEL/PERSONNEL QUALIFICATIONS

1. Key Personnel:

a. Information Systems Coordinator

1. Mimimum Number Required: 1

2. Education: BS or MS Degree in Computer Science or Computer Engineering, with 10 years direct experience and increasing responsibilities as described below.

3. Experience: Have direct experience and increasing responsibility in the design, implementation, and life-cycle support of Information Technology hardware and software systems, including demonstrated responsibility for establishing and meeting production schedules and deadlines.

4. Other: Good oral and written communication skills are required.

2. Personnel Qualifications:

a. Software Systems Engineer(s) To successfully execute the responsibilities and tasks described, the person(s) assigned should as a minimum:

1. Have a BS degree in Computer Engineering or Computer Science with 5 years of software development experience.

2. For personnel assigned to support test operations, have two years direct experience with the "C" language, two years experience programming in the UNIX Operating System, and direct experience with real-time graphic display systems.

3. For personnel assigned to support non-test operations, have two years direct experience with administrative information systems.

b. Software Applications Programmer(s) To successfully execute the responsibilities and tasks described, the person(s) assigned should as a minimum have a BS in Computer Science.

## F. APPLICABLE DOCUMENTS

| | |
|---|---|
| DoDD 5200.28 | Security Requirements for Automated Information Systems |
| AUTEC Reference Document | AUTEC Software Configuration Management Plan |
| AUTEC Reference Document | AUTEC Information Systems Management Overview |
| OCD-(06.1)-01-XX; | Post-test Software Certification, Control, and Modification |

*- - - - - deleted - - - - -*

| | |
|---|---|
| OCD-(06.1)-13-XX; | ARGOS Control, Modification, and Certification |
| OCD-(06.1)-23-XX; | Data Processing Software Backup |

- - - - - *deleted* - - - - -

| | |
|---|---|
| OCD-(06.1)-35-XX; | Control of Systems Constants in AUTEC Computers |
| Other OCDs; | Relevant/Related OCDs as may be listed in Table XV-4 |
| APP 8-46G; | Computer Systems Acquisition, Maintenance, and Control |

# CONTRACTOR-MAINTAINED REAL-TIME SOFTWARE

## ARGOS SOFTWARE

The ARGOS Real-Time Software consists of several functional modules residing on either the Host Computer(s) or one or more of the several workstations which are situated on the classified Local/Wide Area Network (LAN/WAN). Host-based modules deal primarily with tracking solutions, data filtering/archiving and network data transmission. Workstation modules deal with all manipulation of the tracking data, primarily the graphic user interface (GUI); many of the modules can be directly correlated to user "commands." The following are representative of the most significant processes of ARGOS; some less significant processes have been omitted. The various functional modules are written to conform to ANSI standards for the "C" programming language.

| Host Modules | Function | Lines of Code |
|---|---|---|
| ARCHIVE | Data Archiving Processor | 3752 |
| AUXTRK | Time Correlation Processor | 4328 |
| CPA | Closest Point of Approach (CPA) Processor | 2535 |
| DIAGPROC | Diagnostics Processor | 1513 |
| DIPROC | Data Input (In-Water and Radar) Processor | 3379 |
| FILTER | Data Filter and Edit Processor | 6969 |
| HITS | Hyperbolic In-Air Tracking System Processor 468 | |
| HPLOT | Hard-copy Plot Processor | 8719 |
| INAIR | Radar Track Processor | 2474 |
| INFOMAN | ARGOS Information Manager | 538 |
| INWATER | In-Water Track Processor | 15798 |
| IOP | I/O Processor Interface | |
| 3793 | | |
| MSGPROC | Message Processor | 2329 |
| MONITOR | Displays raw data as received | 6597 |
| NETOUT | LAN Communications Processor | 4217 |
| PLAYBACK | Data Replay Processor | 421 |
| RADFIT | Least-Squares Radar Track Processor | 3000 |
| RDFPROC | Provides Data to Playback Processor | 1490 |
| RNGCON | Loads Range Constants | 2162 |
| STS | Sonobuoy Tracking System Processor | 1812 |

Table VI-1

# CONTRACTOR-MAINTAINED REAL-TIME SOFTWARE

| Workstation Modules | Function | Lines of Code |
|---|---|---|
| AMP | MK 30 Am/Hr Calc Routine | 1372 |
| ANNOTATE | Annotation Task Buffer for VPLOT | 5555 |
| ARCHIVE | Phase 3 Data Archive Task | 2876 |
| ARCHIVE READ | Reads and formats Data Listings | 3045 |
| AUDIO | Records Digitized Audio | 3413 |
| BCAST | Workstation Set for Network Broadcast | 2474 |
| CALC | Generate Data Parameter from Equation | 3603 |
| CPLOT | Hard-Copy Plot of Calculated Parameters | 10541 |
| DEMO | Canned ARGOS Demonstration | 24165 |
| DIAG | Generates Diagnostic Information | 3693 |
| DUMP | File System Dump | 2020 |
| EMBED | Abbreviated Command Structure | 2581 |
| EVENT | Logs Test Event Occurrences | 3532 |
| FOLSUM | Radar digitizer to ARGOS Interface | 6968 |
| FONT | Alphanumeric Character Size Control | 59 |
| GEOMETRY | Store/Draw Pre-Planned Maneuvers | 3094 |
| GUI | Point-and-Click GUI | 17603 |
| HELP | Detailed ARGOS Instructions | 80015 |
| ID | Generates Target ID Lists | 22550 |
| INWAT | Raw In-Water Tracking Data Displays | 11041 |
| MSG | Message Display | 3129 |
| NUMS | Tailorable Alphanumeric Data Display | 13726 |
| OVERLAY | Draw Vector Sets (such as Coastline) | 1290 |
| PIX | Graphic Output | 1640 |
| PLOT | Redefines VPLOT Parameters | 5948 |
| PRINT | Print Tools | 3402 |
| RADCAL | Radar Calibration Tool | 5539 |
| RADAR | Raw In-Air Tracking Data Display | 4156 |
| RAO | Remote Data Transmission | 3909 |
| RANGE | X-Y Geographic Data Display | 22485 |
| RDARCH | Raw Data Archive | 1180 |
| REPLAY | Process Archived Data in non-Realtime | 3556 |
| SCAN | Folsum Screen Routine | 488 |
| SCRIPT | Sequence of Commands/Input | 9516 |
| SERIAL IN | Receive Data through Serial Port | 2113 |
| SERIAL OUT | Transmit Data through Serial Port | 1651 |

Table VI-1 (cont.)

CONTRACTOR-MAINTAINED
REAL-TIME SOFTWARE

| Workstation Modules | Function | Lines of Code |
|---|---|---|
| SAFETY | Display Tool using Safety Regulations | 3149 |
| SIM46 | MK46 Torpedo Simulator | 22939 |
| SIM48 | Mk-48 Torpedo Simulator | 33000 |
| SLEWS | Pre-Test In-Air Checkout | 3299 |
| SPCMD | Pre-Test In-Water Checkout | 4258 |
| STRING | Command Shortcut | 4553 |
| SWITCH | Workstation-to-Host Communication | 2520 |
| SXD | Remote Command Execution Server | 1613 |
| TPLOT | Axis-based Time-Correlated Data Plot | 10446 |
| TRACK | Track Data Generation | 3919 |
| TTY | Modem Interface Routines | 2137 |
| UI | User Interface Utilities | 21276 |
| VATT | Vehicle Attributes | 1212 |
| VIDEO | Video Mode Formatter | 4534 |
| VPLOT | Hard-Copy Plot Generator | 19733 |
| WTH | Workstation-to-Host | 14283 |
| XTERM | Terminal Emulator for "X" | 52481 |
| YACC | Enhanced Error Handling Routines | 1090 |

External Tracking Systems Software

There are AUTEC instrumentation/tracking systems whose real-time tracking functions take place on computers separate from ARGOS. These computers receive raw instrumentation data and process it in some fashion. Except for the Portable Tracking System (PTS), they then supply it to ARGOS' Data Distribution System (DDS), which in turn supplies it to the Host Computer.

| Tracking System | Platform/Language | Lines of Code |
|---|---|---|
| Hyperbolic in-Air Tracking System (HITS) | IBM Personal Computer/ Basic | 3000 |
| Sonobuoy Tracking System (STS) | HP Model 330/ Fortran and C | 85628 |

Table VI-1 (cont.)

CONTRACTOR-MAINTAINED
REAL-TIME SOFTWARE

| Tracking System | Platform/Language | Lines of Code |
|---|---|---|
| Large Area Tracking Range (LATR) | HP 9000 Model 700/ Workstations | (software maintained by 3rd party) |
| Portable Tracking System (PTS) Naval Tracking and Display Software (NTADS) | Sun/ Fortran and C | 200000 |

Table VI-1 (cont.)

# CONTRACTOR-MAINTAINED PRE- AND POST-TEST SOFTWARE

| Program Name | Program Description | Lines of Code |
|---|---|---|
| "C" SOFTWARE ON SGI WORKSTATIONS: | | |
| Note: This list does not include numerous small utilities that manipulate real-time and post-test-generated files. | | |
| 9TTU | 9-Track Tape Utility for the creation and manipulation of ASCII files on 9-track tapes. | 12176 |
| GAPP | General Purpose Plot Package; a PV-Wave application. | 14907 |
| IMPACT | An interactive program for Calculating a Single In-Water Position such as Water Entry Impact. | 9000 |
| IWSIM | An off-line (non-real-time) version of the ARGOS In-Water Processor; used for data production and data analysis/troubleshooting. | 6972 |
| LCTOC | Generates a listing of the Times of Coincidence for a calendar year. | 1488 |
| MK46 SIMULATOR | Given track of shooter and target(s), simulates MK46 Torpedo. | 22939 |
| RDAS | Range Data Analysis System-Edits, smooths, time correlates and performs a variety of data production services. The program is comprised of 25 individual modules selected via an interactive menu. | 33184 |
| RDFU | Raw Data File Utility. A modularized program to manipulate and output raw data for all tracking sensor systems. (A raw data counterpart to RDAS). | 5984 |
| SVP | Computes Sound Velocity Profile from input temperature vs. depth data; optionally also | 5376 |

Table VI-2 (cont.)

generates Ray Trace plots.

CONTRACTOR-MAINTAINED
PRE- AND POST-TEST SOFTWARE

| Program Name | Program Description | Lines of Code |
|---|---|---|
| FORTRAN SOFTWARE ON VAX 8350 and/or MicroVax II COMPUTERs: (number of lines is estimate excluding comments) | | |
| ACOUSTICS Package | Sound Measurement Analysis Tools. | 12563 |
| BBNPROBE | (Bolt, Beranek & Newman) commercial version of analysis tools utilized with MK48 ADCAP weapons, formerly known as DATAPROBE (only executable files are resident). | - |
| BQQ6 | Decodes AN/BQQ-6 Sonar data recorded on-board TRIDENT (class) submarines. | 1800 |
| CANFORACS | Decodes sensor data recorded on-board Canadian submarines. | 2800 |
| DCB7T09 | Converts US and UK shipboard tapes from 7- to 9-track. | 1710 |
| FACT | An Acoustic Ray Model for the Computation of Underwater Sound Transmission Loss. | 51750 |
| FCS_117 | Decodes US sonar system tapes. | 3225 |
| FDRS | Fleet Data Reduction System - decodes and interprets internal MK48 ADCAP data (only executable files are resident). | - |
| GENERIC SONAR MODEL | Navy Standard Underwater Analysis Tool. | 56888 |
| MK48/ADCAP FIRING ANALYSIS Package | Software package (100+) used to provide placement analysis of submarine weapon system firings. | 357447 |
| MK48 SIMULATOR | Given track of shooter and target(s), simulates MK48 Torpedo. | 28974 |

Table VI-2 (cont.)

| | | |
|---|---|---|
| TIES | Torpedo Instrumentation Exercise Subsystem<br>Decodes and interprets internal MK48 Torpedo data. | 63190 |

## CONTRACTOR-MAINTAINED PRE- AND POST-TEST SOFTWARE

| Program Name | Program Description | Lines of Code |
|---|---|---|
| UK Package | Decoding, Reformatting, Listing, and Creation of GAPP plot files of British Shipboard Data Tapes for the Various Versions of their Fire Control Systems (FCS). The primary relevant programs are: | |
| | AIO | 15210 |
| | AIOTAP | 5910 |
| | SPEARFISH | 37920 |
| | SPEARTAP | 5955 |
| VIDEO | Software package (20+) used to generate tailored videotape reconstruction of on-range exercises. | 50003 |
| SOFTWARE ON PC SYSTEMS: | | |
| BEACON | A Quattro Pro application that keeps track of the radar beacon inventory. | |
| BSY2 | Decodes AN/BSY-2 Sonar data from User-supplied Media. | 261 |
| COCO | Coordinate Conversion. | 3000 |
| NAVMESS | Interface for Input of Data for Creation of MK46 Rapid Feedback Firing Report. | 529 |
| PCARGOS | ARGOS Look-alike used for Data Playback or for Real-time Display with PARGOS System. | 6500 |
| XBT | Interface for Input of Raw Expendable Bathythermographic (XBT) Data. | 1910 |

ACOUSTIC TEST SOFTWARE:

The following list of software supports Acoustic Testing activities described in Chapter II(2) of this Specification. This software resides on a variety of Personal Computer (PC) platforms. All programs are written in different versions of the Basic programming language, some with Visual Basic.

Table VI-2 (cont.)

CONTRACTOR-MAINTAINED
PRE- AND POST-TEST SOFTWARE

| Program Name | Program Description | Lines of Code |
|---|---|---|
| BUOYANT TEST VEHICLE (BTV) IDAHO | Real-time Acquisition and Post-test Processing for Popups at Lake Pend O'reille, Idaho. | 9076 |
| BTV II | Real-time Acquisition and Post-test Processing for Popups off the Ocean Haul Down Facility (OHDF). | 5569 |
| BTV INTERNAL | Post-test Processing for Data Recorded with Microphones and Accelerometers inside BTV. | 3898 |
| DEPLOYABLE NOISE MEASUREMENT (DNM) | Real-time Acquisition and Post-test Processing for Torpedo or Mobile Target Signature Measurements. | 15932 |
| GH. BAS | Produces Calibration Correction Files Compatible with HP3562A Spectrum Analyzer. | 186 |
| GENERIC NOISE MEASUREMENT (GNM) | Real-time Acquisition and Post-test Processing for Various Noise Sources and Array Configurations. | 13221 |
| LACALW | Calibration Software for DNM Line Array. | 966 |
| LIST TRIGGER | Starts Spectrum Analyzers at Designated Times. | 136 |
| OMNICAL | Calibration Software for DNM Omnidirectional Hydrophones. | 1392 |
| PORTABLE MEASUREMENT SYSTEM (PMS) | Reduction and Plotting for HP3560 Spectrum Analyzer used for Data acquired with PMS. | 420 |
| PAMSCAL | Omnidirectional Hydrophone Calibration with HP3562A when using PMS. | 702 |

Table VI-2 (cont.)

## CONTRACTOR-MAINTAINED PRE- AND POST-TEST SOFTWARE

| Program Name | Program Description | Lines of Code |
|---|---|---|
| SA_CONTROL | Setup and Control Software for Scientific Atlanta LOFARgram System. | 12070 |
| SOFTPLOT | Allows Quick, Versatile Plots from HP3562A or HP35670 Analyzer Displays. | 242 |
| TONETRACK | Processes Multiple FM Pulses Captured with HP 3562A Analyzer. | 894 |
| WEAPON NOISE MEASUREMENT (WNM) QUICKLOOK | "Quick-look" Software for Torpedo Signature Data Collected with WNM Array. | 559148 |

## FORACS SOFTWARE

Software supporting Fleet Operational Readiness and Accuracy Checksite (FORACS) events at AUTEC is resident on the Vax 8350 and Microvax II computers and on IBM-compatible Personal Computers (PCs). Some FORACS software is maintained by NCCOSC, the FORACS program TDA. The VAX and PC software listed below shall be maintained by the Contractor:

### VAX 8350/MICROVAX II

| Program Name | Program Description | Language | Lines of Code |
|---|---|---|---|
| SELVAXPCQ5 | Extracts BQQ5 or BSY-1 data from decoded shipboard tapes and writes sensor files for use by PC software | Fortran | 444 |
| Q6 FOR PC | Extracts BQQ6 data from decoded shipboard tapes and writes sensor files for use by PC software | Fortran | 440 |

Table VI-2 (cont.)

CONTRACTOR-MAINTAINED
PRE- AND POST-TEST SOFWARE

| | | | |
|---|---|---|---|
| Q5E FOR PC | Extracts BQQ5E data from decoded shipboard tapes and writes sensor files for use by PC software | Fortran | 440 |
| CAN | Extracts sensor data from decoded Canadian DGS floopy disks and writes sensor files for use by PC software | Fortran | 450 |

IBM-COMPATIBLE PERSONAL COMPUTER

| Program Name | Program Description | Language | Lines of Code |
|---|---|---|---|
| FORSONT | Calculates Range and Bearing errors | Fortran | 4058 |
| FORPLOT | Generates error plots | Fortran | 2261 |
| FORSTAT | Generates statistics | Fortran | 1129 |
| HPCARDS | Converts manually punched sensor data to proper format for data reduction. Also converts mark number to times. | Fortran | 560 |
| IDATS | System Various Software Processes Supporting a Portable Network of PCs | C | 23003 |
| MARKXY | Extracts ship position information from FORACS Range real-time file | C | 2929 |

Table VI-2 (cont.)

CONTRACTOR-MAINTAINED
PRE- AND POST-TEST SOFTWARE

| Program Name | Program Description | Language | Lines of Code |
|---|---|---|---|
| RDASXT | Extracts ship and target information from RDAS (see above SGI software) floppies based on time when sonar cuts were made. | Fortran | 124 |

Table VI-2 (cont.)

## CONTRACTOR-MAINTAINED ADMINISTRATIVE DATA BASES AND SOFTWARE SYSTEMS

Most software in general use is resident on a Digital Equipment Corporation (DEC) 4705A Computer on AUTEC's unclassified Local Area Network (LAN). Older software is written in the Cobol programming language. Newer software is written in the fourth generation language Powerhouse (a Cognos product), which uses interactive screen interfaces with the user. Some of the newest software is being developed for personal computers in Visual Basic. The use of client-server technology is also given full consideration for new applications.

### COBOL APPLICATIONS

| Program Name | Program Description | Specification Chapter (Subchapter) | Lines of Code/Screens |
|---|---|---|---|
| AUTEC MAINTENANCE SYSTEM | Provides scheduling of preventative maintenance for range instrumentation equipment | XV (4) | 7182/- |
| GOVERNMENT REQUISITIONS | Processing, tracking, cost accounting and forecasting of AUTEC requisitions within the Government/ Navy Supply Systems. Follows MILSTRIP and NAVSUP Pub 409 formats/coding. | XXI (1) | 22816/3 |
| PURCHASE ORDER OBLIGATION REPORTING STATUS | Financial tracking of purchase requisitions and orders (similar but different from POORS software listed in Table VI-4) | XXI (1) | 19708/34 |
| PURCHSTAT | Provides on-line status of purchase requisitions after their receipt by Purchasing department. | XXI (1) | 445/- |
| REPAIR REPORT CARD | Tracks corrective maintenance actions by equipment, time, failed item | XV (4) | 1565/- |

Table VI-3

## CONTRACTOR-MAINTAINED ADMINISTRATIVE DATA BASES AND SOFTWARE SYSTEMS

| Program Name | Program Description | Specification Chapter (Subchapter) | Lines of Code/Screens |
|---|---|---|---|
| SEQUENCE TRACKING | M&O Contract/Personnel Mapping | XXV | 529/4 |
| WORK ORDER DISTRIBUTION | Tracks distribution of costs by Specification Chapter within Work Order. | All | 9404/- |
| WORK ORDER | Master Index of all AUTEC Work Order numbers. | I | 1287/2 |

## POWERHOUSE/COBOL APPLICATIONS

| Program Name | Program Description | Specification Chapter (Subchapter) | Lines of Code/Screens |
|---|---|---|---|
| CAL LAB | Tracks last and next calibration dates/ recall information for all test equipment. | XIII (1) | 3370/2 |
| RRUR/ARSO/ PLATFORM | Tracks and provides statistical data on all resources utilized to support each test | IV (1) | 2610/91 |

Table VI-3 (cont.)

## CONTRACTOR-MAINTAINED ADMINISTRATIVE DATA BASES AND SOFTWARE SYSTEMS

| Program Name | Program Description | Specification Chapter (Subchapter) | Lines of Code/Screens |
|---|---|---|---|
| TEST OPERATIONS SYSTEM: AIR OPS/HOST VISIT/ ANDROS HOUSING/ SECURITY | Generates transport aircraft manifests, tracks passenger usage. Also tracks transient housing assignments, security clearance data, and visiting dignitary schedules. | IV (2)<br>XIX (1)<br>XXI (2)<br>XXIII | 1131/164 |

## POWERHOUSE APPLICATIONS

| Program Name | Program Description | Specification Chapter (Subchapter) | Lines of Code/Screens |
|---|---|---|---|
| ANTENNA DATABASE | Provides on-line technical data about all AUTEC antennas | VII (1) | -/14 |
| ACTIVE DIRECT TURNOVERS | Current status of one-time purchase supply items | XXI (1) | -/1 |
| DAILY BRIEF | Provides on-line tool for entering status and statistical data for all test and base support functions | IV (1) | -/59 |
| DRAWINGS | Maintains configuration control of current project schematics | XV (4) | -/8 |
| HURRICANE EVACUATION | Tracks personnel actually on Andros Island, and, in the event of a hurricane evacuation, manifesting, hotel location, per diem and other pertinent data. | II (4) | -/23 |
| ISSUES FROM INVENTORY | Tracks items issued by specific Work Order Number. | XXI (1) | -/7 |

Table VI-3 (cont.)

CONTRACTOR-MAINTAINED ADMINISTRATIVE DATA BASES
AND SOFTWARE SYSTEMS

| Program Name | Program Description | Specification Chapter (Subchapter) | Lines of Code/Screens |
|---|---|---|---|
| NETWORK INTERFACE UNIT ASSIGNMENT | Tracks network addresses for all computer hardware | VI (3) | -/4 |
| OVERTIME TRACKING/ BUDGETING | Tracks overtime by Work Order Number | XXV | -/2 |
| PERSONAL COMPUTER SOFTWARE TRACKING | Tracks all commercial software by end user | VI (1) | -/17 |
| PROPERTY CONTROL | Tracks all non-expendable property | XXI (1) | -/19 |
| RANGE SCHEDULING | Centralized source for time and resource management in support of Range Users | IV (1) | -/36 |
| RANGE UTILIZATION BUDGET | Resource Management Tool used in conjunction with Range Scheduling software. | IV (1) | -/3 |
| TELEPHONE | Billing systems for Andros-based long-distance telephone calls. | XXV | -/25 |
| TRAINING/ EDUCATION TRACKING | Tracks all professional and academic training for Contractor personnel | XV (3) | -/27 |
| WAVE/WEATHER | Interfaces to on-island computer that collects weather data at the Ocean Haul Down Facility. Displays ten-minute old data in addition to historical. | VI (1) | -/3 |
| WORK ORDER | On-line entry of monthly status | All | -/8 STATUS information |

Table VI-3 (cont.)

Table VI-3 (cont.)

CONTRACTOR-MAINTAINED ADMINISTRATIVE DATA BASES AND SOFTWARE SYSTEMS

MISCELLANEOUS PC SOFTWARE SYSTEMS

| Program Name | Program Description | Specification Chapter (Subchapter) | Software Tool |
|---|---|---|---|
| AIRCRAFT MAINTENANCE | Tracks flight hours, landings, cycles, and date driven inspections | XIX (2) | dBase IV |
| BEACON | Tracks radar beacon inventory | V | Quattro Pro |
| DAMES | DAASC (Defense Automatic Addressing System Center) Automated Message Exchange System. File transfer software used to transmit MILSTRIP DATA to DAAS; and to receive MILSTRIP status messages from DAAS | XXI (1) | GOTS |
| DOCUMENT CONTROL | Classified Document Tracking and access rosters for restricted areas | XXIII | dBase IV |
| FILENEGS | Photographic Negative Log | XV (1) | Clipper |
| FOODTRAK | Manages food inventory for commissary | XXI (4) | COTS |
| MARINE MAINTENANCE | Tracks maintenance requirements and history of AUTEC's vessels | XVIII (2) | dBase IV |
| MK30 DAILY OPERATIONS | A suite of 20 plus programs that perform a myriad of daily tasks apart from the function of the NAVSEA program requirements | VIII | dBaseIV |
| PHOTOLOG | Audio-Visual Work Order Log | XV (1) | DBFast |
| RADIATION EXPOSURE REPORT | Formats report for dosimeter readings | XXV (5) | GOTS |

Table VI-3 (cont.)

Table VI-3 (cont.)

## CONTRACTOR-MAINTAINED ADMINISTRATIVE DATA BASES AND SOFTWARE SYSTEMS

| Program Name | Program Description | Specification Chapter (Subchapter) | Software Tool |
|---|---|---|---|
| RADIATION HEALTH ASSISTANT | For operation of radiation health Program | XXV (5) | GOTS |
| SAFETY SHOES | Tracks distribution of Safety Shoes | XXII (1) | dBase IV |
| SHOP FOREMAN | Diagnosis of vehicular problems | XX (3) | COTS |
| STAR INTEGRATO | Runs gas chromographs | XX (2) | COTS |
| VACTRAC | Automatic vaccination tracking for hepatitus-B vaccine | XXI (5) | COTS |
| WATER INVOICES | Calculates langiler and rizner index | XX (2) | COTS |
| WAVE-AD | Processes anemometer readings for wind data and wave height prediction. Interfaces with WAVE/ WEATHER. | VI (1) | COTS |
| XBT/SVP DATABASE | Historical collection of AUTEC environmental data available to users through the Internet | V | Visual Basic |

## CLIENT-SERVER SYSTEMS

Client-server technology applications at AUTEC require not only a healthy local area network, but also significant interface effort with older data systems. All client machines are IBM-compatible personal computers.

Table VI-3 (cont.)

CONTRACTOR-MAINTAINED ADMINISTRATIVE DATA BASES
AND SOFTWARE SYSTEMS

| Program Name | Program Description | Specification Chapter (Subchapter) | Server |
|---|---|---|---|
| | *- - - - - deleted - - - - -* | | |
| PC TRANSPORT | Transportation Equipment Maintenance and Fleet Management. Government product. | XX(3) | - |
| REALITY | Full-blown Purchasing System. Interfaces with several above mentioned systems. Permits desk-top requisitioning. Commercial product. | XXI (1) | DEC Vax 4705A |
| SQL SERVER | Microsoft SQL Server back-end relational database management system. Client-server development for PC front-ends. Commercial product. | VI (3) | Windows NT Network File Server |
| SMS SERVER | Microsoft Systems Management Server for managing networked PCs. Includes software installation, trouble-shooting and inventory. Commercial product. | VI (3) | Windows NT Network File Server |

# GOVERNMENT-MAINTAINED ADMINISTRATIVE DATA BASES AND SOFTWARE SYSTEMS

Throughout the various chapters of the Specification, requirements are stated wherein the Contractor must collect data, keep records, submit various reports and be prepared to respond promptly to any special requests for data/reports. Many of these requirements are facilitated by software programs, running on a VAX cluster located at NUWC Division Newport, developed as part of AUTEC's Management Information System. This software is to be used by the Contractor but maintained by NUWC.

| Program Name | Program Description | Specification Chapter (Subchapter) | Lines of Code |
|---|---|---|---|
| ANNUAL INSPECTION SUMMARY | Tracks data for facility deficiencies from scheduled inspections of all Class II real property. | XX (1) | 1000 |
| ANNUAL WORK PLAN | Provides a management tool for tracking projected and actual Public Works labor hours based upon labor requirements for 5 year planning of minor construction projects. | XX (4) | 12000 |
| BENCH STOCK TRACKING | Provides a baseline bench stock catalog. | XXI (1) | 5000 |
| CLASS II REAL PROPERTY | Maintains NAVFAC-required data on all Class II real property (buildings, structures, and utilities). | XX (4) | 3000 |
| FACILITIES AND TRAILERS PREVENTATIVE MAINTENANCE | Provides a means for the automatic scheduling of preventive maintenance for facilities,trailers and installed equipment. | XX (1) | 2000 |
| FACILITY PLANNING | Provides a management tool for planning projects related to the maintenance and repair of Class II real property, the construction of new facilities, and the installation of built-in equipment to meet new RDT&E requirements. | XX (4) | 25000 |

Table VI-4

Table VI-4

GOVERNMENT-MAINTAINED ADMINISTRATIVE DATA BASES AND SOFTWARE SYSTEMS

| Program Name | Program Description | Specification Chapter (Subchapter) | Lines of Code |
|---|---|---|---|
| MAJOR APPLIANCE TRACKING | Tracks the inventory and location of major (household) appliances. | XX (1) | 2000 |
| PLATFORMS | Tracks the usage of Fleet platforms conducting/supporting test operations. | IV (1) | 5000 |
| PURCHASE ORDER OBLIGATION REPORTING | Provides for on-line access to outstanding and completed requisitions. | XXI (1) | 6000 |
| SUPPLY CATALOG | Provides on-line access to AUTEC's catalog. | XXI (1) | 2000 |
| SUPPLY/ INVENTORY MANAGEMENT SYSTEM | Provides full inventory management for all Andros and West Palm Beach warehouses. | XXI (1) | 75000 |
| TEST STATISTICS | Provides an historical database of all Work Order data (both Test and Non-Test related). | All | 16000 |
| TRAILER TRACKING | Tracks house trailers and other trailers used for office space, etc., on Andros. | XXI (1) | 2000 |
| WEAPON/ TARGET FIRINGS | Provides an historical database of all target/exercise weapon/test vehicle launch/recovery events. | IV (1) | 8000 |
| WORK CONTROL | Tracks (public works) service calls and the work performed to correct these deficiencies. | XX (1) | 16000 |

Table VI-4 (cont.)

Table VI-5

# COMMERCIAL OFF-THE-SHELF SOFTWARE

The following list is representative of Commercial Off-The-Shelf (COTS) IBM-compatible Personal Computer (PC) software products in use at AUTEC (there is a very small number of Apple computers). For brevity reasons, this list contains only the COTS product names. The AUTEC Information Systems Users' Group establishes standards (for pricing and commonality purposes) for products like word processors or spreadsheets but multiple like-products do exist at AUTEC. COTS software that has been designated as standards are indicated with asterisks (*). Software for use with Microsoft Windows is indicated with "/Windows".

Access
Accurender/Windows
Accuscan
Administrator's Manual Chief Advantage for Windows
Adobe Illustrator
Adobe Streamline
Advance Math for Mathcad
Advance Math for Mathcad
AM Organizer/Windows
Ansi C
Antivirus
Approach/Windows
Arc+Plus
Atalk III
Autocad
Autocad/Windows
Automanager Workflow/Win
Automenu
Autoscript
Autosketch
Axum
Backup
Break-Out-Box
Business 1
C Compiler
C++ Compiler
C++ & Appl Frwks
C++ & Appl Frwks/Win
C/C++ Development Kit/Win
Cadplus Autoplan
Cadplus Total AE/Windows
Cadplus Tutorial
Calendar/Windows
Calendar Creator/Windows
Canvas
Carbon Copy Plus
Clearface
Clipper
Commissary Mgmt
Conversions Plus
Corel Prof Photo Sampler
*CorelDraw
Correct Grammar
Cricket Graph
Crosstalk/Windows
Crystal Reports Pro
Data Widgets
Dbase IV
Dbase IV/Windows
Design Center
Dbase IV Developer's
Design Studio
*DOS
Drag & View
Ductsize
Ecco Professional
Edsa Comm. Super
EM4105 Term. Emulator
Excel
Express Publ/Win
EZ Plot
Facade/Windows
FAR/Windows
FAR/DFAR
Fastback Plus
Fastback/Windows
Filemaker Pro
First Graphics
Food Trac
Form Tool
Formtool/Windows
Fortran
Foxbase +
Foxpro
Freelance/Windows
Fuzicalc
Freelance Plus
Generic CAD
Graftool
Graftool Mathcad
Grammatick IV
Grapher/Windows
*Harvard Graphics
*Harvard Graphics/Windows
Hijaack/Windows
HP Scanning Gallery
HVAC Tools
Inpac
Instant Artist
Instant Recall
Kermit
Labels Unlimited
Labview
LabWindows
Lanwatch
Laplink Pro
Lotus 123
Lotus 123/Windows

COMMERCIAL OFF-THE-SHELF SOFTWARE

Lotus Freelance
Lotus Mail
Lotus Smart Suite
Lubalin Graph
MacDraw II
MacDraw Pro
Mace
Machine Design Toolkit
MacLink/PC
MacX
Mark & Wipe Board
Magic/Win
Mathcad
Mathcad/Windows
Mathcad Civil Eng. I
Mathcad Civil Eng. II Power Edit
Mathcad Elect. Eng. I
Mathcad Mech Eng I Procomm Plus
Mathcard Mech Eng II
Matlab
Matlab/Windows
Micrographics Designer
*Microsoft Mail
Microsoft Office
*Microsoft Project
Microsoft Word
Mini Cad +5
Mistral
Norton Antivirus
Norton Desktop/Win Quicken
Norton Utilities
Norton Utilities/Windows
Norton Utilities/Mac
Numerical Methds Mathcad
Officewriter
Omnipage
On Target
Optima
OS/2
Packrat/Windows
Pagemaker
Pathminder
PC DOS
PC Remote
PC Tools
PC File
PC Fullback
PC Lint for C/C++
PC/TCP
PC/TCP On Net
*Perfect Office
Persuasion
PFS Professional Write
PFS First Choice
Phonenet Liaison
Photoshop/Mac
Tango PCB
PowerPoint/Windows
Textbridge OCR/Win
Procomm Plus/Windows
Project Scheduler
PS Deluxe Companion/Win
Psychart
Pub Desktop/Windows
PV-Wave
Pyro
QA Plus/Windows
*QuattroPro/Windows
Quick Basic
Quick Schedule
*Windows
Quickmenu
Quorum
Rapid File
Reality
Recipe Cost & Size
Rolodex Live
Satmapper
Scanning Gallery Plus
Sculptura/Windows
Select Software Tools
SF Moor
Shop Foreman Diag.
Sidekick Plus
Sideways
Signal Proc. Toolbox/Win
Slidewrite
Smart Art
Smarterm 240
Spanner/Windows
Spell CAD
Stacker
Stanford Graphics
Stat. for Mathcad
Structural Analysis
Supercalc SC4
Tab Pro/Windows
Tango Schematic
Time Line Graphics
TrafficWatch
Turbo C Professional
Ultrapaint
Unixware
VBAssist
*Visio
Visual Basic
Visual C++
Wefax/Megaview
Weidemann
*Windows for Workgroups
Windows NT
Winfax Pro
*Wordperfect
Xtree/Windows

Table VI-5 (cont.)

# VI. INFORMATION TECHNOLOGY (CONT.)

## 2. HARDWARE

### A. GENERAL

AUTEC could not fulfill its assigned mission without Information Technology (IT) resources to collect and process data. Efficient, well-documented systems, comprised of reliable, well-maintained hardware, are essential to satisfying not only the test needs of AUTEC's customers, but also for the effective operation and management of the entire AUTEC program.

### B. DESCRIPTION

AUTEC's IT hardware resources encompass all of the computers/peripherals associated with the acquisition, processing, display, analysis, control, and delivery/distribution of data products from the AUTEC Ranges. Also included is hardware used for all of the administrative tasks necessary to accomplish AUTEC's day-to-day business activities. Lists of AUTEC's IT hardware are provided in Tables VI-6 and VI-7. These lists are considered to be representative. Actual inventory is as provided by NUWC. The extent to which the hardware systems are described herein does not include the physical networks or communication equipment beyond each local system hardware configuration, however it does include the product distribution hardware associated with data deliverables, e.g., printers, modems, etc.

Hardware support requirements include the following: conduct of scheduled preventive maintenance; corrective maintenance performed by module replacement; acquisition of vendor technical services; on-call support for mission-critical operations; normal-work-hour support for on-site non-real-time trouble-shooting; maintenance of technical documentation; and configuration control of all resources.

### C. CONTRACTOR RESPONSIBILITIES

1. The Contractor shall support AUTEC's IT hardware needs in accordance with the AUTEC Schedule of Operations, published Operations Directives, Workload Factors given in paragraph D, Applicable Documents cited in paragraph F, and other requirements stated below. Special requirements may be tasked by NUWC Work Order or Letter of Direction.

2. The general approach to accomplishing AUTEC's IT hardware needs is that routine day-to-day tasks shall be accomplished by the Contractor. Arrangements for manufacturer or other procured services to support occasional, extraordinary, or specialty requirements related to this area shall be made by the Contractor on a case-by-case basis considering cost-effectiveness, schedule, or other requirements as approved by NUWC.

3. The Contractor shall maintain all classified/unclassified computers and their associated peripheral equipments in an operational status except during scheduled maintenance periods authorized by NUWC. The maintenance of most Digital Equipment Corporation (DEC) hardware (VAX 8350, and MICROVAX IIs) shall be GFE, under a third party contract administered by NUWC. The Contractor shall ensure that, to the maximum extent possible, all scheduled maintenance is conducted outside normal workhours and on a not-to-interfere basis with scheduled real-time or post-test data processing, and other daily operational requirements. The Contractor shall follow standards and procedures established by applicable OCDs and/or delineated in maintenance and operation manuals provided the equipment manufacturers.

4. The Contractor shall follow approved AUTEC operational procedures and guidelines for computer hardware procurement, accounting, configuration control, etc., as contained in applicable/relevant OCDs and APP 8-46G.

5. The Contractor shall provide an Information Systems Coordinator (further described in Chapter VI(1) of this Specification) to oversee and coordinate all technical and operational functions relating to AUTEC project IT support, including but not limited to: IT hardware maintenance and repair; short and long-term IT planning; and providing a single point-of-contact for NUWC and other Contractor personnel for resolution/solution of IT problems and issues. The Information Systems Coordinator, assisted by others, shall be qualified to perform and/or oversee the following tasks:

a. IT hardware fault isolation and corrective maintenance.

b. Conduct long-term planning, system analysis, and system design studies; prepare technical reports describing projected needs, problems, viable options, and recommended courses of action as appropriate.

c. Evaluate IT changes and improvements as proposed by others. Prepare requisite reports and recommended courses of action as appropriate. Coordinate with/assist the Systems Engineering and Analysis (SE&A) Group as appropriate. See Chapter XVI of this Specification.

d. Troubleshoot, identify, analyze, and develop corrections for reported problems with all IT hardware.

e. Install, integrate, and check-out new/modified IT hardware/firmware on all IT systems.

f. - - - - - *deleted* - - - - -

g. Be the point-of-contact to field trouble calls pertaining to all IT hardware problems. Diagnose problems, offer informed advice, schedule on-site help, and track and maintain a record of reported problems and their resolutions.

h. Provide NUWC Work Order support.

i. Provide technical interface with NUWC/other activities.

6. The Contractor shall install, check-out, maintain, tune, and operate all AUTEC IT hardware resources in accordance with the standards and procedures established by applicable/relevant OCDs and/or as delineated in maintenance and operation manuals provided by the manufacturer(s). The Contractor shall support all installation hardware configuration changes, and equipment relocations as requested by NUWC.

7. The Contractor shall abide by the AMS for all existing IT hardware. Maintenance of new equipment will be based on manufacturer-recommended procedures and/or new AMS procedures to be developed by the Contractor.

8. The general approach to corrective maintenance of AUTEC's IT hardware shall be to restore all equipment to operational status as quickly

as possible by replacement of modules and subassemblies. Restoration of mission-critical real-time and post-test IT hardware systems operation shall be within three hours. The modules/sub-assemblies may then be either repaired by the Contractor or the manufacturer or others, whichever NUWC deems to be the most cost effective.

9. The Contractor shall provide an adequate staff of persons qualified to perform the following tasks:

a. Develop and maintain an inventory of Government-provided consumables, expendables, and repair/spare parts for all IT hardware in accordance with the policies provided in Chapter XXI(1) of this Specification.

b. Provide technical support to Purchasing for procurement of IT hardware including: specification writing; technical evaluation of proposals; cost review; technical qualification of sources; preparation of inspection and acceptance procedures; and conduct of acceptance tests.

c. Diagnose system failures; restore system operation, and repair item as appropriate. These personnel shall be generally capable of supporting engineering changes, preparing documentation, performing equipment modification, and installing and testing new equipment.

d. Study operational problems and recommend solutions including preparing or revising operating, installation, or maintenance documents. Periodically review documentation for accuracy. Update preventative/corrective maintenance documentation/practices when needed. Prepare training material and equipment installation checklists.

e. Investigate reliability, maintainability, and/or performance problems with existing equipment and provide recommendations and other necessary support to the SE & A group (see Chapter XVI of this Specification) required to assist them in the correction of such deficiencies.

f. In accordance with procedures addressed in relevant OCDs, support AUTEC's Configuration Management and Configuration/Drawing Control Systems requirements as relate to

IT hardware. Provide/maintain complete and accurate engineering drawings; equipment technical (operating, maintenance, etc.) manuals; parts lists; and other requisite documentation. Prepare/submit relevant Modification Proposals (Mod Props), Equipment Addition/Deletion Notices, Requests for Document Change, Document Change Notices, engineering cost estimates, etc..

g. Arrange for manufacturer or other procured support of IT hardware on a case-by-case basis considering cost effectiveness, schedule, or other requirements as approved by NUWC.

10. The Contractor shall develop/maintain/deliver all required drawings, equipment manuals, studies, failure investigations/analysis, and other documents discussed above, and others as may be requested by NUWC, in a timely manner. Delivered documents shall be complete and accurate.

11. The Contractor shall be responsible for following appropriate security guidelines for classification, identification, marking, and safeguarding of classified IT resources as dictated by the subject matter. The Contractor shall maintain accurate records for accountability purposes. Specific protection for IT system access, as well as administrative, operational, physical, and personnel controls are set forth in Chapter XXIII of this Specification, the current DoD Contract Classification Specification (DD Form 254) as appearing in Section J, Attachment (8), of this Contract, and in appropriate Applicable Documents cited in paragraph F.

12. The Contractor shall submit all NUWC-required technical and administrative reports, described in Chapter XXV of this Specification, as pertain to hardware support for AUTEC's Information Technology systems.

## D. WORKLOAD FACTORS

1. Support is required for correction of all IT hardware problems during normal work hours, and on-call for the real-time and post-test data processing system(s) during periods of scheduled operations outside of normal work hours.

2. All paper work (e.g. Purchase Requisitions, etc.) necessary to

repair mission-essential IT hardware resources shall be generated within one working day after problem discovery.

3. Fielding of trouble calls is required during normal work hours. All calls shall be acknowledged within one hour.

## E. KEY PERSONNEL/PERSONNEL QUALIFICATIONS

None.

## F. APPLICABLE DOCUMENTS

| | |
|---|---|
| DoDD 5200.28 | Security Requirements for Automated Information Systems |
| Other OCDs; | Relevant/Related OCDs as may be listed in Table XV-4 |
| APP 8-46G; | Computer Systems Acquisition, Maintenance, and Control |

## CLASSIFIED INFORMATION SYSTEMS HARDWARE

| Description | Manufacturer | Model No. | Quantity (ASD/WPB) |
|---|---|---|---|
| COMPUTER PC | IBM COMPATIBLE | 286 OR LESS | 4/0 |
| COMPUTER 386 | IBM COMPATIBLE | 386 | 26/1 |
| COMPUTER 486 25 | IBM COMPATIBLE | 486 25 MHZ | 2/0 |
| COMPUTER 486 33 | IBM COMPATIBLE | 486 33 MHZ | 29/0 |
| COMPUTER 486 66 | IBM COMPATIBLE | 486 66 MHZ | 9/4 |
| COMPUTER P 90 | COMPUADD | PENTIUM 90 MHZ | 0/1 |
| COMPUTER P 90 | ZEOS | PANTERA-90 | 0/1 |
| COMPUTER MICROVAX II | DEC | 8350 | 2/0 |
| | - - - - - *deleted* - - - - - | | |
| COMPUTER | HP | 9836 | 1/0 |
| COMPUTER | HP | 9000/750 | 1/1 |
| COMPUTER | HP | VECTRA | 1/0 |
| COMPUTER | SGI | IRIS WKSTN | 32/3 |
| COMPUTER | SGI | INDIGO WKSTN | 5/1 |
| COMPUTER | SGI | INDY | 3/1 |
| COMPUTER LAPTOP | IBM | THINKPAD 755CX | 1/0 |
| COMPUTER BUS ANAL. | VMETRO | VME BUS ANALYZER | 1/0 |
| DRIVE CD ROM | HP | VARIOUS | 1/0 |
| DRIVE CD ROM | SONY | EXTERNAL | 2/1 |
| DRIVE CD ROM | TOSHIBA | EXTERNAL | 2/1 |
| DRIVE DISK REMOVABLE | AST | 60/200 MB | 23/0 |
| DRIVE DISK EXTERNAL | BERING | BERNOULLI | 1/0 |
| DRIVE DISK | DEC | RA-60 | 2/2 |
| DRIVE DISK | DEC | RA-81 | 2/0 |
| DRIVE DISK | HP | EXTERNAL | 10/2 |
| DRIVE DISK | HP | DUAL FLOPPY | 4/4 |
| DRIVE DISK EXTERNAL | IOMEGA | BERNOULLI | 1/0 |
| DRIVE DISK REMOVABLE | IMPRIMIS | VARIOUS | 20/1 |
| DRIVE DISK REMOVABLE | NEC | 128 MB | 1/0 |
| DRIVE DISK REMOVABLE | SEAGATE | VARIOUS | 22/3 |
| DRIVE DISK REMOVABLE | TEXAS INST | 128 MB | 2/0 |
| DRIVE DISK REMOVABLE | MICROPOLIS | 1.051 GB | 3/0 |
| DRIVE DISK | MICROPOLIS | 1.3 GB | 3/0 |
| DRIVE DISK REMOVABLE | MPI | VARIOUS | 3/0 |

**CLASSIFIED INFORMATION SYSTEMS HARDWARE**

| Description | Manufacturer | Model No. | Quantity (ASD/WPB) |
|---|---|---|---|

| Description | Manufacturer | Model No. | Quantity (ASD/WPB) |
|---|---|---|---|
| DRIVE DISK REMOVABLE | MPI | 115MB | 1/0 |
| DRIVE DISK REMOVABLE | SGI | VARIOUS | 1/2 |
| DRIVE DISK | SONY | OPTICAL | 1/0 |
| DRIVE DISK REMOVABLE | WESTERN DIGITAL | 340/730 MB | 0/2 |
| DRIVE TAPE | DEC | 9 TRACK | 2/1 |
| DRIVE TAPE | DEC | 7 TRACK | 2/0 |
| DRIVE TAPE | DEC | 10 TRACK | 2/0 |
| DRIVE TAPE | DEC | CARTRIDGE TK50 | 1/1 |
| DRIVE TAPE | KENNEDY | 9 TRACK | 5/0 |
| DRIVE TAPE | HP | 4MM DAT | 1/0 |
| DRIVE TAPE | HP | 9 TRACK | 1/0 |
| DRIVE TAPE | HONEYWELL | ASH34 | 1/0 |
| DRIVE TAPE | SUNDSTRAND | CARTRIDGE FDRS | 1/0 |
| DRIVE TAPE | UNISYS | BACKUP | 1/0 |
| DRIVE TAPE | WANGTEK | BACKUP | 3/0 |
| DRIVE TAPE | WESTINGHOUSE | PLAYBACK DS-311 | 2/0 |
| DRIVE TAPE | WINCHESTER | 4MM DAT | 1/0 |
| DRIVE TAPE | CONNER | CT D8000-E-S | 1/0 |
| DRIVE TAPE | EXABYTE | 8MM 8505XL | 2/0 |
| DRIVE DISK | FALCON SYSTEMS | AUT-93-5-009 | 1/0 |
| | | | |
| MODEM | ARTEC | FIBER OPTIC RCVR | 1/0 |
| MODEM | AVANTI | 3002 | 2/0 |
| MONITOR | DEC | CRT | 18/0 |
| MONITOR/TERMINAL | HP | 700/VARIOUS | 8/0 |
| MONITOR/TERMINAL | DEC | VT-VARIOUS | 25/2 |
| MONITOR | COMPUADD | VARIOUS | 34/6 |
| MONITOR | CTX | 15" | 1/0 |
| MONITOR | HITACHI | 25M | 1/0 |
| MONITOR | HP | 1311B | 1/0 |
| MONITOR | ISC | 8001B | 5/0 |

Table VI-6

**CLASSIFIED INFORMATION SYSTEMS HARDWARE**

| Description | Manufacturer | Model No. | Quantity (ASD/WPB) |
|---|---|---|---|
| MONITOR | JVC | 20" RGB | 44/2 |
| MONITOR | MAG | 15" SVGA | 1/3 |
| MONITOR | NEC | 14" | 3/3 |
| MONITOR | MITSUBISHI | 20"/27"/37" | 5/5 |
| MONITOR | NOKIA | SVGA | 0/1 |
| MONITOR | PRINCETON | VGA | 2/0 |
| MONITOR | SGI | 19" RGB | 6/0 |
| MONITOR | SAMTRON | 14" | 1/0 |
| MONITOR | SONY | VARIOUS | 3/0 |
| MONITOR | UNISYS | 14" | 4/0 |

**CLASSIFIED INFORMATION SYSTEMS HARDWARE**

| Description | Manufacturer | Model No. | Quantity (ASD/WPB) |
|---|---|---|---|
| MONITOR | ZENITH | MONCHROME | 5/0 |
| MONITOR | ZEOS | 15" | 1/0 |
| MONITOR/TERMINAL | TELEVIDEO | 910/925/965 | 41/0 |
| MONITOR/TERMINAL | TWO TECHNOLOGIES | 8045 | 2/0 |
| PLOTTER | CALCOMP | 11" COLOR | 4/0 |
| PLOTTER | CALCOMP | 13" COLOR | 2/0 |
| PLOTTER | HP | VARIOUS | 7/5 |
| PLOTTER/PRINTER | VERSATEC | 11"/24" | 10/1 |
| PRINTER | DATA PRODUCTS | BAND 1200 LPM | 2/0 |
| PRINTER | DATA PRODUCTS | BAND 1500 LPM | 2/0 |
| PRINTER | DATA PRODUCTS | BAND 1000 LPM | 2/0 |
| PRINTER | CANON | BUBBLE JET | 1/0 |
| PRINTER | DEC | LINE HIGH SPD | 1/1 |
| PRINTER | DEC | DOT MATRIX | 14/1 |
| PRINTER | EPSON | DOT MATRIX | 3/0 |
| PRINTER | HP | DOT MATRIX | 3/1 |
| PRINTER | HP | INKJET COLOR | 1/2 |
| PRINTER | HP | LASER JET | 10/6 |
| PRINTER | PANASONIC | DOT MATRIX | 5/4 |
| PRINTER | PRINTRONIX | DOT MATRIX | 1/0 |
| PRINTER | QMS | LASER | 2/0 |
| PRINTER | INFOSCRIBE | 500 | 6/0 |
| HOST IOP | MUPAC | CABINET (A)/(B) | 2/0 |
| PROM PROGRAMMER | DATA I/O | PROM PROGRAMMER | 2/0 |
| POWER UNIT | DEC | CVC | 1/1 |

Table VI-6 (cont.)

## CLASSIFIED INFORMATION SYSTEMS HARDWARE

| Description | Manufacturer | Model No. | Quantity (ASD/WPB) |
|---|---|---|---|
| PTS INFORMATION SYSTEMS HARDWARE | | | |
| CD-ROM DRIVE | SUN | 595-1929-05 | 0/6 |
| EXTERNAL DISK DRIVE | DATASTOR | NA | 0/1 |
| EXTERNAL DISK DRIVE | FALCON | 2081309 | 0/1 |
| EXTERNAL DISK DRIVE | FALCON | 3012607 | 0/1 |
| EXTERNAL DISK DRIVE & 1/4 TAPE DRIVE | FALCON | NA | 0/1 |
| EXTERNAL DISK DRIVE, REMOVABLE MAGNETO OPTICAL 1.3 GBYTE | ARTECON | DSU1-300P2 | 0/2 |
| EXTERNAL DISK DRIVE, REMOVABLE MAGNETO OPTICAL 2.6 GBYTE | ARTECON | NA | 0/1 |
| EXTERNAL DISK DRIVE, REMOVABLE BERNOULLI CARTRIDGE | IOMEGA | NA | 0/1 |
| EXTERNAL DISK DRIVE, REMOVABLE BERNOULLI CARTRIDGE | IOMEGA | B2150A-UNI | 0/3 |
| FILE SERVER, 670 DUAL PROCESSOR | SUN | 599-1829-04 | 0/1 |
| MODEM | TELEBIT | T2500 | |
| MONITOR 16” | SUN | GDM-1662B | 0/1 |
| MONITOR 16” | SUN | GDM-1604A15 | 0/1 |
| MONITOR 16” | SUN | FC16AS | 0/2 |
| MONITOR 19” | SUN | GDM-1962B | 0/7 |
| MONITOR 21” | HDS | C/T-200 | 0/2 |
| PRINTER, SPARC LASER | SUN | QA-6 | 0/5 |
| PRINTER, COLOR | TEKTRONIX | 200E | 0/1 |
| PRINTER, NETWORK INTERFACE | TEKTRONIX | 4511A | 0/1 |
| TAPE DRIVES, 1/4” CARTRIDGE | SUN | 595-1711-01 | 0/5 |
| TAPE DRIVES, 8MM CARTRIDGE | SUN | NA | 0/4 |
| UNINTERRUPTABLE POWER SUPPLY | BEST | NA | 0/2 |
| UNINTERRUPTABLE POWER SUPPLY | ONGUARD | UPS1-1.2K-1G-SBS | 0/2 |
| WAN ADAPTER | TELEBIT | NET BALZER ST | 0/2 |
| WORKSTATION, IPC | SUN | 600-2575-05 | 0/3 |
| WORKSTATION, SPARC 1+ | SUN | 600-2540-01 | 0/1 |
| WORKSTATION, SPARC 10 | SUN | NA | 0/6 |

Table VI-6 (cont.)

UNCLASSIFIED INFORMATION SYSTEMS HARDWARE

| Description | Manufacturer | Model No. | Quantity |
|---|---|---|---|
| CAMERA VIDEO HEAD W/LENS | JVC | TK107OU | 1 |
| CD ROM EXTERNAL DRIVE | SONY | 6251A | 5 |
| CLEANER/EVALUATO MAGTAPE | CENTURY | 22 | 1 |
| COMPUTER | IBM COMPAT. | VARIOUS | 19 |
| COMPUTER 330 | HP | VARIOUS | 3 |
| COMPUTER 386/25 | COMPUADD | 386 | 15 |
| COMPUTER 386/33 | COMPUADD | 386 | 1 |
| COMPUTER 386SX/20 | COMPUADD | 386 | 1 |
| COMPUTER 486 DX | COMPUADD | 486 | 5 |
| COMPUTER 486 DX2-66 | COMPUADD | 486 66 | 1 |
| COMPUTER 486/33 | COMPUADD | 486 33 | 4 |
| COMPUTER 486/33 TOWER | COMPUADD | 486 33 | 3 |
| COMPUTER 486/66 | COMPUADD | 486 66 | 5 |
| COMPUTER 486/66E | GATEWAY | 486 66 | 3 |
| COMPUTER 486/66V TOWER | GATEWAY | 486 66 | 2 |
| COMPUTER 486DX | COMPUADD | 486 | 3 |
| COMPUTER 486DX 33 VLB | COMPUADD | 486 33 | 1 |
| COMPUTER 486DX-33 | ZEOS | 486 33 | 2 |
| COMPUTER 486DX2-66 | ZEOS | 486 66 | 6 |
| COMPUTER 486DX250N | COMPUADD | 486 50 | 1 |
| COMPUTER 486DX33VLB | SWAN | 486 33 | 1 |
| COMPUTER 486DX4-75 | IBM | 486 75 | 1 |
| COMPUTER 80486/33 | COMPUADD | 486 33 | 1 |
| COMPUTER 80486/DX66 | ZEOS | 486 66 | 1 |
| COMPUTER AMIGA | COMMODORE | 68040/30 | 2 |
| COMPUTER APPLE IIGS | APPLE | IIGS | 6 |
| COMPUTER DAA EXTRACTOR | BI-LINK | 486 33 | 1 |
| COMPUTER DATA SYSTEMS | ZENITH | 286 | 1 |
| COMPUTER DECMATE II | DEC | PC278 | 4 |
| COMPUTER DECMATE III | DEC | PC238 | 20 |
| COMPUTER DIGITAL | HP | HP-85 | 1 |
| COMPUTER DTST 4D25S | SGI | 4D25 | 1 |
| COMPUTER INDIGO | SGI | INDIGO | 6 |
| COMPUTER LAP TOP TRS-80 | TRS-80 | TANDY | 6 |
| COMPUTER LAPTOP | AST | CS10 | 8 |
| COMPUTER LAPTOP | IBM | THINKPAD | 2 |
| COMPUTER MAC II | APPLE | M5000/5430 | 2 |

Table VI-7

UNCLASSIFIED INFORMATION SYSTEMS HARDWARE

| Description | Manufacturer | Model No. | Quantity |
|---|---|---|---|
| COMPUTER MAC II CX | APPLE | M5650 | 1 |
| COMPUTER MAC PLUS | APPLE | M0001A | 9 |
| COMPUTER MAC SE | APPLE | M5010 | 3 |
| COMPUTER MICRO | INTEL | 86/330 | 1 |
| COMPUTER VAX | DEC | 4705A | 1 |
| COMPUTER MT | COMPUADD | 486 66 | 1 |
| COMPUTER NOTEBOOK | VARIOUS | VARIOUS | 39 |
| COMPUTER NOTEBOOK 486/2 | ULTRA | TS34X | 1 |
| COMPUTER NOTEBOOK PC | COMPUADD | VARIOUS | 10 |
| COMPUTER P5-75 | COMPUADD | P 75 | 5 |
| COMPUTER P5-90 | ZEOS | P 90 | 1 |
| COMPUTER P90CAD | COMPUADD | P 90 | 1 |
| COMPUTER PC | VARIOUS | VARIOUS | 13 |
| COMPUTER PC 386 | SMOOTH | 386 | 1 |
| COMPUTER PC 386/16 | CONTINE | 386 | 7 |
| COMPUTER PC 386/20 | COMPUADD | 386 | 13 |
| COMPUTER PC 386/25 | COMPUADD | 386 | 105 |
| COMPUTER PC 386/25 TOWER | USA FLEX | 386 | 1 |
| COMPUTER PC 386/33 | COMPUADD | 386 | 42 |
| COMPUTER PC 386/33 TOWER | COMPUADD | 386 | 2 |
| COMPUTER PC 386S | COMPAQ | 386 | 1 |
| COMPUTER PC 486/25 | AST | 486 25 | 7 |
| COMPUTER PC 486/33 | COMPUADD | 486 33 | 4 |
| COMPUTER PC 486/33 TOWER | COMPUADD | 486 33 | 13 |
| COMPUTER PC 486/50 | COMPUADD | 486 50 | 1 |
| COMPUTER PC 486/50 TOWER | COMPUADD | 486 50 | 1 |
| COMPUTER PC 486/66 TOWER | COMPUADD | 486 66 | 1 |
| COMPUTER PC LAP TOP | VARIOUS | VARIOUS | 12 |
| COMPUTER PC LAP TOP 286 | ZEOS/NEC | 286 | 3 |
| COMPUTER PC LAP TOP 386 | ZEOS/TI | 386 | 9 |
| COMPUTER PC NOTEBOOK | VARIOUS | VARIOUS | 5 |
| COMPUTER PC PORTABLE | COMPAQ | 2660 | 1 |
| COMPUTER PC VECTRA | HP | 45945A | 2 |
| COMPUTER PC-AT | ZENITH | 286 | 39 |
| COMPUTER PC-AT/12 | VARIOUS | VARIOUS | 10 |

Table VI-7 (cont.)

UNCLASSIFIED INFORMATION SYSTEMS HARDWARE

| Description | Manufacturer | Model No. | Quantity |
|---|---|---|---|
| COMPUTER PC-AT/16 | JAMECO | 3013 | 1 |
| COMPUTER PC-XT | IBM | 5160 | 3 |
| COMPUTER PENTIUM 90 | EVEREX | P 90 | 2 |
| COMPUTER PENTIUM P5-90 | COMPUADD | P 90 | 4 |
| COMPUTER PENTIUM P5-90P+ | ZEOS | P 90 | 1 |
| COMPUTER PENTIUM P60 | DELL | P 60 | 6 |
| COMPUTER PENTIUM-90 | COMPUADD | P 90 | 3 |
| COMPUTER PERSONAL | SHARP | 7750 | 1 |
| COMPUTER PORTABLE | VARIOUS | VARIOUS | 2 |
| COMPUTER PORTABLE W/STA | TOSHIBA | T4400SXC | 2 |
| COMPUTER PS-90 | ZEOS | P 90 | 2 |
| COMPUTER RDF W/COMPONENT | HP | 9920A | 1 |
| COMPUTER RETAIL STORE | NCR | 1015 | 1 |
| COMPUTER SERIES CNSL#6 | HP | 21MX | 1 |
| COMPUTER SERIES CNSL#7 | HP | 21MX | 1 |
| COMPUTER SYSTEM A | HP | 700 | 1 |
| COMPUTER SYSTEM DESK-TOP | TEK | 4052 | 1 |
| COMPUTER TERMINAL | DEC | VT 420 | 1 |
| COMPUTER VAX 4000 | DEC | 4000 | 1 |
| COMPUTER VAX 8350 | DEC | 8350 | 1 |
| COMPUTER W/ KEYBOARD | PACKARD BELL | 286 | 1 |
| COMPUTER W/SPEAKERS | ORCHEST | FLEX | 2 |
| COMPUTER WEATHER ADVANCE | HEATH | 5001 | 1 |
| COMPUTER WEATHER STATION | HEATH | 4001 | 1 |
| CONTROL TAPE REMOTE | HONEYWELL | T394 | 1 |
| CONTROLLER AC | NOSC | 0108401-1 | 2 |
| CONTROLLER BUS | IOTECH | 488 | 2 |
| CONTROLLER MAGNETIC TAPE | DYLON | 1015B-2 | 1 |
| CONTROLLER/MONITOR RF | NOSC | 0108630-1 | 2 |
| CONVERTER NTSC IMAGESMRT | NEC | IDC-1000 | 2 |
| DEGAUSSER TAPE | CPU-LIN | 515 | 6 |
| DEGAUSSER TAPE MAGNETIC | CPU-LIN | 515 | 1 |
| DEVICE SHARING DIGITAL | MOTOROLA | 47050 | 2 |

Table VI-7 (cont.)

UNCLASSIFIED INFORMATION SYSTEMS HARDWARE

| Description | Manufacturer | Model No. | Quantity |
|---|---|---|---|
| DIGITIZER TABLET | SUMMAGR | MMII 1201 | 5 |
| DIGITIZING TABLET | SUMMAGR | MMII 120 | 5 |
| DISC SUBSYSTEM DATASAFE | WINCHESTER | 18MB | 1 |
| DIVICE INPUT/OUPUT | HP | 9888 | 1 |
| DRIVE BACK-UP TAPE | VARIOUS | VARIOUS | 5 |
| DRIVE CD-ROM EXTERNAL | SONY | 6251A | 6 |
| DRIVE CD-ROM EXTERNAL | SONY | 6250 | 56 |
| DRIVE CD-ROM SCSI EXTERNAL | TOSHIBA | TXM3301E1 | 5 |
| DRIVE CD-ROM UNIT | 6100 | SONY | 4 |
| DRIVE DISC | VARIOUS | VARIOUS | 4 |
| DRIVE DISC 760 MB FH | SGI | P5-D76S | 1 |
| DRIVE DISC BERNOULLI | BERING | 00112 | 1 |
| DRIVE DISC DUAL 3.5 | HP | 9122D | 5 |
| DRIVE DISC DUAL 8" | VARIOUS | VARIOUS | 2 |
| DRIVE DISC DUAL FLOPPY | HP | 9121D | 1 |
| DRIVE DISC FLEXIBLE | HP | 9133H | 1 |
| DRIVE DISC FLOPPY | INT SYSTEMS | MDS 720 | 1 |
| DRIVE DISC FLOPPY 3.5 | APPLE | A9M0106 | 7 |
| DRIVE DISC FLOPPY 5.25 | APPLE | A9M0107 | 6 |
| DRIVE DISC HARD | VARIOUS | VARIOUS | 12 |
| DRIVE DISC HARD 2.0GB | COMPUPL | CP6205IS | 3 |
| DRIVE DISC HARD 20MBYTE | HP | 9133D | 1 |
| DRIVE DISC HARD FIXED | DEC/CDC | RA81/BZ7E1C | 5 |
| DRIVE DISC REMOVABLE | MPI | 8192 | 6 |
| DRIVE DISC SINGLE 3.5 | HP | 9122S | 2 |
| DRIVE DISC STS | BERING | 09330 | 1 |
| DRIVE DISC/BERNOULLI | IOMEGA | 150 | 1 |
| DRIVE DISC/BERNOULLI BOX | IOMEGA | 210H/220H | 5 |
| DRIVE DISK | VARIOUS | VARIOUS | 4 |
| DRIVE DISK DUAL 8" | BERING | 5840 | 1 |
| DRIVE DISK EXTERNAL | ZENITH | 180-54 | 1 |
| DRIVE DISK HARD | AST | 220852 | 36 |

Table VI-7 (cont.)

UNCLASSIFIED INFORMATION SYSTEMS HARDWARE

| | | | |
|---|---|---|---|
| DRIVE DISKETTE DUAL | IBM | 6360-011 | 5 |
| DRIVE HARD DISK | VARIOUS | VARIOUS | 9 |
| DRIVE HARD DISK RA-60 | DEC | RA-60 | 1 |
| DRIVE OPTICAL DISK | SONY | E501 | 1 |
| DRIVE OPTICAL ERASABLE | INTROL | 51024-10 | 1 |

| Description | Manufacturer | Model No. | Quantity |
|---|---|---|---|
| DRIVE TAPE 10 TRACK | KENNEDY | 2800 | 2 |
| DRIVE TAPE 14 TRACK | AMPEX | FR 3025 | 1 |
| DRIVE TAPE 7 TRACK | VARIOUS | VARIOUS | 5 |
| DRIVE TAPE 8MM SCSI | COMTECH | CY8500 | 1 |
| DRIVE TAPE 9 TRACK | KENNEDY | 9300 | 7 |
| DRIVE TAPE CASSETTE BKUP | WANGTEK | 5150EQ | 1 |
| DRIVE TAPE DATASAFE | WINCHESTER | DSFTU-SB-1T4 | 1 |
| DRIVE TAPE EXTERNAL | IRWIN | 420 XT-02 | 1 |
| DRIVE TAPE MAGNETIC | HP | 7979A | 4 |
| DRIVE TAPE STREAMING | HP | 9144A | 3 |
| ERASER INDUSTRIAL EPROM | ULTRA V | UVS-54 | 1 |
| EVALUATOR/CLNR MAG TAPE | CARLISLE | 65000-2 | 2 |
| EXERCISER TAPE DRIVE | KENNEDY | 9219TB | 2 |
| EXERCISER TEST MATRIX | VERSATEC | MTE-15 | 1 |
| EXPANDER BUS | HP | 9888A | 2 |
| EXTENDER MULTIPROGRAMMER | HP | 6943A | 1 |
| FLOPPY BACK-UP SYSTEM | QUADRAM | QUADFLEXTRA | 1 |
| FORMATTER MAG TAPE | KENNEDY | 9129-288 | 1 |
| FORMATTER MAG TAPE 7 TRK | PERTEC | F849-60/36 | 1 |
| GENERATOR CHARACTER MAX | MYCROTEC | MV-1000 | 1 |
| GENERATOR NTSC COLOR | TEK | 1470 | 4 |
| GENERATOR TIME CODE | DATUM | 9100 | 9 |
| INTERFACE RADAR/ACOUSTIC | AUTEC | HCI-18-MI | 1 |
| | | VARIOUS | |
| KEYBOARD COMPUTER | KEY TRO | MB101 | 2 |
| KEYBOARD DIGITAL L/SYS | KROY | 2254512 | 1 |
| MICROBUFFER | PRACTICAL | 4093P | 6 |
| MICROCPU DEVEL SYSTEM | INT SYSTEMS | MDS225 | 1 |
| MODEM | VARIOUS | VARIOUS | 47 |
| MODEM 1200 BAUD | BLACKBOX | 1200H | 1 |
| MODEM 14.400 | US ROBOTICS | SPORTSTER 14.4 | 1 |
| MODEM 19200BPS DIALUP EX | TELEBIT | T25A-251 | 2 |

Table VI-7 (cont.)

UNCLASSIFIED INFORMATION SYSTEMS HARDWARE

| | | | |
|---|---|---|---|
| MODEM 2400 BAUD | ZENITH | ZM-2401 | 1 |
| MODEM 2400 BAUD EXTERNAL | VARIOUS | VARIOUS | 30 |
| MODEM 28.8 | US ROBOTICS | SPORTSTER 28.8 | 2 |

| Description | Manufacturer | Model No. | Quantity |
|---|---|---|---|
| MODEM 9600 BAUD EXTERNAL | UNISYS | 9600 EXT | 1 |
| MODEM 9600BPS DIALUP EXT | TELEBIT | T1000 | 2 |
| MODEM DRIVER LINE | MISCO | RD1005 | 3 |
| MODEM EXTERNAL | VARIOUS | VARIOUS | 6 |
| MODEM FIBER OPTIC | FIBERCO | 2050-01 | 5 |
| MODEM HIGH SPEED | DYNETRICS | ASM-20SA/64 | 3 |
| MODEM JETFAX II | JETFAX | 9211/9214 | 1 |
| MODEM LIMITED DISTANCE | CODEX | 2111/2177 | 5 |
| MODEM OPTIMA 9600 | HAYES | 5110AM | 7 |
| MODEM PRIVATE LINE | GENERAL | 202 | 3 |
| MODEM SHORE DATA LINK | GEN DATA | A9N-0045 | 1 |
| MODEM STAND ALONE | GANDALF | LDS120E | 6 |
| MODEM W/NETWORK CONTROL | CODEX | 2123 | 20 |
| MONITOR | VARIOUS | VARIOUS | 78 |
| MONITOR (RF SHIELDED) | DEC | VR 201 | 1 |
| MONITOR - EGA | ZENITH | ZM-1380 | 14 |
| MONITOR - EGA 14" | RELISYS | RE5154E | 1 |
| MONITOR - EGA COLOR | HYUNDAI | HCM-1420 | 1 |
| MONITOR - EGA MONOCHROME | ZENITH | ZM-1470G | 4 |
| MONITOR - S/VGA 14" | COMPUADD | 51091 | 58 |
| MONITOR - S/VGA 15" | COMPUADD | 51086 | 8 |
| MONITOR - VGA | VARIOUS | VGA | 12 |
| MONITOR - VGA 14" | VARIOUS | 14" | 13 |
| MONITOR - VGA GRAPHICS | NEC | JC-1501VMA | 1 |
| MONITOR - VGA MONOCHROME | VARIOUS | VARIOUS | 4 |
| MONITOR 14" COLOR | TATUNG | CM14UAS | 1 |
| MONITOR 14" COLOR SVGA | ADC | CM-346 | 5 |
| MONITOR 15" | VARIOUS | 15" | 11 |
| MONITOR 15" CSVGA | CTX/COMPUADD | 15" | 5 |
| MONITOR 15" KFC | COMPUADD | CA1515DL | 4 |
| MONITOR 15" NIVGA | COMPUADD | TE1564M | 12 |
| MONITOR 15" SVGA | ACER | 7156 | 3 |
| MONITOR 15" VIDEO DISPLAY | GATEWAY | CS1572 | 6 |
| MONITOR 16" | MITSUBISHI | FS6605ATK | 7 |
| MONITOR 17" | VIEWSONIC | 1782-2 | 11 |

Table VI-7 (cont.)

UNCLASSIFIED INFORMATION SYSTEMS HARDWARE

| Description | Manufacturer | Model No. | Quantity |
|---|---|---|---|
| MONITOR 17" VGA COLOR | ORCHEST | TYMPANI | 2 |
| MONITOR 20" | SONY | GDM-2039 | 1 |
| MONITOR 21" CSVG | NOKIA | 445M | 1 |
| MONITOR 21" VIEWSONIC | VIEWSONIC | 2181-1 | 1 |
| MONITOR A/N 14" | TELEVIDEO | 965 | 1 |
| MONITOR AMBER 12" | CASPER | GM-1277 | 8 |
| MONITOR COLOR | COMPUADD | 51070 | 3 |
| MONITOR COLOR - S/VGA | EVERVISION | 00500-0A | 1 |
| MONITOR COLOR - SVGA | SAMTRON | SC-431VS | 4 |
| MONITOR COLOR - VGA | COMPUADD | 51109 | 123 |
| MONITOR COLOR 14" | COMPUADD | 51118 | 59 |
| MONITOR COLOR 15" | CTX | CMS0156LR | 1 |
| MONITOR COLOR 17" | CTX/COMPUADD | VARIOUS | 6 |
| MONITOR COLOR MULTISCAN | SONY | CPD-13045 | 1 |
| MONITOR COLOR VGA | CTX/COMPUADD | VARIOUS | 5 |
| MONITOR COLOR VGA 14" | UNISYS | VGA200 | 2 |
| MONITOR COLOR-VGA | COMPUADD | TE1458 | 22 |
| MONITOR CRT | HP | 35731A | 1 |
| MONITOR DISPLAY COLOR | CONRAC | 7211C19 | 22 |
| MONITOR DISPLAY CRT 12" | NCR | 0210 | 1 |
| MONITOR GREEN 12" | AMDEK | V-300 | 2 |
| MONITOR HIGH RES 27" | MITSUBISHI | CS-2724R | 1 |
| MONITOR MONOCHROME | ZENITH | VARIOUS | 5 |
| MONITOR MONOCHROME 15" | ELECTRO | 38-V19NDA-AP | 11 |
| MONITOR MULTI-SCAN 20" | PHILLIPS | FC20AS | 3 |
| MONITOR MULTISCAN | COMMODORE | 1942 | 1 |
| MONITOR MULTISYNC 14" | NEC | JC-1403HMA | 6 |
| MONITOR MVGA | IBM | 53F5796 | 1 |
| MONITOR QUAD-SCAN 16" | JVC | GD-H6116VFW | 5 |
| MONITOR RGB COLOR HI RES | APPLE | M0401 | 2 |
| MONITOR S/VGA 14" | IBM | 8515 | 4 |
| MONITOR S/VGA 15" COLOR | MAG | DX15F | 3 |

Table VI-7 (cont.)

UNCLASSIFIED INFORMATION SYSTEMS HARDWARE

| Description | Manufacturer | Model No. | Quantity |
|---|---|---|---|
| MONITOR VIDEO | SANYO | VM4509 | 10 |
| MONITOR/REC VIDEO CLR 20 | SONY | KV020XBR | 3 |
| MULTIPROGRAMMER | HP | 6942A | 1 |
| PLOTTER DESIGN JET 200 | HP | C3180A | 1 |
| PLOTTER DRAFTING | HP | 7586B | 1 |
| PLOTTER GRAPHIC | HP | 7475A | 14 |
| PLOTTER GRAPHIC DRAFTPRO | HP | 7550A | 5 |
| PLOTTER X-Y | GRAPHITE | MP2300 | 1 |
| POWER SUPPLY - UPS | EXIDE | 1500 | 3 |
| POWER SUPPLY VIDEO | JVC | AC-6712B | 1 |
| POWER UNIT CVC | DEC | H722/VARIOUS | 2 |
| PRINTER | VARIOUS | VARIOUS | 26 |
| PRINTER 360 | KROY | 2263911 | 1 |
| PRINTER BAR CODE | INTER | NONE | 1 |
| PRINTER BUBBLE JET | CANON | BJ-2003X | 1 |
| PRINTER BUBBLEJET | CANON | BJ-20 | 9 |
| PRINTER BW INKJET | HP | C2170A | 4 |
| PRINTER COLOR PHASER II | TELTRONICS | 4698PXI | 1 |
| PRINTER COLOR STYLUS | EPSON | P860A | 1 |
| PRINTER DECWRITER III | DEC | LA-120-AA | 1 |
| PRINTER DECWRITER IV | DEC | LA-34AA | 8 |
| PRINTER DESK JET | HP | C2121A | 1 |
| PRINTER DESKJET | HP | 1200C | 1 |
| PRINTER DESKJET 500 | HP | C2162A | 31 |
| PRINTER DOT MATRIX | VARIOUS | VARIOUS | 162 |
| PRINTER DOT MATRIX WIDE | PANASONIC | KX-P2624 | 75 |
| PRINTER IMAGE WRITER II/III | APPLE | A9M0320/310 | 10 |
| PRINTER LA75 DIGITAL | DEC | LA5 | 2 |
| PRINTER LASER | DEC | LN03A-A2 | 4 |
| PRINTER LASER JET | HP | VARIOUS | 69 |
| PRINTER LASER WRITER II | APPLE | M6000 | 2 |

Table VI-7 (cont.)

UNCLASSIFIED INFORMATION SYSTEMS HARDWARE

| Description | Manufacturer | Model No. | Quantity |
|---|---|---|---|
| PRINTER LETTER QUALITY | DEC/EPSON | LQP02/LQ VARIOUS | 67 |
| PRINTER LINE | VARIOUS | VARIOUS | 20 |
| PRINTER PARALLEL | NCR | 8510 | 1 |
| PRINTER PRINTWHEEL 40/60CPS | IBM | 5218 | 3 |
| PRINTER PROTRACER 11-GL | PACIFIC | 024613 | 1 |
| PRINTER SPINWRITER | NEC | 3530 | 4 |
| PRINTER THINKJET | HP | 2225 | 13 |
| PRINTER VIDEO COLOR | MITSUBISHI | CP110U | 1 |
| PRINTER W/PAPER FEEDER | QMS INC | QMS-860-1 | 1 |
| PRINTER-PINWRITER | NEC | PIN-WRITER | 4 |
| PRINTER/SECURITY CRADLE | TI | PC-100C | 1 |
| PROCESSOR I/O (VT-240) | DEC | VT-240 | 23 |
| PROCESSOR INTELLIGENT | DTK | KEEN-2032 | 1 |
| PROCESSOR INTERFACE SPEC | ENCORE | P502468 | 1 |
| PROGRAMMER DEVICE W/ERAS | NEEDHAM | SA-20 | 1 |
| PROGRAMMER EPROM | JAMECO | JE680 | 1 |
| PROGRAMMER LOGIC/MEMORY | INLAB | 28 | 1 |
| PROGRAMMER ON-LINE UNIV | INTEL | IUP-201 | 1 |
| PROGRAMMER PROM | DATA I/O | 22A | 3 |
| PROGRAMMER UNIVERSALPROM | INT SYSTEMS | UPP 103 | 1 |
| PULSE AMPLITUDE | ITT | C1E51G1 | 1 |
| READER BAR CODE | INTERM | 1545 | 1 |
| READER CARD | DOCUMATE | M2000 | 3 |
| READER WEDGE | INTERM | 9570 | 1 |
| RECORDER ANALOG MAGNETIC | HONEYWELL | 90/96 | 4 |
| RECORDER DATA BRD-7 | AUTEC | JVK-19-NG10200 | 1 |
| RECORDER ELECTROGRAPHIC | EPC LAB | 2218S | 4 |
| RECORDER TAPE ANALOG | THORN EMI | 9000 | 3 |

Table VI-7 (cont.)

UNCLASSIFIED INFORMATION SYSTEMS HARDWARE

| | | | |
|---|---|---|---|
| RECORDER VIDEO CASSETTE | PANASONIC | VARIOUS | 1 |
| RECORDER/READER TAPE | HONEYWELL | ASH34 | 1 |
| RECORDER/REPRODUCER DATA | SUNDSTRAND | 980-01010-001 | 1 |
| RECORDING SYS VHS 8 CHAN | RACAL | WS0802 | 1 |
| SCANNER IMAGE | MICROTEC | MRS-1200ZS | 1 |
| SCANNER LASER | SYMBOL | LS-8110 | 1 |
| SCANNER LINE TEST | MICROTEC | 8050-00 | 1 |

| Description | Manufacturer | Model No. | Quantity |
|---|---|---|---|
| SCANNER OPTICAL DESKTOP | HP | 9195A/C1757A | 3 |
| SCANNER SCANJET IICX | HP | C2507B | 2 |
| SCANNER SCANJET IIP | HP | 1790A | 1 |
| SCANNER W/BOARD | MICROTEC | MS-II/300A | 1 |
| SERVER DISKSIDE | SGI | CMN-A011 | 1 |
| SERVER PATHWORKS | DEC | DL-31ESA-A-A01 | 1 |
| SERVER PLOTTER | FAR MTN | PS100 | 1 |
| SERVER PRINTER | EMULEX | NQ00/01 | 1 |
| SERVER PRINTER ETHERNET | EMULEX | P3000 | 4 |
| SERVER PROSIGNIA | COMPAQ | 486 66 | 1 |
| SONOBUOY TRACKING SYSTEM | CUBIC | STS COMPUTER | 1 |
| STATION DISPLAY MEMORY | IBM | 6580-A04 | 5 |
| STATION DOCKING | AST | 500982-011 | 8 |
| SWITCH PERIPHERAL | ENCORE | CUSTOM | 3 |
| SWITCHING CONTROL & TEST | ITT | C1E34G1 | 3 |
| SYSTEM BACKUP TAPE | MAYNARD | DAT2000/1300 | 2 |
| SYSTEM CONTROL MASTER | CNC | 6523D | 1 |
| SYSTEM DAMS | C&M TEC | 5036 | 1 |
| SYSTEM DATA ACQUISITION | GW INSTRUMENTS | MACADIOS 411 | 1 |
| SYSTEM DATA DISTRIBUTION | NUWC | HBB-05-NI16500 | 1 |
| SYSTEM DEVELOPMENT | INT SYSTEMS | MDS 230 | 1 |
| SYSTEM DISPLAY RAMTEK | RAMTEK | 9465/03L | 2 |
| SYSTEM MEASUREMENT | OCEANDA | VIP-100 | 1 |
| SYSTEM QUAD DIGITI COLOR | PANASONIC | WJ-450 | 2 |
| SYSTEM TAPE CARTR 60MB | EVEREX | EXCEL STREAM 6 | 1 |
| SYSTEM TIME/FREQ GPS | DATUM | 9390 | 1 |

Table VI-7 (cont.)

UNCLASSIFIED INFORMATION SYSTEMS HARDWARE

| | | | |
|---|---|---|---|
| TAPE BACKUP | IOMEGA | 1080-PX2 | 1 |
| TAPE SYSTEM BACKUP | MOUNTAIN | 01-34460-01 | 1 |
| TERMINAL CRT | DEC/TELEVIDEO/ WYSE | TERM ELUATORS | 238 |
| TERMINAL CRT (9020) | HP | 98760 | 3 |
| TERMINAL CRT 12" RGB MON | HP | 35741A | 5 |
| TERMINAL DISPLAY | HP/TEK | 700-22/4014-1 | 7 |
| TERMINAL ENTRY TRACKING | NOSC | 0108618 | 1 |
| TERMINAL INDUSTRIAL | ESC | I-99 | 7 |

| Description | Manufacturer | Model No. | Quantity |
|---|---|---|---|
| TERMINAL PORTABLE DATA | MSI | 1400 | 1 |
| TERMINAL TT8045 HANDHELD | TWO TEC | 80EL45R2 | 2 |
| TEST SET COMPUTER FLD UN | CDC | TB216A | 1 |
| TIME CODE TRANSLATORS | DATUM | 9200 | 2 |
| TRACKING SYS W/3 COMPTS | CHROMAT | CGI599 | 2 |
| WAND DEGAUSSER HAND HELD | APPLIED | AML-6KG | 1 |

Table VI-7 (cont.)

# VI. INFORMATION TECHNOLOGY (CONT.)

## 3. NETWORKS

### A. GENERAL

AUTEC requires reliable network communications at West Palm Beach (WPB) and on Andros Island to meet range data processing, logistics, supply, data transfer, remote communications, and other day-to-day administrative and managerial needs. Networks enable AUTEC project personnel access to the Information Technology (IT) resources described in Chapters VI.1 and VI.2 of this Specification.

### B. DESCRIPTION

AUTEC's networks consist of two primary, segregated, Wide Area Networks (WANs) for classified and unclassified information systems (IS). Each of the WANs has one or more Local Area Network (LAN) segments. WAN connections exist for: Andros Site 1 to AUTEC's Headquarters in West Palm Beach (via satellite); Andros Site 1 to the downrange sites (via microwave); West Palm Beach to Newport, RI (via landline); and AUTEC Headquarters to the facilities at the Palm Beach International airport (via landline). Figures VI-1 and VI-2 depict the classified and unclassified WAN connections, respectively. Figures VI-3 and VI-4 illustrate AUTEC's Andros Island LANs. Table VI-8 provides a representative list of LAN equipment. Actual inventory is as provided by NUWC.

Access methods for network communications at AUTEC are provided by LAN technology based on the Ethernet version 2.0 and IEEE 802.3 standards. Network protocols used include DECnet, XNS and TCP/IP with the latter being AUTEC's primary protocol of choice. Other higher level protocols include Microsoft LAN Manager using NetBIOS and the Sun Microsystems Network File System.

AUTEC's unclassified network serves the West Palm Beach headquarters building and the Contractor's Palm Beach International Airport facility. On Andros Island, the unclassified network serves the Command Control Building, the Torpedo Facility, the Supply Administration Building, the Supply Warehouses, Shipping & Receiving, the Dispensary, Helicopter Hangar, Pilot's Trailer, SE&A Trailer, Power Plant, Marine Operations, Public Works Shop, Security Office, AirOps, RUB 4, Administration East, and Administration West. Through a dedicated T1 line between Newport and West Palm Beach, AUTEC personnel in Newport have access to AUTEC's unclassified network.

The CCB at Site 1 on Andros Island and AUTEC's West Palm Beach Remote Display room are both served by a classified LAN with a Wide Area Network connection to NUWC Newport, RI. Network communication for classified processing is accomplished on Ethernet LANs, along with an encrypted serial link to service multiple remote locations. The ARGOS host computers, along with other general purpose computer equipment and network equipment all use the TCP/IP network protocol suite.

Network support requirements include the following: conduct of scheduled preventive maintenance; corrective maintenance performed by module replacement; acquisition of vendor technical services; on-call support for mission-critical operations; normal-work-hour support for on-site non-real-time trouble-shooting; maintenance of technical documentation; and configuration control of all resources. Mission critical systems include all IT resources which support real-time operations, unclassified network resources, and primary nodes such as the VAX 4705A and network file servers.

## C. CONTRACTOR RESPONSIBILITIES

1. The Contractor shall support AUTEC's IT network needs in accordance with the AUTEC Schedule of Operations, published Operations Directives, Workload Factors given in paragraph D, Applicable Documents cited in paragraph F, and other requirements stated below. Special requirements may be tasked by NUWC Work Order or Letter of Direction.

2. The general approach to accomplishing AUTEC's IT network needs is that routine day-to-day tasks shall be accomplished by the Contractor. Arrangements for manufacturer or other procured services to support occasional, extraordinary, or specialty requirements related to this area shall be made by the Contractor on a case-by-case basis considering cost-effectiveness, schedule, or other requirement as approved by NUWC.

3. The Contractor shall maintain all of AUTEC's Local Area Networks (LANs), Wide Area Network (WAN) connections, and all associated equipments in an operational status except during scheduled maintenance periods authorized by NUWC. The Contractor shall assure that, to the maximum extent possible, all routine maintenance, upgrades, testing, and configuration changes which may require/cause LAN/WAN downtime are accomplished outside normal work hours and on a not-to-interfere basis with scheduled real-time or post-test data processing, and other daily operational requirements. The Contractor shall follow standards and procedures established by applicable OCDs and/or delineated in maintenance and operation manuals provided by the equipment manufacturers.

4. The Contractor shall follow approved AUTEC operational procedures and guidelines for hardware/software procurement, accounting, configuration control, etc., as contained in applicable/relevant OCDs and APP 8-46G.

5. The Contractor shall provide an Information Systems Coordinator (further described in Chapter VI(1) of this Specification) to oversee and coordinate technical and operational functions relating to all AUTEC project IT support, including but not limited to: IT network administration; short and long-term IT planning; and providing a single point-of-contact for NUWC and other Contractor personnel for the resolution/solution of IT problems and issues. The Information Systems Coordinator, assisted by others, shall be qualified to perform and/or oversee the following tasks:

a. IT network fault isolation and corrective maintenance

b. Conduct long-term planning, system analysis, and system design studies; prepare technical reports describing projected needs, problems, viable options, and recommended courses of action as appropriate.

c. Evaluate IT changes and improvements as proposed by others. Prepare requisite reports and recommended courses of action as appropriate. Coordinate with/assist the Systems Engineering and Analysis Group as appropriate. See Chapter XVI of this Specification.

d. Perform baseline analyses and capacity planning and troubleshoot, identify, conduct trend analysis, and develop corrections for reported problems with all IT networks.

e. Install, integrate and check-out new/modified network equipment.

f. - - - - - *deleted* - - - - -

g. Be the point-of-contact to field trouble calls pertaining to network problems. Diagnose problems, offer informed advice, schedule on-site help, and track and maintain a record of reported problems and their resolutions.

h. Provide NUWC Work Order support.

i. Provide technical interface with NUWC/other activities.

j. Provide for cost-effective design, implementation, and management of all AUTEC project Local and Wide Area Networks.

6. The Contractor shall install, check-out, maintain, and operate all AUTEC AIS LAN/WAN resources in accordance with the standards and procedures established by applicable/relevant OCDs and/or as delineated in maintenance and operation manuals provide by the manufacturer(s). The Contractor shall support all installations, hardware configuration changes, and equipment relocations as requested by NUWC.

7. The Contractor shall abide by the AMS for all existing LAN/WAN resources. Maintenance of new equipment will be based on manufacturer-recommended procedures and/or new AMS procedures to be developed by the Contractor.

8. The general approach to corrective maintenance of AUTEC's LAN/WAN resources shall be to restore all equipment to operational status as soon as possible by replacement of modules and sub-assemblies. Restoration of networking resources/capabilities shall be accomplished within three hours for mission-critical systems and services, and within one working day for all other systems and services. The modules/sub-assemblies may then be repaired by either the Contractor or the manufacturer or others, whichever NUWC deems to be most cost effective. All network faults/problems, whether resolved or not, shall be reported to NUWC within 24 hours after discovery.

9. The Contractor shall provide an adequate staff of persons qualified to perform the following tasks:

a. Develop and maintain an inventory of Government-provided consumables, expendables, and repair/spare parts for

all LAN/WAN equipment in accordance with the policies provided in Chapter XXI(1) of this Specification.

b. Provide technical support to Purchasing for procurement of LAN/WAN resources including: specification writing; technical evaluation of proposals; cost review; quality review; technical qualification of sources; preparation of inspection and acceptance procedures; and conduct of acceptance tests.

c. Diagnose system failures; restore system operation, and repair items as appropriate. These personnel shall be generally capable of supporting engineering changes, preparing documentation, performing equipment modifications, and installing and testing new equipment.

d. Study operational problems and recommend solutions including preparing or revising operating, installation, or maintenance documents. Periodically review documentation for accuracy. Update preventative/corrective maintenance documentation/practices when needed. Prepare training material and equipment installation checklists.

e. Investigate reliability, maintainability and/or performance problems with existing equipment and provide recommendations and other necessary support to the SE&A (see Chapter XVI of this Specification) required to assist them in correction of such deficiencies.

f. In accordance with procedures addressed in relevant OCDs, support AUTEC's Configuration Management and Configuration/Drawing Control Systems requirements as relate to LAN/WAN systems/equipment. Provide/maintain complete and accurate engineering drawings; equipment technical (operating, maintenance, etc.) manuals; parts lists; and other requisite documentation. Prepare/submit relevant Modification Proposals (Mod Props), Equipment Addition/Deletion Notices, Requests for Document Change, Document Change Notices, engineering cost estimates, etc..

g. Arrange for manufacturer or other procured support of AUTEC's LAN/WAN resources on a case-by-case basis considering cost effectiveness and mission critical requirements as approved by NUWC.

h. Maintain, install, and design data and voice distribution frames according to the AT&T Systimax

Premises Distribution System specification and EIA/TIA -568 and -569 specifications.

10. The Contractor shall develop/maintain/deliver all required drawings, equipment manuals, studies, failure investigations/analysis, and other documents discussed above, and others as may be requested by NUWC, in a timely manner. Delivered documents shall be complete and accurate.

11. The Contractor shall adhere to all NUWC-directed safe guards against software virus attacks across AUTEC's LAN/WAN systems.

12. The Contractor shall maintain a database containing the terminal server port and Network Interface Card configurations/assignments in accordance with the procedures contained in OCD-(6.3)-00-XX.

13. The Contractor shall provide network administration services that include but are not limited to the following tasks: operation of network server computers and peripherals; installation and control of network-based software (see also Chapter VI(1) of this Specification); user accounting functions; and network-based fault isolation (hardware and/or software).

14. The Contractor shall be responsible for following appropriate security guidelines for classification, identification, marking, and safeguarding of classified IT resources as dictated by the subject matter. The Contractor shall maintain accurate records for data accountability purposes. Specific protection for IT system access, as well as administrative, operational, physical, and personnel controls are set forth in Chapter XXIII of this Specification, the current DoD Contract Security Classification Specification (DD Form 254) as appearing in Section J, Attachment (8), of this Contract, and appropriate Applicable Documents cited in paragraph F.

15. The Contractor shall submit all NUWC-required technical and administrative reports, described in Chapter XXV of this Specification, as pertain to support of AUTEC's LAN/WAN resources.

## D. WORKLOAD FACTORS

1. Support is required for correction of all LAN/WAN

problems during normal work hours, and on-call for the classified real-time system(s) during periods of scheduled operations outside of normal work hours.

2. All paper work (e.g. Purchase Requisitions, etc.) necessary to repair LAN/WAN resources shall be generated within one working day after problem discovery.

3. It is estimated that 10% of LAN/WAN resources shall need corrective maintenance per year. It is estimated that 40 personnel/equipment moves will be made in WPB per year and 120 personnel/equipment moves on Andros Island per year.

4. Fielding of trouble calls is required during normal work hours. All calls shall be acknowledged within one hour.

## E. KEY PERSONNEL/PERSONNEL QUALIFICATIONS

1. Key Personnel: None.

2. Personnel Qualifications:

a. Network Engineer(s) To successfully execute the responsibilities and tasks described, person(s) assigned should as a minimum:

1. Have a BS degree in Electrical/Electronic Engineering with five years of engineering experience.

2. Have two years direct experience in the field of information systems network engineering. Have excellent knowledge in the design, modification, troubleshooting, fault isolation, statistics analysis, and/or maintenance of Local Area Networks and Wide Area Networks, including Media Access Control and Data Link standards for IEEE 802.3 CSMA/CD, Ethernet version 2, FDDI, and ATM.

3. Have excellent knowledge and understanding of: the OSI seven layer reference model; the TCP/IP and Internet Official Protocol standards; network cabling methodologies and typologies; IBM PC compatible computers and their operating systems.

b. Network Technician(s) To successfully execute the responsibilities and tasks described, the person(s) assigned should

as a minimum:

1. Be a graduate of a formal two year course of study in electronics technology, or have equivalent military training, and five years direct experience operating/maintaining LAN systems.

2. Have excellent knowledge of LAN standards for installation and trouble shooting methods, and an understanding of the OSI seven layer reference model. Familiarity with the XNS and TCP/IP protocol suites is helpful.

## F. APPLICABLE DOCUMENTS

| | |
|---|---|
| DoDD 5200.28 | Security Requirements for Automated Information Systems |
| OCD-(6.3)-00-XX; | AUTEC Local Area Network (LAN) Maintenance and Operation |
| Other OCDs; | Relevant/Related OCDs as may be listed in Table XV-4 |
| APP 8-46G; | Computer Systems Acquisition, Maintenance and Control |

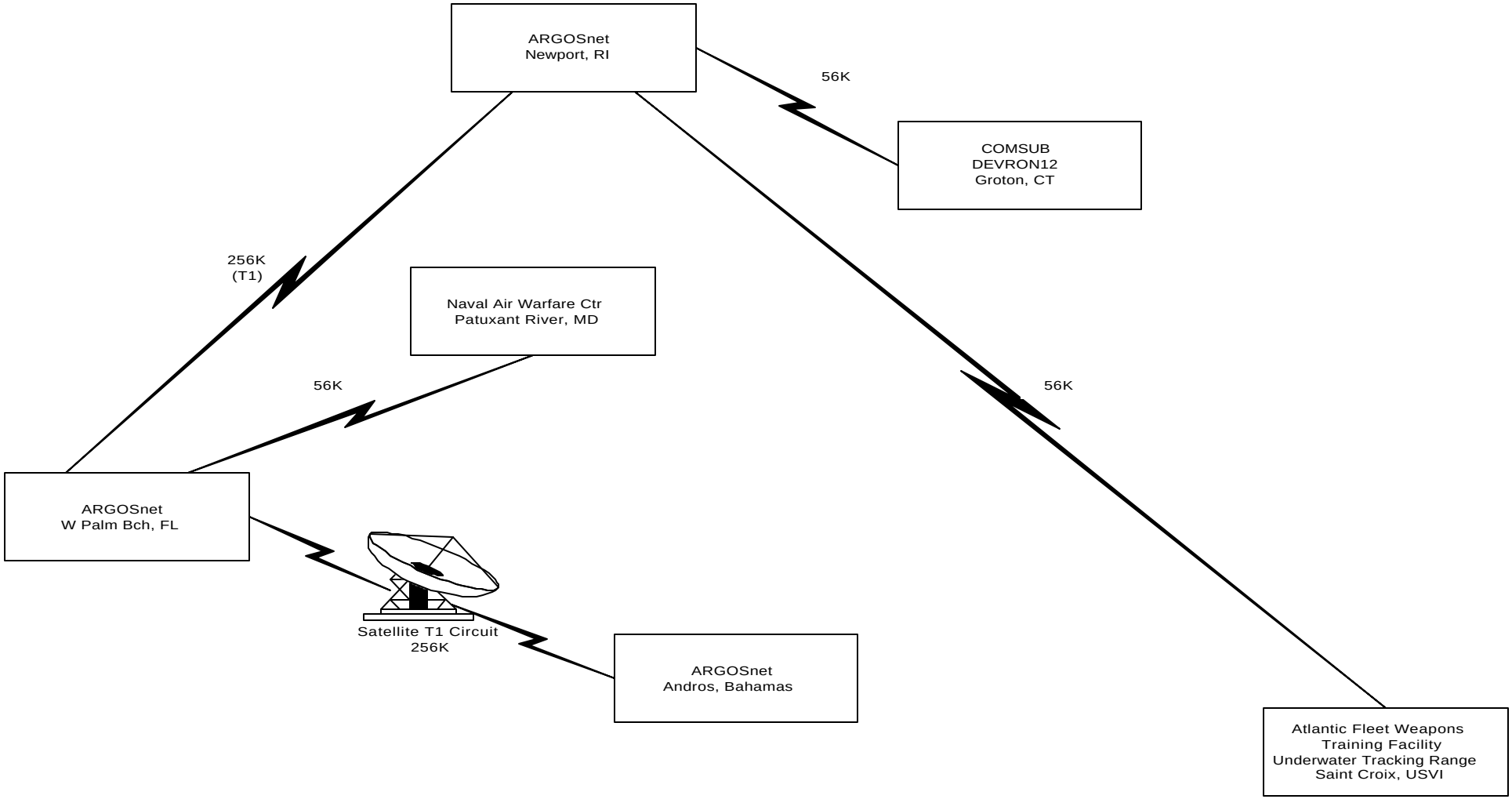


Figure VI-1
NUWC/AUTEC Cassified Networking Relationship

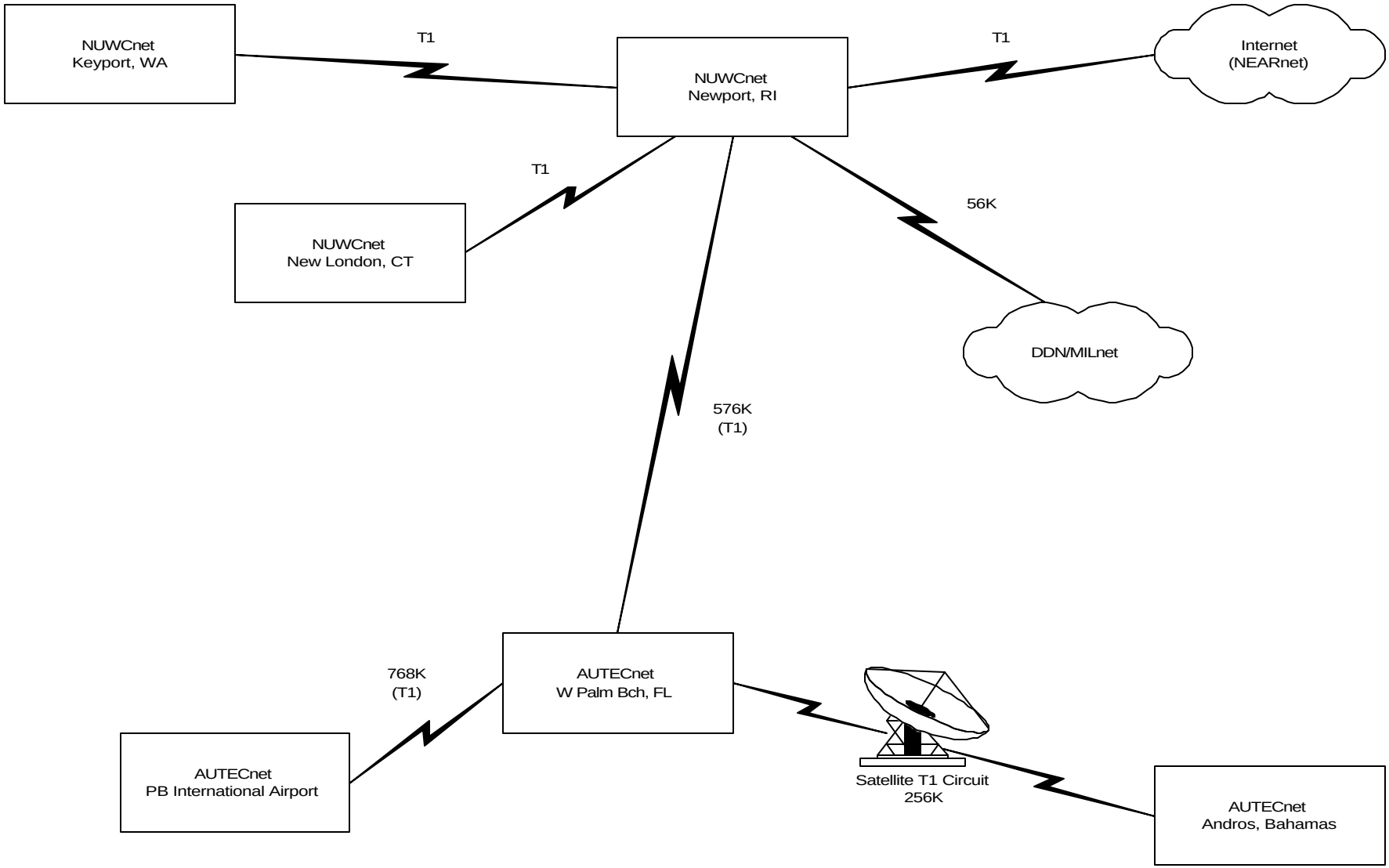


Figure VI-2
NUWC/AUTEC Unclassified Networking Relationship

Figure VI-3
Site 1 Classified LAN

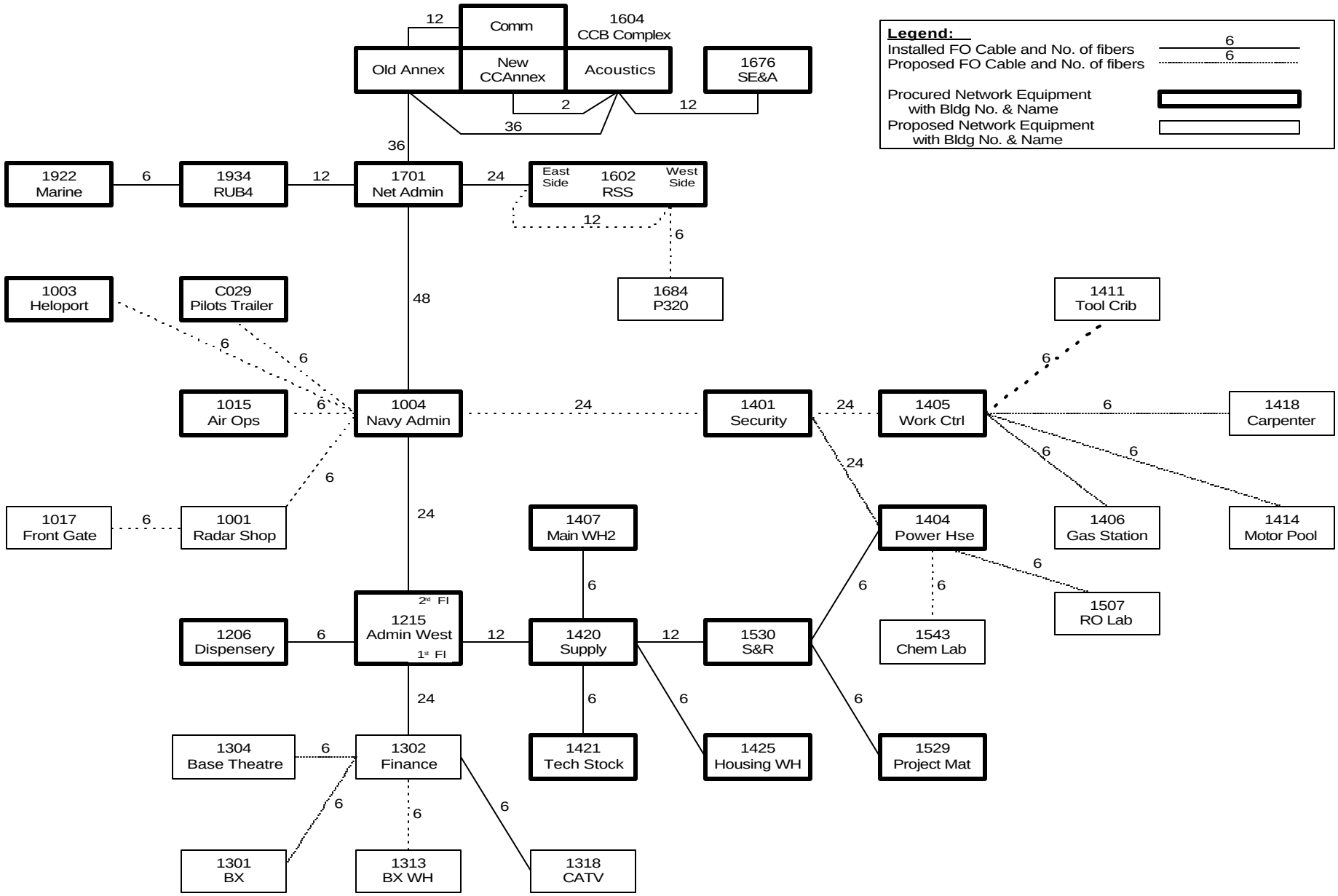


Figure VI-4
Planned Site 1 Unclassified Fiber Optic LAN

AUTEC LOCAL AREA NETWORK EQUIPMENT

UNCLASSIFIED:

| Equipment | Manufacturer | Model Number | Quantity WPB/ASD |
|---|---|---|---|
| Access/One Network Hub | UB Networks Inc. | ASE-7000 | 5/15 |
| Terminal Server | UB Networks Inc. | 2281A/NIU-180 | 8/10 |
| Terminal Server | UB Networks Inc. | 2286A/NIU-190 | 4/3 |
| Terminal Server | UB Networks Inc. | TS1841C/NIU-184 | 1/0 |
| Media Converter | UB Networks Inc. | ASP 841 | 0/4 |
| 10 BaseT Hub | Cabletron Sys Inc. | MRXI | 10/0 |
| 10 BaseT Hub | UB Networks Inc. | Access/Stax | 0/12 |
| Transceiver | UB Networks Inc. | 5208A | 11/0 |
| Transceiver | Cabletron Sys Inc. | ST-500 | 19/10 |
| Multiport Transceiver | UB Networks Inc. | 5218A | 1/0 |
| Multiport Transceiver | Cabletron Sys Inc. | MT-800 | 4/5 |
| PC Ethernet Card | UB Networks Inc. | PC2010/NIUpc | 2/0 |
| PC Ethernet Card | UB Networks Inc. | PC2030/3270NIUpc | 4/1 |
| PC Ethernet Card | UB Networks Inc. | PC4035EOTP | 80/25 |
| PC Ethernet Card | SMC | Elite 16T Ultra | 20/150 |
| Remote Ethernet Bridge | UB Networks Inc. | 2781A | 2/1 |
| Remote Ethernet Router | Cisco Systems | 2501 | 2/2 |
| Remote Ethernet Router | Cisco Systems | 2514 | 0/1 |
| Multiplexer, Statistical | Codex | 6003 INP | 0/2 |
| Multiplexer, Statistical | Black Box Corp. | Stat-64 | 0/10 |
| Multiplexer, Statistical | Digital Equipment Corp. | DFMO8-AA | 0/6 |
| Fiber Optic Mux | Honeywell | HFN9000 | 0/4 |
| Fiber Optic Mux | Canoga | CMX-832 | 0/8 |
| Modem, Limited Distance | Codex | 2123 series | 0/54 |
| Modem, Limited Distance | Black Box Corp. | LDM-MR128 | 0/10 |
| Modem, Limited Distance | Gandolf | 120 series | 0/20 |
| Netscout WAN Probe | Frontier Software Dev | 6050 | 1/0 |
| Netscout Ethernet Probe | Frontier Software Dev | 6010 | 1/1 |

Table VI-8

AUTEC LOCAL AREA NETWORK EQUIPMENT

CLASSIFIED:

| Equipment | Manufacturer | Model Number | Quantity WPB/ASD |
|---|---|---|---|
| Access/One | UB Networks Inc. | ASE-7000 | 1/1 |
| Media Converter | UB Networks Inc. | ASP 841 | 0/1 |
| Multiport Transceiver | Bicc Data Network | 1130 | 0/5 |
| Multiport Transceiver | Cabletron Sys Inc. | MT-800 | 1/2 |
| Network Hub | Cabletron Sys Inc. | MiniMAC | 0/1 |
| Online Network Hub | Chipcom | 17-slot | 0/2 |
| Online Network Hub | Chipcom | 6-slot | 0/2 |
| Transceiver | Canary | LE051A | 0/2 |
| Remote Ethernet Router | Cisco Systems | 2501 | 1/1 |
| Remote Ethernet Bridge | NAT | LM2000 | 1/1 |
| Local Ethernet Bridge | NAT | LM1000 | 0/1 |
| Ethernet Print Server | Emulux | P3000 | 0/4 |
| Terminal Server | Emulux | P4016M | 0/1 |
| Terminal Server | Xylogics | - | 0/3 |
| Fiber Optic Multiplexer | Honeywell | HFN9000 | 0/4 |
| Netscout WAN Probe | Frontier Software Dev | 6050 | 0/1 |
| Netscout Ethernet Probe | Frontier Software Dev | 6010 | 1/1 |

Table VI-8 (cont.)

# VII. RANGE DATA ACQUISITION SUPPORT SYSTEMS

## 1. COMMUNICATIONS

### A. GENERAL

Reliable and instantaneous communications between AUTEC's Headquarters in West Palm Beach and facilities on Andros Island, between the various Andros Island sites and facilities, with AUTEC's range craft, and with units operating on the various Andros Ranges are required to meet administrative, data collection and transfer, and operational safety needs. Functional overviews depicting the various operational and administrative communications subsystems are shown in Figures VII-1 and VII-2, respectively.

### B. DESCRIPTION

A representative list of AUTEC's communications equipment is provided in Table VII-1. Actual inventory is as provided by NUWC. A switching facility allows for interconnection of most compatible systems in order to allow flexibility, effectiveness, and efficiency in communications. Major AUTEC communications subsystems are discussed in the following paragraphs:

**West Palm Beach Communications System:** West Palm Beach communications are an integral part of the AUTEC Communications Systems. Equipments include an AT&T System 75 digital telephone system with lines between AUTEC Headquarters and the Contractor's Palm Beach International Airport facility, leased T-1 telephone lines, internal transmission lines, Local Area Network (LAN) lines, Aircraft Network, Emergency RF equipment, and PA speaker systems.

**Video Teleconferencing Centers (VTCs)**: AUTEC has two rollabout VTCs, one located in the West Palm Beach, FL, headquarters (Eclipse Model 8200, with associated accessories), and one at Site 1 on Andros Island (Eclipse Model 8100, with accessories). The VTC link between Andros Island and West Palm Beach utilizes 128kb of satellite bandwidth. The connection between West Palm Beach and NUWC Division Newport, RI, is via a 128kb portion of a T1 line.

**Satellite Communications (SATCOM) System:** The satellite communications system includes two earth stations located at West Palm Beach and Andros Island. The system utilizes a T-1 (1.544 Mbps) line for voice/data communications service to various networks. This system is bulk-encrypted for transmission only.

**Message Center:** A Message Center is operated at Site 1 on Andros Island. AUTEC's Andros Island Message Center is a Defense Message

Center AUTODIN Gateway Terminal, and AUTEC has been designated a Gateguard subscriber to the Naval Computer and Telecommunications Station, Key West, FL. Messages received from the Navy AUTODIN (Automatic Digital Network) system are routed through the Message Center. The Andros Message Center distributes incoming messages locally and/or to AUTEC's West Palm Beach Headquarters. All of AUTEC's outgoing message traffic, including that from West Palm Beach, is transmitted from the Andros Message Center. The system is secured by various COMSEC encryption devices.

**Andros Island Microwave System:** The digital microwave communications system provides critical voice and data circuits between Site 1 and downrange Sites 2, 3, and 4. The microwave system utilizes space diversity with hot standby and was designed to provide high (99.99%) availability. The system can be interfaced with the satellite communications link extending to CONUS.

The microwave system has expansion capability to 28 DS-1 trunks, however, the system is presently equipped with only 12. Waveguide pressurization equipment and a 48 VDC battery plant are located at each microwave site.

Data streams include in-water/in-air track data, various voice circuits, timing signals, inter-site and downrange relay voice communications, public address, and any special communications required by Range Users.

**Voice Communications:** Site 1 voice communications with vessels, aircraft, and other selected stations is provided through the use of HF, VHF, and UHF radio transceivers (or microwave-relayed through similar transceivers at the downrange sites). Recording of voice communications during test operations, by means of magnetic tape recorders, is standard AUTEC practice.

**Portable AUTEC Real-Time Graphic On-line System (PARGOS)**: PARGOS is an encrypted data link that allows for real-time range data to be displayed at remote locations such as aboard Range User vessels participating in tests. PARGOS consists of encrypted (KY58) transmission by a Silicon Graphic Inc. (SGI) workstation from a Real-Time Display Center, a Harris embedded-encryption (KY57) transceiver, a Harris data buffer, and an IBM-compatible portable computer running a DOS-based subset of the ARGOS graphic displays. (See also Chapter XII of this Specification).

**Andros Telephone and Paging Systems:** Andros Island is served by an AT&T Definity G3I Private Branch Automatic Exchange (PBAX) digital telephone switch which is capable of 400 trunks and 1600 extensions. The telephone system allows for selective direct dialing between all sites on

Andros and to CONUS. The Definity G3I telephone switch possesses a 6-port internal Automated Digital Information Exchange (AUDIX) system. The AUDIX system provides auto attendant service for the satellite lines to West Palm Beach. The AUDIX also provides for voice mail with up to 15 hours of storage that is divided amongst various departments. There is also a 4-port auto attendant system in place to provide call routing for incoming calls on the Bahamian Telecommunications Corporation (BATELCO) lines, but without voice mail capability. Andros communications also include both a Site 1 and downrange site PA system and a Site 1 radio-pager system. Defense Switched Network (DSN), Florida WATS, and FTS 2000 telephone services are available for use by designated Contractor personnel.

**VHF Portable Radios and Walkie-Talkies**: VHF portable transceivers are used for WSAT test support and for vehicular communications. Portable radios/Walkie-Talkies are used for Public Works, Security, and Fire Protection 2functions.

**Andros Ranges/Range User Teletype (TTY) Circuit:** An RF data circuit (SENNET) is used for secure communications between Site 1 and Range User units operating on the Andros Ranges.

**Emergency Vehicles**: AUTEC's emergency response vehicles are equipped with transceivers for dispatch/control purposes. In addition, crash/fire/rescue vehicles are equipped to communicate directly with the helicopters and fixed wing aircraft provided by the Contractor. See also Chapters XXIII and XXIV of this Specification.

**Continuing Education Satellite System:** This satellite system is used to improve the quality of life for individuals assigned to AUTEC's Andros Island facilities by allowing interested individuals to pursue degree programs, or to take specific college-level courses, offered through the AUTEC Recreation Association (ARA) (see Chapter XXVII of this Specification).

**Cable Television System:** Because AUTEC's Andros Island facilities are outside the transmitting range of CONUS television stations, a Cable Television System is used for receipt and distribution of commercial, public, and government television programming for the general AUTEC populace. An information channel is provided for the distribution of both live and taped local general and emergency material. See also Chapter XV(1) of this Specification.

## C. CONTRACTOR RESPONSIBILITIES

1. The Contractor shall maintain all of AUTEC's communications and communication systems equipment in an

operational status except during scheduled range maintenance periods authorized by NUWC. The Contractor shall ensure that routine preventative maintenance is conducted on a not-to-interfere basis with scheduled operational requirements. All communications equipment will be manned and operated in accordance with the AUTEC Schedule of Operations, published Operations Directives,Workload Factors given in paragraph D, Applicable Documents cited in paragraph F, and other requirements stated below. Special requirements may be tasked by NUWC Work Order or Letter of Direction.

2. The general approach to accomplishing AUTEC's communication systems needs is that routine day-to-day tasks shall be performed by the Contractor. Arrangements for manufacturer or other procured services to support occasional, extraordinary, or specialty requirements related to this work area shall be made by the Contractor on a case-by-case basis considering cost

effectiveness, schedule, or other requirements as approved by NUWC.

3. The Contractor shall maintain, check-out, calibrate, and operate all of AUTEC's Communications Systems equipment in accordance with the standards and practices established by applicable OCDs, locally prepared Operations Maintenance Instructions (OMIs), other documents cited in paragraph F, and/or as delineated in maintenance and operation manuals provided by the equipment manufacturers.

4. The Contractor shall abide by the AMS for preventative maintenance of all existing AUTEC communications equipment. Preventative maintenance of new equipment will be based on manufacturer-recommended procedures and/or new AMS procedures to be developed by the Contractor.

5. The general approach to corrective maintenance of AUTEC's communications equipment shall be to restore all equipment to operational status as quickly as possible by replacement of modules and sub-assemblies. The modules/sub-assemblies may then be repaired by either the Contractor or the manufacturer or others, whichever NUWC deems to be most cost effective.

6. The Contractor shall provide an adequate staff of persons qualified to perform the following tasks:

a. Develop and maintain an inventory of Government-provided consumables, expendables, and repair/spare parts for all communications equipment in accordance with the policies provided in Chapter XXI (1) of this Specification.

b. Provide technical support to Purchasing for procurement of communications system equipment including: specification writing; technical evaluation of proposals; cost review; quality review; technical qualification of sources; preparation of inspection and acceptance procedures; and conduct of acceptance tests.

c. Diagnose system failures; restore system operation, and repair items as appropriate. These personnel shall be generally capable of supporting engineering changes, preparing documentation, performing equipment modifications, and installing and testing new equipment.

d. Study operational problems and recommend solutions including preparing or revising operating, installation, or maintenance documents. Periodically review documentation for accuracy. Update

preventative/corrective maintenance documentation/practices when needed. Prepare training material and equipment installation checklists.

e. Investigate reliability, maintainability, and/or performance problems with existing equipment and provide recommendations and other necessary support to SE&A (see Chapter XVI of this Specification) as required to assist in the correction of such deficiencies.

f. In accordance with procedures addressed in relevant OCDs, support AUTEC's Configuration Management and Configuration/Drawing Control Systems requirements as relate to communications systems/equipment. Provide/maintain complete and accurate engineering drawings, equipment technical (operating, maintenance, etc.) manuals, parts lists, and other requisite documentation. Prepare/submit relevant Modification Proposals (Mod Props), Equipment Addition/Deletion Notices, Requests for Document Change, Document Change Notices, engineering cost estimates, etc..

g. Arrange for manufacturer or other procured support of communications equipment on a case-by-case basis considering cost effectiveness and mission critical requirements as approved by NUWC.

7. The Contractor shall develop/maintain/deliver all required drawings, equipment manuals, studies, failure investigations/analysis, and other documents discussed above, and others as may be requested by NUWC, in a timely manner. Delivered documents shall be complete and accurate.

8. The Contractor shall provide a Communications System Engineer at both AUTEC's West Palm Beach Headquarters and at Site 1 on Andros Island. These full-time engineers shall be responsible for meeting scheduled test requirements, and shall be qualified to perform and/or oversee the following tasks for communications system equipment:

a. Fault isolation.

b. Corrective actions.

c. System alignment/calibration.

d. New equipment installation and Operational Acceptance Testing.

e. Equipment modifications including pre-requisite modification proposals.

f. The conduct of special studies and preparation of technical reports regarding equipment performance and improvement.

g. Preparation and review of technical documentation.

h. Providing technical assistance to the Systems Engineering and Analysis group.

i. Providing NUWC Work Order support.

j. Providing technical interface with NUWC/other activities.

9. The Contractor shall provide both West Palm Beach and Andros Island communications representatives as may be required to support the Information Systems Coordinator/NUWC in matters relating to Automated Information Systems communications functions. Personnel shall provide support as required. See also Chapters VI(1) through (3) of this Specification.

10. Responsibilities for AUTEC's Message Center at Site 1 include, but are not limited, to the following:

a. The Contractor shall receive, prepare, and transmit Government and Contractor message traffic in accordance with approved U.S. Navy publications and procedures.

b. The Contractor shall receive, process, and distribute incoming message traffic in accordance with approved U.S. Navy publications and procedures.

c. The Contractor shall maintain Message Center file systems, update communications publications, and perform selected destruction of classified waste.

d. The Contractor shall prepare and distribute Frequency Usage Reports, and other such reports as required by the appropriate Navy authority.

e. The Contractor shall assure that all requirements cited in SECNAVINST 5239.2 (Series) for maintaining category III Defense Information Systems certification of AUTEC's AUTODIN Gateway Terminal are satisfied at all times.

f. The Contractor shall adhere to the requirements cited in NAVTELCOMINST 2010.4 (series) for procedures related to system interface, software control and management.

*g.* *- - - - - deleted - - - - -*

11. The Contractor shall provide personnel who are qualified to perform TSEC-nomenclatured COMSEC equipment installation, maintenance, and repair functions. Personnel who are so assigned must meet the NSA/CSS-approved training requirements specified by OPNAVINST 2221.3 (Series), and enclosure (1) thereto. The Contractor shall complete, and maintain up-to-date, a record of all COMSEC maintenance courses completed by each individual. Such records will be made available to NUWC upon request. NUWC will act as interface for all equipment controlled by the Electronic Key Management System (EKMS). The Contractor shall adhere to all applicable security regulations pertaining to access to COMSEC material, equipment, and information as defined in OPNAVINST 2221.5 (Series). See also Chapter XXIII of this Specification.

12. The Contractor shall collect data, maintain records (frequency allocation lists, equipment lists, traffic lists, etc.) and prepare/submit all communications activity reports required by OPNAV and NUWC. The Contractor shall respond promptly to any special requests for data/reports. An operating facilities report, per OPNAVINST 2010.3 (series), and a Frequency Usage Report, per OPNAVINST 2400.7 (series), will be submitted annually, on 1 August of each calendar year.

13. The Contractor shall adhere to the Electronic Industries Association and the Telecommunication Industry Association (EIA/TIA) -568, -569, and -570 series wiring standards (as applicable) for all projects.

14. The Contractor shall provide personnel capable of installing, removing, maintaining, and modifying instrumentation on AUTEC's 220 foot steel antenna towers.

15. As requested by NUWC, the Contractor shall verify VTC operation and site-to-site connectivity prior to scheduled usage. The Contractor shall provide training and technical assistance to VTC users as may be required.

16. The Contractor shall establish and maintain a domestic (e.g. US) satellite T-1 space segment and requisite FCC operator's license for the WPB/ASD SATCOM link.

17. The Contractor shall, when the SATCOM link is not operational, establish a STU-III connection with NCTAMSLANT, Key West, FL, utilizing BATELCO circuits, as an emergency backup for the satellite system. Similarly, the Contractor shall establish an emergency HF voice circuit between Site 1 on Andros Island, AUTEC's West Palm Beach Headquarters, and the Palm Beach County, FL, Emergency Management Facility during hurricane drills/alerts.

18. The Contractor shall, as requested by NUWC, seek the concurrence of appropriate authorities of the Government of the Bahamas and/or the U.S. for the use of radio frequencies, powers, and bandwidths for radio services, (including radar) not previously granted, for both new and temporary installations.

19. The Contractor shall administer the Andros PBAX telephone system in accordance with requirements contained in APP 8-11G. The Contractor shall collect reimbursement for the cost of any personal outgoing calls (collect incoming calls shall not be accepted) made through the Andros PBAX telephone system. Such reimbursements shall be returned to the Government and reported in the monthly Cost Control Report (see Chapters XXI(1) and XXV of this Specification).

20. The Contractor shall be responsible for following appropriate security guidelines for classification, identification, marking, and safeguarding of classified communications system resources, messages, etc. as dictated by the subject matter. The Contractor shall maintain accurate records for data accountability purposes. Specific requirements, including administrative, operational, physical, and personnel controls are set forth in Chapter XXIII of this Specification, the current DoD Contract Security Classification Specification (DD Form 254) as appearing in Section J, Attachment (8), of this Contract, and in appropriate Applicable Documents cited in paragraph F.

21. The Contractor shall submit all NUWC-required technical and administrative reports, described in Chapter XXV of this Specification, as pertain to support for AUTEC's Communications Systems.

## D. WORKLOAD FACTORS

1. AUTEC's West Palm Beach Headquarters and Andros Island telephone systems are to be operational 24 hours per day, 365 days per year. The West Palm Beach switchboard shall be manned by the Contractor during normal work hours. A telephone answering capability is to be provided when the switchboard is not manned.

The Contractor shall provide a means to manually assist persons making incoming/outgoing calls through the automated Andros Island telephone switch as backup to the system's AUDIX capability. Such assistance shall be available 24 hours per day, 365 days per year.

2. The AUTEC microwave, telephone, SATCOM, PA, PARGOS, encryption, and radio paging systems are to be specifically available 24 hours per day, 365 days per year.

3. Continuous monitoring and operation (24 hours per day, 365 days per year) of the Satellite Communications System and the Harbor Common Circuits (HF and VHF voice) (see Chapter XVIII of this Specification) at Site 1 are required. Other OCC radio circuits shall be monitored and operated during normal work hours or as required by NUWC.

4. AUTEC's Andros Island Message Center shall be manned and operated 24 hours per day, 365 days per year.

5. Non-mission essential communications systems such as the VTC, cable TV, and Continuing Education Satellite System shall be supported during normal work hours. Repairs shall be accomplished (system/equipment availability) by the end of the next work day.

6. The HF, VHF, and UHF radio transmitters and receivers shall be operational as required to support the AUTEC Schedule of Operations.

7. The Andros/Key West STU III BATELCO circuit and the emergency voice HF voice circuit must manned, 24 hours per day, during Satellite Communications System outages/hurricane drills/alerts, respectively.

8. A communications control center shall be manned and operated at Andros Island to monitor equipment performance,

provide corrective maintenance, and to provide overall communications support during normal work hours to support real-time test operations. During non-work hours (if there are no test operations) a duty technician shall be on call/stand-by.

*9.- - - - - deleted - - - - -*

## E. KEY PERSONNEL/PERSONNEL QUALIFICATIONS

1. Key Personnel:

a. Communication System Engineers:

1. Minimum Number Required: 2

2. Education: BS degree in Electronic Engineering with 5 years direct experience and increasing responsibilities, as described below.

OR

Be a graduate of a formal two year course of study in electronics, or have equivalent military training, with 10 years direct experience and increasing responsibilities, as described below.

3. Experience: Have direct experience and increasing responsibility, in the design, modification, and/or maintenance of digital and/or analog communications systems, to include a majority of the following:

(a) RF transmitter/receiver systems.

(b) Microwave data transmission systems.

(c) Satellite communication systems.

(d) Telephone switching systems.

(e) Data/voice encriptation systems.

4. Other: Have excellent knowledge of digital and analog circuit design and trouble shooting/fault isolation methodology. Good verbal and written communication skills are required.

2. Personnel Qualifications:

a. Communications System Technician(s) To successfully execute the responsibilities and tasks implied, the person(s) assigned should as a minimum:

1. Be a graduate of a formal two year course of study in electronics, or have equivalent military training.

2. Have 5 years experience and excellent knowledge of digital and analog circuit design and troubleshooting methods.

3. Have good verbal and written communications skills.

4. Person(s) assigned responsibility for the Andros PBAX system should have two years direct experience in maintaining/repairing/configuring such systems.

5. Person(s) assigned responsibility for RF transmitters/receivers, microwave communications systems, satellite communications systems, etc., should have two years direct experience in maintaining/repairing/configuring such equipment/systems.

## F. APPLICABLE DOCUMENTS

- - - - - - - - *deleted* - - - - - - - -

| | |
|---|---|
| SECNAVINST 5239.2 (Series) | Department of the Navy Automated Information Systems (AIS) Security Program |
| OPNAVINST 2010.3 (Series); | Communications Operating Facilities Report (OPNAV Report 2010-2); Submission of |

| | |
|---|---|
| OPNAVINST 2221.3 (Series); | Communications Security (COMSEC) Equipment Maintenance and Training |
| OPNAVINST 2221.5 (Series); | Release of Communications Security Material to U.S. Industrial Firms Under Contract to the U.S. Navy |
| OPNAVINST 2400.7 (Series); | Frequency Usage Report |
| OPNAVINST 2400.20 (Series); | Navy Management of the Radio Frequency Spectrum |
| OPNAVINST C 5510.93 (Series); | Navy Implementation of National Policy on Control of Compromising Emanations (U) |
| COMNAVCOMTELCOMINST 2010.4 (Series); | Naval Telecommunications System (NTS) Automated System Interface, Software Control and Management Procedures |
| Dept. of the Navy (DoN) Publication CMS-21; | CMS Policy and Procedures for Navy Tier 2 Electronic Key Management System |
| OCD-(07.1)-01-XX; | Secure Voice Recording During Test Operations |

- - - - - *deleted* - - - - -

| | |
|---|---|
| OCD-(07.1)-03-XX; | Secure Voice Circuit |
| OCD-(07.1)-04-XX; | Operation and Control of Cellular STU-III Stations |
| OCD-(07.1)-06-XX; | Assignment/Recording of Non-Secure Audio Channels During Test Operations |
| OCD-(07.1)-08-XX; | WSAT Communication System |
| OCD-(07.1)-13-XX; | Microwave System Alignment |
| OCD-(07.1)-17-XX; | VHF/UHF Transceiver Facility |

| | | |
|---|---|---|
| OCD-(07.1)-18-XX; | AUTEC Operational Intercom System | |
| OCD-(07.1)-19-XX; | ASD Naval Communications Center Operations | |
| OCD-(07.1)-21-XX; | AUTEC Antenna Installation | |
| OCD-(07.1)-22-XX; | Drafting Naval Messages | |
| OCD-(07.1)-25-XX; | Microwave Backup Communication | |
| OCD-(07.1)-26-XX; | Andros Radio Paging System | |
| Other OCDs; | Relevant/Related OCDs as may be listed in Table XV-4 | |
| APP 4-21G; | Mass Casualty Plan | |
| APP 8-11G; | Control and Use of the AUTEC Phone System | |
| APP 11-4G; | Hurricane Plan, CONUS, AUTEC | |
| APP 11-5G; | Hurricane Plan, Andros Ranges | |
| OMI 90-1; | Checkout and Alignment of the AUTEC Digital Microwave System | |
| EIA/TIA Standards; | No. 568. | Commercial Building Standard for Telecommunications Wiring |
| | No. 569. | Commercial Building Standard for Telecommunications and Pathways |
| | No. 570. | Residential and Light Commercial Building Standard for Telecommunications Wiring |

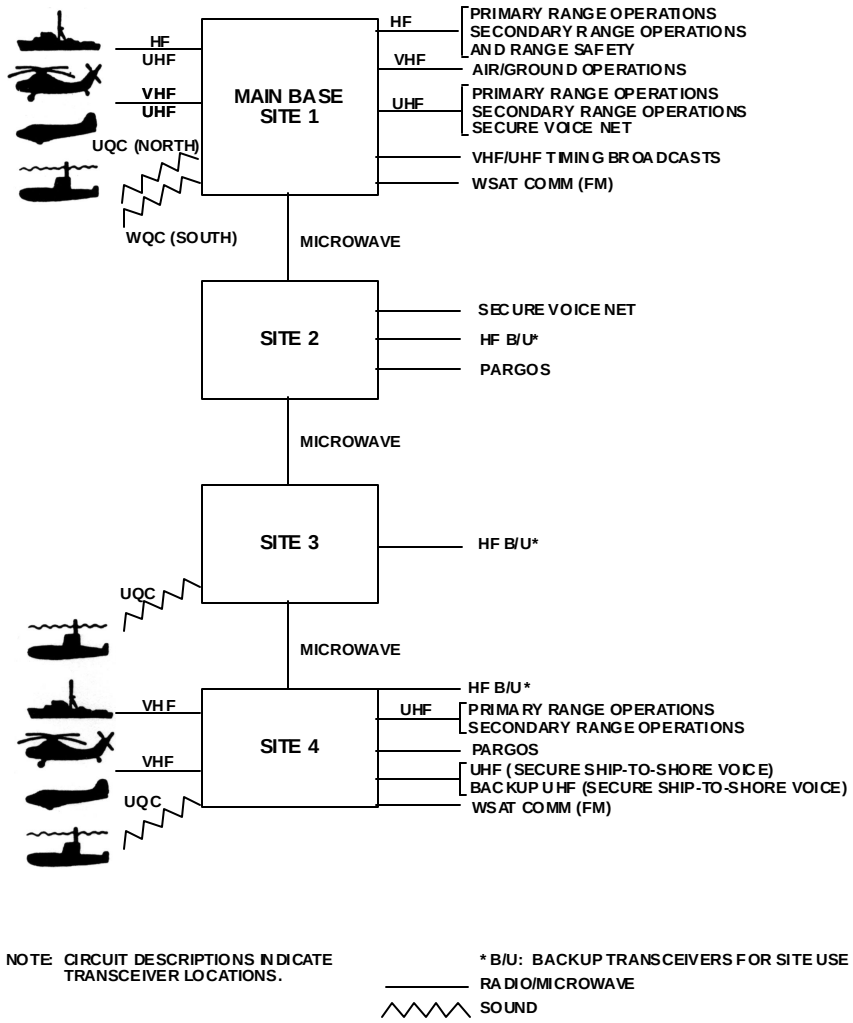


Figure VII-1
AUTEC Operational Communications

Figure VII-2
AUTEC Administrative Communications

## COMMUNICATIONS EQUIPMENT

| Equipment | Mfr | Model No. | Qty |
|---|---|---|---|
| AUTEC HEADQUARTERS, WEST PALM BEACH, FL | | | |
| Analyzer, Spectrum | HP | 8595E | 1 |
| Counter, Frequency | HP | - | 1 |
| Test Set, Telephone | HP | - | 1 |
| Multimeter, Digital | JF | - | 1 |
| Oscilloscope, 100 MHZ | Kikusui | - | 1 |
| Power Supply | Tripplet | - | 1 |
| Radio, Transceiver | Kenwood | - | 2 |
| T-1 Satellite Multiplexer | Timeplex | - | 3 |
| Enhanced Voice Modules | Timeplex | EVM | 8 |
| Common Control Cards | Timeplex | NCL | 6 |
| - - - - - - - - *deleted* - - - - - - - - | | | |
| Inter-Machine Link | Timeplex | ICC 2 | 12 |
| Telephone System | AT&T | - | 1 |
| Tone Detector Card | AT&T | - | 4 |
| Analog Line Card | AT&T | - | 44 |
| Trunk Cards | AT&T | - | 13 |
| Digital Line Cards | AT&T | - | 5 |
| Common Control Cards | AT&T | - | 8 |
| Telephones | Panasonic | - | 200 |
| Analog Telephones | AT&T | - | 125 |
| Digital Telephones | AT&T | - | 17 |
| Secure Encryption Devices | - | KG-194 | 3 |
| Secure Encryption Devices | - | KG-84A/84C | 4 |
| Secure Encryption Devices | Mytronics | KIV-7HS | 7 |
| Telephone System | Panasonic | KX-T12320 | 1 |
| Announcing System | - | - | 1 |
| T-1 Multiplexer | Telco Sys | 24FC19 | 3 |
| Common Control Cards | Telco Sys | - | 12 |
| VQL Cards | Telco Sys | - | 24 |
| Data Interface Cards | Telco Sys | - | 4 |
| FXO/FXS Cards | Telabs | - | 24 |
| Communications Test Set | Phoenix | 5500A | 1 |
| Transmission Test Set | HP | 5934A | 1 |
| Earth Station Antenna | - | 9M | 1 |
| Satellite Modems | - | - | 2 |
| Terminal Electronics | - | - | 2 |
| UPS - ISKYA | - | - | 1 |

Table VII-1

| | | | |
|---|---|---|---|
| Voice Mail | Octel | 200/300 | 1 |
| Fax | - | - | 12 |

Table VII-1

COMMUNICATIONS EQUIPMENT

| Equipment | Mfr | Model No. | Qty |
|---|---|---|---|
| Voice Over IP | MultiTech Sys | MVP-200 | 1 |
| ISDM | Black Box | TA128K | 5 |
| Video Tele-Conferencing System | VTEL | Eclipse | 1 |
| Fiber Optic Modems | Rad Data Communications | F0M-40 | 4 |
| Voice Signaling Converters | Rad Data Communications | VSC | 2 |
| Cellular Telephones | Nextel | I1000Plus | 13 |
| Cellular Telephones | Nokia | 6162 | 2 |
| Cellular Telephones | Ericcson | DH318 | 7 |
| Cellular Telephones | Ericcson | LX588 | 1 |
| Data Comm Analyzer | TTC | Firebird 6600A | 1 |
| UPS | BestPower Tech | Fortress L13KLX | 2 |

Table VII-1 (cont.)

COMMUNICATIONS EQUIPMENT

| Equipment | Mfr | Model No. | Qty |
|---|---|---|---|
| ANDROS ISLAND, CC BUILDING (SITE 1) | | | |
| Secure Telephones, Cellular | AT&T | STU-III | 2 |
| Telemetry Master, Microwave | ALCATEL | TSM-2500 | 1 |
| Pager/Beeper | MOTOROLA | Keynote | 60 |
| Receivers, Radio | Watkins-Johnson | - | 24 |
| Receivers, Radio | Drake | R8 | 8 |
| Receiver, Surveillance | ICOM | - | 1 |
| Equipment Frame W P Supplies | Watkins-Johnson | - | 3 |
| Radio Set, Transmitters | Rockwell/Collins | AN/GRC-171A | 3 |
| Radio Pagers | Page Boy | 2 | 2 |
| Radios, Portable | Motorola | SABER | 4 |
| Radio, Transceiver | Kenwood | TS-940 | 1 |
| Transceivers | Comco | 727 | 2 |
| Antenna Couplers | Pitometer | - | 2 |
| SENNET Computer | Zenith | Z386 | 2 |
| Converter/Keyers (HF) | - | CU3510B | 4 |
| Secure Encryption Devices | - | KG-84 A/C | 14 |
| Secure Encryption Devices | - | KY-58 | 8 |
| - - - - - - - - *deleted* - - - - - - - - - | | | |
| Secure Encryption Devices | - | KG-194 | 8 |
| Secure Encryption Devices | - | KYV-5 | 2 |
| - - - - - - - - *deleted* - - - - - - - - | | | |
| Power Supply/KG-84 | - | - | 1 |
| Power Supplies (Secure Voice) | - | - | 4 |
| Transmit & Receive Line Amps (Secure Voice) | - | - | 44 |
| Power Supply for Line Amps (Secure Voice) | - | - | 2 |
| Patch Panel (Secure Voice) | - | - | 1 |
| Sidetone Amps for Patch Panel (Secure Voice) | - | - 24 | |
| Line and RCV Amps (Secure Voice) | - | - | 12 |
| Station Matrices (Secure Voice) | - | - | 6 |
| Secure Station/Handsets (Secure Voice) | - | - | 8 |
| Intercom System (AOIS) (Clear Voice) | Clear-Comm | Matrix Plus II | 1 |
| Satellite Multiplexer | Timeplex | LINK 2/+ | 1 |
| - - - - - - - - *deleted* - - - - - - - - | | | |
| - - - - - - - - *deleted* - - - - - - - - | | | |
| AOIS Intercom Stations | Clear-Comm | ICS-2002 | 39 |

Table VII-1 (cont.)

| | | | |
|---|---|---|---|
| AOIS Intercom Expansion Panels | Clear-Comm | XP-22 | 2 |
| Tone Interrupt Monitor | - | - 1 | |

Table VII-1 (cont.)

COMMUNICATIONS EQUIPMENT

| Equipment | Mfr | Model No. | Qty |
|---|---|---|---|
| - - - - - - - - *deleted* - - - - - - - - | | | |
| Recorder/Reproducer | Dictaphone | Guardian 31210-024 | 1 |
| - - - - - - - - *deleted* - - - - - - - - | | | |
| - - - - - - - - *deleted* - - - - - - - - | | | |
| Satellite Modems | EF Data | SDM-650 | 2 |
| - - - - - - - - *deleted* - - - - - - - - | | | |
| Secure Voice Recorder/Reproducer | Magnasync | - | 1 |
| Fibre Optic Modems | RAD | FOM-40 | 6 |
| Satellite Modem Switch | EF Data | SMS-651 | 1 |
| Satellite System Interface Unit | EF Data | SIU-16 | 1 |

Table VII-1 (cont.)

COMMUNICATIONS EQUIPMENT

| Equipment | Mfr | Model No. | Qty |
|---|---|---|---|
| VHF Transceivers | Rockwell/Collins | GRC-211 | 2 |
| VHF Transceiver | Harris | PRC-117B | 1 |
| UHF Transceiver | Rockwell/Collins | GRC-171 | 1 |
| HF Transceivers-Remote Control | Sunrise | - | 2 |
| VHF Transmitters | Motorola | MICOR | 2 |
| VHF Transceivers | General Electric | MASTR II | 3 |
| Inverters Solid State | Abacuss | - | 3 |
| Microwave System | | | |
| 1. Terminal | Alcatel | MDR-5608 | 1 |
| 2. Common Equipment | Alcatel | DMX-3003N | 1 |
| 3. Mulitplexer | Timeplex | LINK 2/+ | 1 |
| 4. Dehydrators | Andrew | 1920A | 2 |
| Cassette Players | Marantz | - | 3 |
| Satellite Transceivers | - | AN/WSC-3 | 2 |
| P.A. Amplifier | Bogen | - | 1 |
| Generic Front-End Control Processor | - | - | 1 |
| ANDROS ISLAND TELEPHONE CENTRAL OFFICE (SITE 1): | | | |
| | - - - - - - - - *deleted* - - - - - - - - | | |
| Telephone Switch (EPABX) | AT&T | Difinity G31 | 1 |
| Call Accounting Computer | COMPUADD | 386 | 1 |
| Auto Attendant Computer | AT&T | - | 1 |
| ANDROS ISLAND UHF/VHF BUILDING (SITE 1): | | | |
| | - - - - - - - - *deleted* - - - - - - - - | | |
| | - - - - - - - - *deleted* - - - - - - - - | | |
| | - - - - - - - - *deleted* - - - - - - - - | | |
| | - - - - - - - - *deleted* - - - - - - - - | | |
| | - - - - - - - - *deleted* - - - - - - - - | | |
| Surveillance Receiver | Yeasu | - | 1 |
| ANDROS ISLAND HF BUILDING (SITE 1): | | | |
| HF Transceivers | Kenwood | 940S/B | 3 |
| Linear Amplifiers | Henry | - | 3 |
| | - - - - - - - - *deleted* - - - - - - - - | | |
| HF Transceivers | Sunrise | - | 2 |

Table VII-1 (cont.)

## COMMUNICATIONS EQUIPMENT

| Equipment | Mfr | Model No. | Qty |
|---|---|---|---|
| ANDROS ISLAND AIR OPERATIONS (SITE 1): | | | |
| Transceiver | Comco | 727 | 1 |
| P.A. Amplifier | Realistic | MPA 20 | 1 |
| ANDROS ISLAND SATELLITE EARTH STATION COMPOUND (SITE 1): | | | |
| Satellite Equipment Shelter | VFP Inc. | VFP-1563 | 1 |
| Antenna, Satellite 9M | Andrew | ESA 9.1 | 1 |
| Power Amp, Solid State | MAXTECH | PCD-6025 | 3 |
| Up Converters | LNR | UC6L-D4 | 2 |
| Down Converters | LNR | DC4L-D4 | 2 |
| Up Converter Switch | LNR | UCS-1 | 1 |
| Down Converter Switch | LNR | DCS-1 | 1 |
| UPS | DELTEC | - | 1 |
| Dehydrator | GAST | - | 1 |
| Amplifiers, Low Noise | Kaman | RF3000 | 2 |

Table VII-1 (cont.)

## COMMUNICATIONS EQUIPMENT

| Equipment | Mfr | Model No. | Qty |
|---|---|---|---|
| ANDROS ISLAND HELIPORT (SITE 1): | | | |
| UHF Transceiver w/Remote | - | AN/ARC-159 | 1 |
| VHF Transceiver | Motorola | Flexar | 1 |
| Transceiver | Comco | 727 | 1 |
| P.A. Amplifier | Realistic | MPA 20 | 1 |
| VHF Handheld Transceivers | Motorola | HT-90 | 3 |
| AOIS Intercom Station | Clear-Comm | ICS-2002 | 1 |
| HEAD END BUILDING (FOR CABLE TELEVISION SYSTEM) (SITE 1): | | | |
| - - - - - *deleted* - - - - - | | | |
| DSS Satellite Dishes, 24” | Generic | - | 4 |
| DSS Satellite Receivers | Dish Network | - | 38 |
| 1500 Drop Television Unit | Sony | - | 1 |
| Signal Processors | - | - | 2 |
| Modulators, CATV | - | - | 38 |
| Modulators, FM | - | - | 6 |
| Line Amplifiers | - | - | 16 |
| ADMIN EAST BUILDING (FOR CONTINUING EDUCATION SATELLITE SYSTEM (SITE 1): | | | |
| Satellite Dish | Scientific Atlanta | - | 1 |
| Subscriber Unit | NTU 001 | | 1 |
| Modulators | Drake | VM2310 | 3 |
| Audio Interface Unit | A.T. Products | SSD-5 SE | 2 |
| ANDROS ISLAND OTHER (SITE 1): | | | |
| Telephones | AT&T/Panasonic | - | 1000 |
| P.A. Amplifiers (Base Page) | Realistic | MPA 20 | 11 |
| P.A. Amplifiers (Base Page) | Bogen | - | 3 |
| VHF Transceivers (Base Station) | Motorola | - | 3 |
| VHF Transceiver (Beeper Page) | Motorola | - | 1 |
| Portable Transceivers (Public Works) | Motorola | Saber | 10 |
| Portable Transceivers (Security) | Motorola | Saber | 15 |
| Portable Transceivers (Security) | - | HT-90 | 5 |
| Portable Transceivers (Security) | - | MT-500 | 4 |
| Portable Transceivers (Public Works) | Motorola | HT-100 | 10 |

Table VII-1 (cont.)

| | | | |
|---|---|---|---|
| Portable Transceivers (Safety/Environ) | Motorola | HT-100 | 8 |
| AOIS Intercom Stations | Clear-Comm | ICS-2002 | 2 |

<u>ANDROS ISLAND (ALL SITES)</u>:

| | | | |
|---|---|---|---|
| Antennas (Total Count) | Various | - | 158 |

Table VII-1 (cont.)

## COMMUNICATIONS EQUIPMENT

| Equipment | Mfr | Model No. | Qty |
|---|---|---|---|
| ANDROS ISLAND (SITE 2): | | | |
| Radio, Transceiver | Kenwood | T54305 | 1 |
| VHF Transceivers | Kenwood | - | 2 |
| RF Packet Modem | Kantronics | KPC-3 | 1 |
| Fibre Optic Modems | RAD | FOM-40 | 2 |
| Public Address Amplifier | Realistic | HPA2C | 1 |
| Microwave System | | | |
| 1. Terminals | ALCATEL | MDR-5608 | 2 |
| 2. Common Equipment | ALCATEL | RDI-3104e | 1 |
| 3. Multiplexer | TIMEPLEX | LINK 2/+ | 1 |
| 4. Dehydrator | Andrews | 1920A | 1 |
| Sub-cycle Ringer | Loran | - | 1 |
| AOIS Intercom Stations | Clear-Comm | ICS-2002 | 4 |
| Batteries | Gould | MAX 225 | 12 |
| Transmitters | - | GRT-22 | 3 |
| VHF Transceiver | ICOM | - | 1 |
| Dish, “c”-Band | - | - | 2 |
| DSS Satellite Dishes, 24” | Generic | - | 2 |
| Receivers, CATV | - | - | 2 |
| DSS Satellite Receivers | Dish Network | - | 8 |
| Videocypher Units, CATV | - | - | 2 |
| Radios, Transceiver | Motorola | URC-200 | 6 |
| Power Amplifiers | - | - | 6 |
| PARGOS Transceiver | Harris | PRC-117B | 1 |
| PARGOS Amplifier | Harris | AN 7256/VRC-94(V) | 1 |
| PARGOS Power Supply | Harris | PP-7793/VRC-94(V) | 1 |
| UHF Transceivers | General Electric | MASTER II | 2 |
| UHF Transceiver | MIDLAND | 70-1336A/B | 1 |
| ANDROS ISLAND (SITE 3): | | | |
| VHF, Transceiver | ICOM | - | 1 |
| Dish, “c”-Band | - | - | 2 |
| DSS Satellite Dishes, 24” | Generic | - | 5 |
| Receivers, CATV | - | - | 2 |
| DSS Satellite Receivers | Dish Network | - | 6 |
| Videocypher Units, CATV | - | - | 2 |
| Public Address Amplifier | Realistic | MPA20 | 1 |

Table VII-1 (cont.)

| | | | |
|---|---|---|---|
| Fiber Optic Data Transmission System | Math Assoc. | - | 1 |

Table VII-1 (cont.)

## COMMUNICATIONS EQUIPMENT

| Equipment | Mfr | Model No. | Qty |
|---|---|---|---|
| Microwave System | | | |
| 1. Terminals | ALCATEL | MDR-5608 | 1 |
| 2. Common Equipment | ALCATEL | RDI-3104e | 1 |
| 3. Multiplexer | TIMEPLEX | LINK 2/+ | 1 |
| 4. Dehydrator | Andrews | 1920A | 1 |
| Subcycle Ringer | Loran | - | 1 |
| HF Transceiver | Kenwood | T54305 | 1 |
| Fibre Optic Modem | RAD | FOM-40 | 1 |

Table VII-1 (cont.)

## COMMUNICATIONS EQUIPMENT

| Equipment | Mfr | Model No. | Qty |
|---|---|---|---|
| AOIS Intercom Stations | Clear-Comm | ICS-2002 | 4 |
| Batteries | Gould | MAX 225 | 12 |
| ANDROS ISLAND (SITE 4): | | | |
| Radio, Transceiver | - | AN/GRC-211 | 1 |
| Radio, Transceiver | - | AN/GRC-171 | 1 |
| Base Station (Radio) | Motorola | MHB-114 | 1 |
| Radio, Transceiver | Kenwood | T54305 | 1 |
| Radio, Transceiver | - | WSC/3 | 1 |
| Radios, Receiver (VHF) | ICOM/Kenwood | - | 3 |
| Public Address Amplifier | Realistic | MPA20 | 1 |
| Microwave System | | | |
| 1. Terminal | ALCATEL | MDR-5608 | 1 |
| 2. Common Equipment | ALCATEL | DMX-3003N | 1 |
| 3. Multiplexer | TIMEPLEX | LINK 2/+ | 1 |
| 4. Dehydrator | Andrews | 1920A | 1 |
| Sub-cycle Ringer | Loran | - | 1 |
| AOIS Intercom Stations | Clear-Comm | ICS-2002 | 3 |
| Batteries | Gould | MAX 255 | 12 |
| Dish, “c”-Band | - | - | 2 |
| DSS Satellite Dishes, 24” | Generic | - | 5 |
| Receivers, CATV | - | - | 2 |
| DSS Satellite Receivers | Dish Network | - | 6 |
| Videocyphers, CATV | - | - | 2 |
| Fibre Optic Modem | RAD | FOM-40 | 1 |

Table VII-1 (cont.)

# VII. RANGE DATA ACQUISITION SUPPORT SYSTEMS (CONT.)

## 2. TIMING SYSTEM

### A. GENERAL

The AUTEC Timing System (ATS) and AUTEC Sub-central Timing System (ASTS) provide AUTEC Tracking Instrumentation and Data Handling systems with precise time and frequency signals for coherent data collection. Time synchronization and frequency measurement are traceable to the U.S. Naval Observatory through the Global Positioning System (GPS) satellites. The ATS and ASTS are synchronized to within one microsecond of Universal Time, Coordinated (UTC). A representative list of AUTEC's timing equipment is contained in Table VII-2. Actual inventory is as provided by NUWC.

### B. DESCRIPTION

#### 1. ATS/ASTS:

The ATS, located in the CCB at Site 1 is comprised of two independent systems that provide timing signals to a common distribution chassis. Each system includes a Cesium Frequency Standard with a typical stability of $1X10^{-12}$ parts per month or better to maintain time synchronization with UTC in the event loss of GPS has occurred. All timing signals are buffered and retransmitted to external tracking and data collection systems by the distribution chassis. See also Chapter XIII(1) of this Specification regarding reference timing signals for use in calibrating electronic test equipment.

- - - - - *deleted* - - - - -

The ASTS at downrange Sites 2, 3, 4, and WPB are independent systems that automatically synchronize to within 1 microsecond of UTC using GPS when power is applied. IRIG-B AC signals are sent to Site 1 from the ASTS at Sites 2, 3, and 4 for monitoring of clock performance and accuracy. Control and monitoring of these clocks is done from Site 1 via an RS-422 asynchronous serial data link. The clock in WPB is currently not monitored at Site 1. All ASTS except WPB operate from DC power provided by the microwave communications systems backup battery circuit permitting continuous operation. The WPB ASTS operates from standard commercially available AC power and shall be operated on a case by case basis.

ATS can generate simultaneous pulse trains from 1 pulse per minute to 100,000 pulses per second in programmable decade steps. The system can also

generate output sine waves at 1 and 10 $kH_z$.

RF transmission of time code signals can be provided upon request on 141.0 MHz FM and 318.0 MHz AM. Compatible receivers for remote site installation and reception of the transmitted RF time codes are available to satisfy any Range User requirements.

Four Rubidium Frequency Standards (oscillators) are maintained in the Timing Area to support Range User and in-house tests having remote timing requirements. Refer to Figure VII-3 for a block diagram of the ATS and ASTS.

2. **Portable Timing Equipment:**

**a. Time Code Generators (TCGs)**:

AUTEC has four portable Time Code Generators (TCGs) for installation aboard test vessels or wherever remote time and/or timing station signals are required. These units can be synchronized from an externally transmitted IRIG-B time code signal (i.e., RF, GPS, etc.) and generate IRIG-B time codes (AC and DC), and fixed pulse rates of 1, 1K, and 1M pulses per second at TTL logic levels. Either the external oven-controlled crystal oscillator or an external 1 MHz clock signal may be used as a frequency source. They display Time-of-Day or time offset, in microseconds, between the unit's time and an external IRIG-B time code signal.

**b. Data Gathering System Synchronizer (DGSS):**

AUTEC has five portable Data Gathering System Synchronizers (DGSS) for installation aboard test vessels or wherever visual display of Time-of-Day and pulse rates of 1, 100K, 1M pulses per second as well as 1 pulse per minute at TTL logic levels are required. The 1 pulse per minute is also provided at a non-standard 15 Volt logic level. These synchronizers use a crystal oscillator as a frequency source and must be synchronized at Site 1 Central Timing prior to installation at a remote location. Their primary function is to provide a 1 pulse per minute output signal at a non-standard logic level for synchronizing weapon fire control systems on board US and UK submarines.

**c. GPS Portable Receivers:**

AUTEC has five portable GPS Timing Receivers that provide IRIG-B Time Code, 1 pps, and 1 kpps outputs as well as one

programmable output for other decade rates up to 1 Mpps. These receivers require standard commercial 120 VAC or 12-38 VDC power for operation.

**d. IRIG-B Time Code Receivers:**

AUTEC has four VHF-FM, and two UHF-AM receivers utilized for receiving IRIG-B time code signals transmitted from Site 1. The output of these receivers is used to synchronize remote timing stations. All these receivers operate on standard commercial 120 VAC power.

## C. CONTRACTOR RESPONSIBILITIES

1. The Contractor shall maintain all Timing System equipment in an operational status (with the exception of the WPB ASTS which need be operational only when so specified by the AUTEC Schedule of Operations or otherwise requested by NUWC) except during routine maintenance periods scheduled by NUWC. All Timing System instrumentation shall be manned and operated in accordance with the AUTEC Schedule of Operations, published Operations Directives, workload factors given in paragraph D, Applicable Documents cited in paragraph F, and other requirements stated below. Special requirements may be tasked by NUWC Work Order or Letter of Direction.

2. The general approach to accomplishing AUTEC's timing systems needs is that routine day-to-day tasks shall be performed by the Contractor. Arrangements for manufacturer or other procured services to support occasional, extraordinary, or specialty requirements related to this work area shall be made by the Contractor on a case-by-case basis considering cost effectiveness, schedule, or other requirements as approved by NUWC.

3. The Contractor shall maintain, check-out, calibrate, and operate all of AUTEC's timing systems/equipment in accordance with the standards and procedures established by applicable OCDs and/or as delineated in maintenance and operation manuals provided by equipment manufacturers.

4. The Contractor shall abide by the AMS for preventative maintenance of all existing AUTEC timing systems/equipment. Maintenance of new equipment will be based on manufacturer-recommended procedures and/or new AMS procedures to be developed by the Contractor.

5. The general approach to corrective maintenance of AUTEC's timing systems/equipment shall be to restore all mission-essential equipment to operational status as quickly as possible by

replacement of modules and sub-assemblies. The modules/subassemblies may then be repaired by either the Contractor or the manufacturer or others, whichever NUWC deems to be most cost effective.

6. The Contractor shall provide an adequate staff of persons qualified to perform the following tasks:

a. Develop and maintain an inventory of Government provided consumables, expendables, and repair/spare parts for all timing systems/equipment in accordance with the policies provided in Chapter XXI(1) of this Specification.

b. Provide technical support to Purchasing for procurement of timing systems/equipment including: specification writing; technical evaluation of proposals; cost review; quality review; technical qualification of sources; preparation of inspection and acceptance procedures; and conduct of acceptance test.

c. Diagnose system failures; restore system operation; and repair items as appropriate. These personnel shall generally be capable of supporting engineering changes, preparing documentation, performing equipment modifications, and installing and testing new equipment.

d. Study operational problems and recommend solutions including preparing or revising operating, installation, or maintenance documents. Periodically review documentation for accuracy. Update preventative/corrective maintenance documentation/practices when needed. Prepare training materials and equipment installation checklists.

e. Investigate reliability, maintainability and/or performance problems with existing equipment and provide support to SE&A (see Chapter XVI of this Specification) as required to assist in the correction of such deficiencies.

f. In accordance with procedures addressed in relevant OCDs, support AUTEC's Configuration Management and Configuration/Drawing Control Systems requirements as relate to timing systems/equipment. Provide/maintain complete and

accurate engineering drawings; equipment technical (operating, maintenance, etc.) manuals; parts

lists; and other requisite documentation. Prepare/submit relevant Modification Proposals (Mod Props), Equipment Addition/Deletion Notices, Requests for Document Change, Document Change Notices, engineering cost estimates, etc.

g. Arrange for manufacturer or other procured support of timing systems/equipment on a case-by-case basis considering cost effectiveness and mission critical requirements as approved by NUWC.

h. The Contractor shall maintain an accurate, up to date record of all atomic frequency standard maintenance actions, and shall provide a report to NUWC delineating Cesium frequency standard performance when so requested.

7. The Contractor shall develop/maintain/deliver all required drawings, equipment manuals, studies, failure investigations/analysis, and other documents discussed above, and others as may be requested by NUWC, in a timely manner. Delivered documents shall be complete and accurate.

8. The Contractor shall provide a Timing System Engineer. This full-time engineer, assisted by technicians and other support personnel, shall be responsible for meeting scheduled test requirements, and shall be qualified to perform and/or oversee the following tasks for timing system equipment:

a. Fault isolation.

b. Corrective actions.

c. System alignment/calibration.

d. New equipment installation and operational acceptance testing.

e. Equipment modifications including pre-requisite modification proposals.

f. The conduct of special studies and preparation of technical reports regarding equipment performance and improvement.

g. Preparation and review of technical documentation.

h. Providing technical assistance to Systems Engineering and Analysis.

i. Providing NUWC Work Order support.

j. Providing technical interface with NUWC/other activities.

9. The Contractor shall provide personnel qualified to install and operate all portable timing equipment as required by the AUTEC Schedule of Operations, published Operations Directives.

10. The Contractor shall keep all Timing Systems synchronized to UTC within 1 microsecond except during approved periods of downtime or scheduled maintenance.

11. The Contractor shall submit all NUWC-required technical and administrative reports, described in Chapter XXV of this Specification, as pertain to support of AUTEC's Timing Systems.

## D. WORKLOAD FACTORS

1. ATS and ASTS at all sites except WPB shall be operated 24 hours per day, 365 days per year (except during approved periods of downtime or scheduled maintenance).

2. The WPB AST shall be operated in support of special NUWC or Range User requirements on a case by case basis.

3. TCG and DGSS installations aboard AUTEC and/or Range User vessels will be commensurate with Range Usage information presented in Chapter IV(1) of this Specification.

## E. KEY PERSONNEL/PERSONNEL QUALIFICATIONS

1. Key Personnel:

a. Timing System Engineer

1. Education: BS degree in Electrical or Electronic Engineering or a physical science with 5 years direct experience and increasing responsibilities, as described below.

OR

Be a graduate of a formal two year course of study in electronics, or have equivalent military training, with 10 years direct experience and increasing responsibilities, as described below.

2. Experience: Have direct experience and increasing responsibility in the design, modification, and/or maintenance of digital and analog electronic circuits to include a majority of the following:

(a) RF transmitter/receiver systems.

(b) Precision time code generators/timing systems.

(c) IRIG-B or commercial scientific timing standards and timing synchronization techniques and methodologies.

3. Other: Have excellent knowledge of digital and analog circuit design and troubleshooting/fault isolation methodology. Good verbal and written communication skills are required.

## F. APPLICABLE DOCUMENTS

| | |
|---|---|
| OCD-(07.2)-03-XX; | Central Timing Station Synchronization |
| OCD-(07.2)-04-XX; | Time Code Generator |
| OCD-(07.2)-05-XX; | Data Gathering System Synchronizer |
| OCD-(07.2)-07-XX; | Inter-Range Instrumentation Group-B (IRIG-B) Transmission System |
| OCD-(07.2)-08-XX; | Subcentral Timing Station Synchronization |
| Other OCDs; | Relevant/Related OCDs as may be listed in Table XV-4. |

# TIMING SYSTEM EQUIPMENT

| Equipment | Mfr | Model No. | Qty |
|---|---|---|---|
| **ATS (SITE 1)** | | | |
| GPS Timing Receiver | TrueTime | XL-DC | 2 |
| Time Distribution Unit | Datachron | - | 1 |
| Error Detection Unit | Datachron | - | 1 |
| Cessium Frequency Standard | FTS | 4050 | 2 |
| **ASTS (SITES 2,3, and 4)** | | | |
| Time Receiver | TrueTime | XL-AK | 3 |
| Time Distribution Unit | Datachron | - | 3 |
| **ASTS (SPARE)** | | | |
| Time Code Generator | Datachron | - | 1 |
| Time Distribution Unit | Datachron | - | 1 |
| **ASTS (WPB)** | | | |
| Time Code Generator | Datachron | - | 1 |
| Time Distribution Unit | Datachron | - | 1 |
| GPS Timing Receiver | Truetime | - | 1 |
| **PORTABLE/RANGE USER** | | | |
| Data Gathering System Synchronizer | AUTEC | - | 5 |
| Time Code Translator | DATUM | - | 2 |
| VHF IRIG Receiver | AUTEC | - | 4 |
| UHF IRIG Receiver | Watkins-Johnson | - | 2 |
| Rubidium Oscillator | Efratom | - | 4 |

Table VII-2

Figure VII-3
AUTEC Central and Sub-Central Timing Systems

# VIII. MK-30 TARGET AND BATTERY SUPPORT

## A. GENERAL

The MK-30 Mod 1 Target is a self-propelled, pre-programmed torpedo-like device. By simulating a submarine, a MK-30 Target can simultaneously stimulate most ASW sensors and torpedo sonar systems. The MK-30 Target fulfills virtually all current U.S. Navy training requirements for surface, submarine, and airborne platforms. The MK-30 Target is especially well suited to support coordinated ASW tactical training exercises, feasibility studies, and operational evaluations for a variety of ASW sensors and weapons.

## B. DESCRIPTION

AUTEC's Mobile Target Facility is located in the Range Support Shop (RSS). The present internal layout of the facility provides three MK-30 Target preparation (PREP)/ post-run lines and one inspection/ troubleshooting/ preventative maintenance line. This fourth line may be used as a PREP line if needed to support the scheduled workload. The Mobile Target Facility also includes a logistic storage and control area, a Battery Shop, a Functional Item Repair (FIR) shop, data reduction and analysis facilities, engineering and management offices, preventative maintenance spaces and equipment, and space for other related functions. A representative list of equipment in the Mobile Target Facility is provided in Table VIII-1. Actual inventory is as provided by NUWC.

The typical target cycle consists of mission preparation, launch and run, recovery, and post-run procedures. Mission preparation includes: functional systems tests; consumables replacements; software run-geometry programming; battery charging; pressurizing internal nitrogen gas systems; target assembly; leak testing; final weigh-out; and certification for run.

The MK-30 Target is subsequently launched from a surface vessel or helicopter (see also Chapter IX(2) of this Specification) and follows a pre-programmed run profile. An Acoustic Command Link Controller located in the CCB (see also Chapter IV(1) of this Specification) may be used to generate remote acoustic commands in order to modify the target's course, speed and/or running depth, or to terminate the run. In addition, emergency shutdown pingers are provided which can be used to transmit shutdown command signals, from surface craft or helicopters to MK-

30 Mobile Targets, in the event of range safety violations/failure of the CCB Acoustic Command Link Controller.

Following shut-down, the target is recovered by a torpedo retriever or helicopter and returned to the RSS for post-run procedures (see also Chapters IX(1) and IX(2) of this Specification). Post-run procedures include: examination for physical damage; washdown; sectional disassembly; retrieval of internal digital data recorded during the run; troubleshooting and repair/replacement of problem components; and refurbishment of appropriate assemblies.

## C. CONTRACTOR RESPONSIBILITIES

1. The Contractor shall maintain all of AUTEC's MK-30 Targets and associated support equipment in an operational status except during scheduled range maintenance periods authorized by NUWC. The Contractor shall support AUTEC's MK-30 Target program in accordance with the AUTEC Schedule of Operations, published Operations Directives, Workload Factors given in paragraph D, Applicable Documents cited in paragraph F, and other requirements stated below. Special requirements may be tasked by NUWC Work Order or Letter of Direction.

2. The Contractor shall prepare, and have available for launch, MK-30 Targets in such quantities and configurations as are required by the AUTEC Schedule of Operations and published Operations Directives.

3. The Contractor shall provide a MK-30 Target Program Engineer-in-Charge, qualified to oversee and coordinate all technical and logistic functions relating to MK-30 Targets and MK-30 Target SSE. This individual shall have the authority to delineate target turnaround procedures, which deviate from established practices, when deemed appropriate and necessary. A record of such deviations, and the rationale for each decision, shall be maintained. In the absence of the NUWCDETAUTEC MK-30 Target Program Manager, this individual shall also have the authority to locally approve minor Requests for Deviations/Waivers that do not impact safety, target hull integrity, or target in-water performance. All such Requests for Deviations/Waivers, however, shall be reviewed by the NUWCDETAUTEC MK-30 Target Program Manager before they are formally submitted to NUWC Division Keyport. The Engineer-in-

Charge, assisted by others, shall be qualified to perform and/or oversee the following tasks:

a. Create/verify pre-programmed run geometries and other acoustic/dynamic target presets, as specified by the Range User, in accordance with controls and procedures contained in NAVSEA SW581-C1-MMI-XXX/MK30 and OCD-(08)-25-XX.

b. Assess/report actual vs. pre-programmed in-water target performance through analysis of real time 3-D track data and on-board data recorded during each run.

c. Perform on-site repairs and authorized modifications to MK-30 Target Functional Item Replacement (FIR) components.

d. Troubleshoot, isolate, correct, and subsequently verify proper operation of defective target and special support equipment components and assemblies. Repair wiring harnesses, umbilical cables, and connectors. Perform all soldering in accordance with requirements cited on MK-30 Target Program drawings.

e. Provide assistance to Government, target/SSE manufacturer, or other contractor representatives in the installation and evaluation of modifications and improvements to MK-30 Target Program equipment.

f. Perform receipt inspection of all newly-received target/SSE components and assemblies. No items shall be placed in inventory that are not satisfactorily tested.

g. Analyze target component and assembly, and Special Support Equipment problems and failures. Determine and report the causative factor(s). If warranted, develop and submit Engineering Change Proposal(s) (ECPs), and/or Modification Proposals (MOD PROPs) as applicable, to recommend changes to existing design(s) or procedure(s).

h. Perform preventative maintenance (PM) as required by SW581-CO-MMI-XXX/MK30 for SSE and for MK-30 Targets. PM is to be scheduled and conducted so as to avoid or minimize any impact on operational schedules.

i. Prepare and review technical documentation.

j. Provide NUWC Work Order support.

k. Provide technical interface with NUWC/other activities.

4. The Contractor shall provide an adequate staff of persons qualified to perform the following tasks:

a. Maintain an on-site inventory and provide inventory control of MK-30 Target expendables, spare/repair parts, batteries, etc., provided by the MK-30 Target Depot Level Maintenance Activity (e.g., NUWC Division Keyport, WA), per SW581-C1-MMI-XXX/MK30; assure that such items are requisitioned with sufficient lead time to allow delivery prior to expending existing supplies; and assure that timely inputs/updates of on-hand assets are made to NUWC Division Keyport.

b. Develop and maintain an inventory of Government-provided consumables, expendables, tools, and spare/repair parts needed to support AUTEC's MK-30 Target Program, but which are not provided by the MK-30 Target Depot Level Maintenance Activity, in accordance with the policies provided in Chapter XXI(1) of this Specification.

c. Provide technical support to Purchasing for procurement of MK-30 Target program-related equipment including: specification writing; technical evaluation of proposals; cost review; quality review; technical qualification of sources; preparation of inspection and acceptance procedures; and conduct of acceptance test.

d. Provide for the shipment of defective MK-30 Target components and other related items (for turn-in/refurbishment, etc.), to NUWC Division Keyport, WA, NUWC Division Newport, RI, or elsewhere as may be required.

e. Provide for the cataloging and control of all MK-30 Target Program drawings, documentation, related publications, and correspondence. Publications shall be maintained up-to-date, and outdated publications shall not be used.

f. Maintain configuration control and applicable records for all MK-30 Targets, MK-30 Target components, and SSE.

5. The Contractor shall collect data, maintain records, and prepare/submit all MK-30 Target Program reports required by COMNAVSEASYSCOM and NUWC as described in the RSS Standard Operating Procedures Manual, applicable OCDs, and MK-30 Target Program technical documents promulgated by COMNAVSEASYSCOM. MK-30 Target-related inputs to the Torpedo Management Information System, per OD 46291, shall be submitted via computer terminal, located in the RSS, directly into the data base maintained by NUWC Division Keyport. The Contractor shall assist NUWC in the conduct of any MK-30 Target program inspections, surveys, audits, etc. required/conducted by outside authority. The Contractor shall respond promptly to any special requests for data/reports.

6. The Contractor shall provide a training program to ensure that all personnel involved with the MK-30 Target Program are qualified to perform their assigned tasks. Personnel assigned shall be certified in accordance with the requirements of OCD-(08)-45-XX. The Contractor shall maintain a record of such training and/or certification received by each individual. Personnel who have not been so certified shall not be permitted to conduct operations without supervision.

7. The Contractor shall provide support for in-water Engineering Runs for MK-30 Targets as requested/approved by NUWC. Engineering Runs are conducted to: verify the operability of newly-received major target components and assemblies; verify the repair of intermittent target problems; assess the performance and operation of proposed/ developmental improvements and changes; etc.

8. The Contractor shall provide a qualified Target Systems Controller to support Real Time Display Center functions (see also Chapters II(1) and IV(1) of this Specification), whenever a MK-30 Target is scheduled to be launched, and during all MK-30 Target in-water runs, to ensure that the target is operating in a safe and proper manner. Specific Target System Controller duties and responsibilities are as stated in OCD-(08)-29-XX, and the ASW Mobile Target MK-30 Mod 1 Operational Guidance.

9. The Contractor shall maintain and operate the Battery Shop in the RSS. The Contractor shall assemble, activate, charge, and scrap

batteries/cells, and maintain records for MK-30 Target batteries in accordance with the requirements of SW581-C1-MMI-

XXX/MK30. Other batteries and related equipment shall be maintained and serviced in accordance with technical documents provided by the manufacturer(s), or others, as appropriate.

10. The Contractor shall provide a Quality Control/Quality Assurance Program for AUTEC's MK-30 Target Program in compliance with the NAVSEA TO 300-AM-ORD-010. See Chapter XVII of this Specification for further requirements.

11. The Contractor shall organize a MK-30 Target equipment Material Review Board as described in NAVSEA TO 300-AM-ORD-010. The Board is responsible for determining the disposition (e.g. scrap, salvage, etc.) of non-conforming MK-30 Target material.

12. All MK-30 Target material which must be shipped shall be properly packaged and marked for shipping to guard against damage or loss. A DD Form 1149, Shipping Document, shall be properly prepared for each shipment to provide traceability.

13. The Contractor shall assure that the annual MK-30 Target Intermediate Maintenance Activity (IMA) certification requirements of NAVSEA SW580-BA-ORD-010/MK-30 are satisfied for AUTEC's Mobile Target Facility (e.g. AUTEC's MK-30 Target "Operating Site").

14. Contractor personnel shall attend meetings and conferences related to Target Program matters. Such meetings, etc., are held at NUWC Division Keyport, WA, COMNAVSEASYSCOM HQ, Washington, DC, NUWC Division, Newport RI, etc. The Contractor shall be prepared to make technical and programmatic presentations to senior Government or other contractor representatives as requested by NUWC.

15. The Contractor shall be responsible for following appropriate security guidelines for classification, identification, marking, and safeguarding of classified MK-30 Target resources as dictated by the subject matter. The Contractor shall maintain accurate records for accountability purposes. Specific administrative, operational, physical, and personnel controls are set forth in Chapter XXIII of this Specification, the current DoD Contract Classification Specification (DD Form 254) as appearing in Section J, Attachment (8), of this

Contract, and in appropriate Applicable Documents cited in paragraph F.

16. The Contractor shall submit all NUWC-required technical and administrative reports, described in Chapter XXV of this Specification, as pertain to support of AUTEC's MK-30 Target program.

## D. WORKLOAD FACTORS

1. An average monthly workload of 30 target preparations is estimated for MK-30 Targets.

2. The peak workload requirement for MK-30 Targets is estimated to be 15 target preparations per week for two consecutive weeks.

3. An average of 25 actual in-water runs per month is estimated for MK-30 Targets. The difference between target preparations (e.g., schedule) and actual in-water runs results from Range User test cancellations, severe weather interruptions, pre-launch failures, etc. Only one MK-30 Target is expected to be running on the Weapons Range at any one time.

4. The MK-30 Target problem/failure rate averages near 15% of total in-water runs. Actual time to troubleshoot/repair is an as-occurring workload. Estimated average elapsed time is eight hours per event.

5. Travel: It is estimated that 10 trips of five days each will be required yearly for purposes of attending/participating in MK-30 Target Program meetings and conferences.

6. Special Note: MK-30 Target and Battery Support services provided under this Contract are directly funded by COMNAVSEASYSCOM'S MK-30 Target Program Office (Program Manager, Ships-403). The NAVSEASYSCOM MK-30 Mod 1 Target Program Office uses the Contractor-proposed/Government-approved staffing level and skills mix, established to meet the stated Workload Factors of this Chapter, to develop yearly operating budgets for support of Fleet requirements for the use of MK-30 Targets. In order to assure that such requirements can be met without interruption, the Contractor shall ensure that all reasonable steps are taken to adhere to that level of staffing and associated skills mix established at Best and Final Offer, or as may be

changed by subsequent Contract Modification, and to fill any occurring vacancies in a timely manner.

## E. KEY PERSONNEL/PERSONNEL QUALIFICATIONS

1. Key Personnel:

a. MK-30 Target Program Engineer-in-Charge

1. Minimum Number Required: 1

2. Education: BS Degree in Electrical/ Electronic/Mechanical Engineering, with five years direct experience and increasing responsibilities as described below.

3. Experience: Have direct experience and progressive responsibility in the design, troubleshooting, repair and assembly of electro-

mechanical systems/equipment of a complexity similar in scope to the MK-30 Target and associated SSE. Experience as the manager/coordinator of a production facility of similar complexity, with responsibility for establishing and meeting production schedules and deadlines. Experience producing technical documentation (e.g., technical memos, sketches, drawings, reports, etc.).

NOTE: One year of direct MK-30 Target experience may be substituted for two years of general experience.

4. Other: Good oral and written communications skills are required.

F. **APPLICABLE DOCUMENTS**

| | |
|---|---|
| SW581-C1-MMI-XXX/MK30; | Description Target Torpedo MK-30 Mod 1 |
| NAVSEA OD 46291; | Mobile ASW Targets Technical Data System, TMIS Reporting Handbook |
| NAVSEA SW581-CO-MMI-XXX/MK30; | Technical Manual, Description, Operation, and Maintenance Special Support Equipment MK-578 Mod 0 |
| NAVSEA SW580-BA-ORD-010 /MK-30; | Mobile ASW Target MK 30 Certification Examining Board Procedures and Standards |
| NAVSEA TO 300-AM-ORD-010; | Quality System Requirements and Methods for Navy Weapons and Combat Systems |

| | |
|---|---|
| NAVAIR 17-35 MTL-1; | Metrology Requirements List (METRL) |

ASW Mobile Target MK-30 Mod 1 Operational Guidance

Range Support Shop Standard Operating Procedures Manual (Latest Revision)

| | |
|---|---|
| OCD-(08)-21-XX; | Range Support Services Group MK-30 Targets and Battery Operations Configuration/Document Control System |
| OCD-(08)-24-XX; | Range Support Shop MK-30 Logistics Operations |
| OCD-(08)-25-XX; | Standard Approved Geometries and Generating New Mobile Target Geometries |
| OCD-(08)-26-XX; | Target Scheduling |

- - - - - *deleted* - - - - -

| | |
|---|---|
| OCD-(08)-29-XX; | Target Systems Controller Responsibilities |

- - - - - *deleted* - - - - -

| | |
|---|---|
| OCD-(08)-45-XX; | Range Support Target Facility Training Program |
| OCD-(13.1)-01-XX; | Management of Shore-Based Weight Handling Equipment |
| Other OCDs; | Relevant/Related OCDs as may be listed in Table XV-4 |
| APP 11-3G; | Fire Protection Policy |

JA1-241
N61339-97-C-
0001

P00040

APP 11-5G; Hurricane Plan, Andros Island

# MOBILE TARGET FACILITY EQUIPMENT

| Designate | Equipment | Qty |
|---|---|---|
| RSS SPECIAL SUPPORT EQUIPMENT: | | |
| 9A1 | System Test Set | 3 |
| 9A2 | Subsystem Test Set | 3 |
| 9A3 | Guidance & Control Test Set | 3 |
| 9A4 | Acoustic Test Set | 3 |
| 9A6A1 | Power Supply | 3 |
| 9A6A2 | Power Supply | 3 |
| 9A12 | Line Filters | 4 |
| 9A8 | Speedsetter Load Banks | 3 |
| 9A9 | Battery/Acoustic Simulators | 3 |
| 9A10 | Motor Stands | 3 |
| 9A11 | Speedsetter Logic Test Boxes | 4 |
| 9A13 | Main Battery Loads | 2 |
| 9A14 | Towed Array Test Fixture | 2 |
| 9AAAA | Accumulator Simulator | 4 |
| 9ACCC | EOR Subsystem Simulator | 4 |
| 9ADDD | Towed Array Test Set | 3 |
| 9AEEE | Tension Test Fixture | 2 |
| 9AFFF | Acoustic/EOR Pressure Monitor | 2 |
| 9AGGG | Contactor Verification Boxes | 4 |
| 9AHHH | Isolation Transformer | 5 |
| 9AJJJ | Leak Test Panels | 1 |
| 9AKKK | Helo Wet Probe Simulators | 3 |
| 10A1 | Launch Control Boxes | 11 |
| 10A7 | Gas Booster Unit | 2 |
| 10A11 | Emergency Shutdown Pinger | 7 |
| 10A12 | Vacuum Test Pump | 6 |
| None | MK-30 Simulators | 4 |
| 10A13 | High Resolution Vacuum Test Sets 001 | 2 |

Table VIII-1

# MOBILE TARGET FACILITY EQUIPMENT

| Designate | Equipment | Qty |
|---|---|---|
| BATTERY CHARGING EQUIPMENT: | | |
| 11A11 | Subcontrollers | 18 |
| 11A11A1 | Master Controllers | 3 |
| DATA REDUCTION /DATA PROCESSING EQUIPMENT: | | |
| DATA ANALYSIS EQUIPMENT: | | |
| | PC Desktop 486 | 14 |
| | PC Desktop 286 | 1 |
| | Printer Laserjet HP 3 | 5 |
| | Printer Laserjet HP 4 | 2 |
| | Printer Dot Matrix LA-50 | 2 |
| | Printer Dot Matrix 1000 | 1 |
| | Printer/Plotter V-80 | 2 |
| | Drive Tape Playback DS-311 | 2 |
| | Drive Mag-Tape Back-up | 3 |
| | Programmer Prom 22A | 3 |
| | Terminal VT-240 | 3 |
| | Drive Dual CD-ROM | 4 |
| | Scanner Color IIcx | 1 |
| TARGET INVENTORY: | | |
| 2821001 | MK-30 Mod 1 Target | 15 |

Table VIII-1 (cont.)

MOBILE TARGET FACILITY EQUIPMENT

| Drawing No. | Equipment | Allowance |
|---|---|---|
| MAJOR FIR ITEM INVENTORY: | | |
| 1223204-1 | UDDS Recorder | 2 |
| 2819652 | Press Sensor | 2 |
| 2819710 | Control Test Panel | 1 |
| 2819935 | LSG Reservoir | 3 |
| 2819952-1 | LSG Projector | 8 |
| 2819952-2 | LSG Compensator | 4 |
| 2819953 | MF Projector | 2 |
| 2819954 | HF Projector | 1 |
| 2820820 | EOR Radio | 2 |
| 2820832 | Pressure Reservoir | 6 |
| 2820845 | Aft Prop | 2 |
| 2820846 | FWD Prop | 3 |
| 2820850 | 107 HP Motor | 4 |
| 2820851/5408770 | Control Assy | 2 |
| 2820854 | Shaft/Seal Assy | 7 |
| 2820854 | Lanyard Switch | 2 |
| 2820928 | SS Logic Assy | 2 |
| 2820950 | Pwr Switch Control | 1 |
| 2820980 | Aux Pwr Supply | 2 |
| 2820991 | Power Switch | 4 |
| 2821003 | Nose Hull Sect | 2 |
| 2821004/5407775 | Fwd Tail Hull Sect | 2 |
| 2821005 | Aft Tail Hull Sect | 2 |
| 2821009/5408763 | Batt Hull Sect | 2 |
| 2821013 | G&C Hull Sect | 1 |
| 2821015 | XDCR Hull Sect | 2 |
| 2865969 | UMB Connector | 30 |
| 3134400 | Pwr Amp AC Bottom | 2 |
| 3134410 | Pwr Amp AC Top | 2 |
| 3134690 | Capacitor Bank | 2 |
| 3134800 | APU Top | 1 |

Table VIII-1 (cont.)

Table VIII-1 (cont.)

MOBILE TARGET FACILITY EQUIPMENT

| Drawing No. | Equipment | Allowance |
|---|---|---|
| 3134900 | APU Bottom | 1 |
| 3135220 | ATAT Tuning Network | 1 |
| 3135956 | Skeg Cable W702 | 4 |
| 3135958/6146034 | Towed Array | 14 |
| 5205248 | Casualty Net, MCLB | 3 |
| 5499340 | Digital G&C | 3 |

NON-FIR ITEM INVENTORY (MINOR ITEMS):

| | | |
|---|---|---|
| 5499392 | Pressure Regulator | 5 |
| 5545587/783552 | A-Cable | 15 |
| 5759499 | PPA Module | 8 |
| 6146010 | Elec Assy Acous | 2 |
| 6146015 | Performance Recorder | 2 |
| 348280 | Cable W316 | 3 |
| 2819321 | Cable W101 | 2 |
| 2819322 | Cable W102 | 2 |
| 2819323 | Cable W211 | 2 |
| 2819325 | Cable W302A | 2 |
| 2819334 | Cable W114 | 1 |
| 2819496 | Cable W201 | 4 |
| 2819497 | Cable W202 | 2 |
| 2819498 | Cable W203 | 2 |
| 2819499 | Cable W204 | 3 |
| 2819662 | Cable W302 | 1 |
| 2819664 | Cable W304 | 1 |
| 2819665 | Cable W305 | 2 |
| 2819667 | Cable W307 | 1 |
| 2819668 | Cable W308 | 2 |
| 2819669 | Cable W309 | 1 |
| 2819670 | Cable W301 | 1 |
| 2819671 | Cable W311 | 1 |
| 2819672 | Cable W312 | 1 |
| 2819674 | Cable W314 | 1 |

Table VIII-1 (cont.)

Table VIII-1 (cont.)

MOBILE TARGET FACILITY EQUIPMENT

| Drawing No. | Equipment | Allowance |
|---|---|---|
| NON-FIR ITEM INVENTORY (MINOR ITEMS): | | |
| 2819863 | Cable W611 | 3 |
| 2819922 | Cable W402 | 1 |
| 2819923 | Cable W403 | 2 |
| 2819925 | Cable W405 | 1 |
| 2819926 | Cable W406 | 1 |
| 2819927 | Cable W407 | 2 |
| 2819930 | Cable W402A | 1 |
| 2819331 | Cable W411 | 1 |
| 2820834 | Solenoid Valve | 6 |
| 2820860-2 | Radio Beacon | 6 |
| 2820925 | Cable W512 | 1 |
| 2821000 | Cable W602 | 2 |
| 2821051 | Cable W111 | 2 |
| 2823402 | Cable W202A | 2 |
| 3134396 | Pwr Amp Module, 200W | 3 |
| 3134418 | Prog Refq Dvdr A16-A18 | 1 |
| 3134480 | LSG Attn A25 A32 | 1 |
| 3134484 | LSG Sum-Equl A33 | 1 |
| 3134496 | ACI Noise Gen A35 | 1 |
| 3134500 | ACI Test Logic A36 | 1 |
| 3134504 | Casualty Logic A37 | 1 |
| 3134520 | ASAT Equal Board A4 | 1 |
| 3134532 | ACI EOR A38 | 1 |
| 3134552 | Pwr Amp Module, 400W | 1 |
| 3134580 | Pwr Regulator | 1 |
| 3134618 | ACL Board 1 A45 | 2 |
| 3134622 | ACL Board 2 A46 | 2 |
| 3134630 | ACL Board 4 A8 | 2 |
| 3134634 | ACL Board 5 A9 | 2 |
| 3134638 | ACL Board 6 A10 | 2 |

Table VIII-1 (cont.)

MOBILE TARGET FACILITY EQUIPMENT

| Drawing No. | Equipment | Allowance |
|---|---|---|
| 3134642 | ACL Board 7 A11 | 2 |
| 3134659 | Cable W412 | 1 |
| 3134660 | Cable W413 | 1 |
| 3134661 | LSG Harmonic Genrtr A14 | 1 |
| 3134699 | EOR Dest A48 | 1 |
| 3135201 | Cable W403A | 1 |
| 3135203 | Cable W513 | 1 |
| 3135204 | Cable W514 | 1 |
| 3135205 | Cable W515 | 1 |
| 3135206 | Cable W516 | 1 |
| 3135207 | Cable W517 | 1 |
| 3135208 | Cable W518 | 1 |
| 3135209 | Cable W519 | 3 |
| 3135214 | Cable W512A | 2 |
| 3135215 | Cable W315 | 1 |
| 3135218 | Cable W1A | 2 |
| 3135239 | Cable W301A | 1 |
| 3135240 | Cable W301B | 1 |
| 3135241 | Cable W301C | 1 |
| 5014090 | Cable W115 | 2 |
| 5014091 | Cable W212 | 3 |
| 5168274 | PC Board Pinger Start/ Stop LCB | 2 |
| 5205251 | ASAT Cross FLT A3 | 1 |
| 5205255 | ACL Board 3 A7 | 2 |
| 5205259 | BSS #3 A41 | 1 |
| 5205830 | Cable W306 | 1 |
| 5205832 | Cable W606 | 2 |
| 5205834 | Cable W501 | 2 |
| 5758358 | Cable W500 | 4 |
| 5758883 | LSG Sum-Equl A33* | 1 |
| 5758891 | ASAT Cross Flt A3* | 1 |
| 5758901 | ACL Board 8 A13 | 1 |
| 5759504 | LSG ROM Dest A47* | 1 |

Table VIII-1 (cont.)

| | | |
|---|---|---|
| 5759605 | LSG SQ-Sine A19-A24 A26-A29* | 2 |

Table VIII-1 (cont.)

MOBILE TARGET FACILITY EQUIPMENT

| Drawing No. | Equipment | Allowance |
|---|---|---|
| 5978613 | ATAT SIG Procs A44 | 2 |
| 5978625 | ACT Log Amp A39 | 1 |
| 5978680 | ATAT Board 1 42A | 1 |
| 5978684 | ATAT SIG Gatin A43 | 2 |
| 5978688 | ATAT TGT Strgh A45 | 1 |
| 5979133 | Cable W303 | 1 |
| 5979570 | Cable W304 | 1 |
| 5979837 | ACI Timing A34 | 1 |
| 5979843 | Cable W317 | 1 |
| 5979844 | Cable W318 | 1 |
| 5979845 | Cable W319 | 1 |
| 5979846 | Cable W320 | 1 |
| 5979866 | Cable W324 | 1 |
| 597877 | LSG Spd Freq A15 | 1 |
| 5979881 | LSG Freq Div A16-A18 | 1 |
| 6146027 | ASAT TGT-ST BD A1 | 1 |
| 6146031 | ACI Log Preamp A40 | 1 |

Approximately 700 expendable line items (O-Rings, Battery Hardware, Screws, Nuts, Washers, Fuses, etc.)

Table VIII-1 (cont.)

Table VIII-1 (cont.)

# IX. ORDNANCE SUPPORT

## 1. EXERCISE WEAPONS AND ORDNANCE: PREPARATION/STORAGE/ HANDLING/POST-RUN SERVICES

### A. GENERAL

AUTEC's exercise weapon/ordnance support requirements encompass a broad spectrum of U.S. and foreign Navy exercise and dummy undersea weapons, RDT&E/FOT&E undersea vehicles, and other items such as sonobuoys, cartridge activated devices, pyrotechnics, and mobile targets. Preparation and post-run requirements for Mobile Targets MK-30 are addressed separately in Chapter VIII of this Specification.

### B. DESCRIPTION

Tests and exercises conducted on the Andros Ranges use various types of vehicles. Some tests use actual exercise weapons (MK-48 Mods 4, 5, and 6, MK-46 Mods 4 and 5, MK-50, etc.) while others employ dummy weapon shapes (TOTEM, EHCTV, RECAP, REXTORP, DLV, PLV, etc.), or RDT&E/FOT&E test vehicles. Vehicles are delivered to the Torpedo Facility (Bldg. 1684) at AUTEC's Site 1 on Andros Island for post-run treatment. Post-run procedures are defined in the applicable OCD/SOP and NAVSEA OD for each vehicle. For the REXTORP vehicle, AUTEC operates an Intermediate ("I") Level Maintenance facility, certified by COMNAVSEASYSCOM, and performs pre-test preparation as well as post-test turnaround and related "I" Level Maintenance functions. In addition, exercise torpedo OTTO Fuel waste is managed by the post-run facility under the direction of the In-Service Engineering Agent (ISEA), NUWC Division, Keyport, WA. A representative list of exercise weapon preparation/post-run equipment is provided in Table IX-1. Actual inventory is as provided by NUWC.

The AUTEC Torpedo Facility (Bldg. 1684) is fully ventilated to meet NAVOSH standards. The facility is equipped with two flushing stands, two ullage exhaust removal lines, two transducer/washdown lines, and two instrumentation and/or exercise recording medium removal lines to facilitate post-run of exercise torpedoes MK-48 Mods 4,5, and 6. Additionally, to support the post-run of exercise torpedoes MK-46 Mods 4 and 5, there are two ventilated lines for use with MK-46 (Torpedo) Portable Flushing Systems.

Exercise weapon and target vehicles (both U.S. and foreign) arrive and depart from Site 1 on Andros Island in a variety of ways. Vehicles may be transported from CONUS by the MSC barge from Port Canaveral, FL (see Chapter XXI(1) of this Specification), or C-130 aircraft, but predominantly, they arrive by Range User vessels, helicopters, or aircraft, and are launched by the Range User platform. The MK-30 Target and REXTORP vehicles are prepared and post-run at Site 1; therefore, one vehicle can make many runs at AUTEC in the course of its life cycle. Most of the vehicles launched at AUTEC are positively buoyant and float to the

surface after an in-water run. At the end-of-run, these vehicles are recovered by either AUTEC surface vessel or helicopter. Vehicles are then

transported to Site 1 where they are loaded onto flat-bed trailers and taken to AUTEC's Torpedo Facility for post-run treatment/turn-around, and shipment as required by the Range User. Vehicles are normally returned to CONUS aboard the MSC barge.

Sonobuoys, smokes, and other pyrotechnic devices used to support various tests and operations are stored in lockers and magazines located at Site 1.

All exercise and dummy weapons, RDT&E/FOT&E test vehicles, targets, pyrotechnics/explosive devices and other ordnance items must be handled in accordance with Government approved procedures.

## C. CONTRACTOR RESPONSIBILITIES

1. The Contractor shall maintain all of AUTEC's ordnance handling, and exercise weapon preparation and post-run equipment in an operational status except during scheduled maintenance periods authorized by NUWC. The Contractor shall ensure that routine preventative maintenance is conducted on a not-to-interfere basis with scheduled operational requirements. The Contractor shall provide support for ordnance/explosive handling/transportation, REXTORP preparation and post-run, and post-run of Range User vehicles in accordance with the AUTEC Schedule of Operations, published Operations Directives, Workload Factors given in paragraph D, Applicable Documents cited in paragraph F, and other requirements cited below. Special requirements may be tasked by NUWC Work Order or Letter of Direction.

2. All exercise and dummy weapons, RDT&E/FOT&E test vehicles, targets, sonobouys, pyrotechnics, and other ordnance items shall be handled and stored in accordance with the safety procedures, and other requirements of the documents cited in paragraph F. The Contractor shall provide a training, testing, certification, and licensing program for all personnel assigned to handle, transport, store, issue, or otherwise work with exercise ordnance/explosives/pyrotechnic devices in accordance with the requirements cited in OCD-(09.1)-02-XX, and other relevant documents listed in paragraph F. As applicable, such training shall consist of both initial and periodic refresher sessions. See also Chapters XVIII, XX(3), and XXI(1) of this Specification. The Contractor shall maintain a record of all such training, certification, and licensing received by each individual. Personnel who have not been so certified shall not be permitted to conduct operations without supervision.

3. The Contractor shall assure that AUTEC's Ordnance Handling Equipment (OHE), as listed in NAVSEA OP 2173, as well as any other WHE/MHE equipment including slings, pendants, etc. used to handle/transport exercise and dummy weapons, targets, other ordnance

items, etc. is periodically inspected and tested, and that the load carrying capacity is certified in accordance with the requirements cited in Chapter XIII(1) of this Specification. Repairs shall be performed as required. The Contractor shall keep records of all inspection and maintenance actions performed for each piece of equipment.

4. The Contractor shall provide suitably licensed/certified personnel to support the loading/offloading/transportation of exercise weapons/targets/ RDT&E and FOT&E vehicles/pyrotechnics and other explosive devices as follows:

a. To/from the MSC barge at Site 1 on Andros Island.

b. To/from AUTEC's range craft at Site 1 on Andros Island.

c. To/from the M&O Contractor's helicopters at Site 1 on Andros Island.

d. Between the Andros Town airport and Site 1 as well as between the pier, heliport, Torpedo Facility, lockers, and magazines at Site 1 on Andros Island.

e. Occasionally to/from the Contractor's aircraft at the West Palm Beach, FL, International Airport.

f. On occasion, the Contractor may be required to provide handling and other requisite services to stage weapons/targets at other locations.

5. The Contractor's representative at Port Canaveral, FL, (see Chapter XXI(1) of this Specification) shall be responsible for coordinating the expeditious trans-shipment of weapon/target vehicles to/from Andros Island.

6. The Contractor shall perform transportation, handling, post-run treatment, preservation, containerization, reporting, and shipping of the below listed vehicles in accordance with the relevant Applicable Documents cited in paragraph F.

a. MK-48 Mods 4, 5, and 6 Exercise Torpedoes.

b. MK-46 Mods 4 and 5 Exercise Torpedoes.

c. TOMAHAWK Test Missiles (TOTEMs), TOMAHAWK Recoverable Capsules (RECAPS), Dummy Launch Vehicles (DLVs), Presettable Launch Vehicles (PLVs), and HARPOON EHCTVs.

d. MK-50 Exercise Torpedoes.

e. MK-46 and MK-50 REXTORPS.

f. Miscellaneous RDT&E/FOT&E and other test vehicles in accordance with Range User instructions as provided by NUWC.

7. The Contractor shall provide support for the removal and analysis of exercise weapon internal data recording media (i.e. MK-48 Exercise Torpedo Internal Exercise Section (TIES) magnetic tapes, MK-48 Mods 4, 5, and 6 Fleet Exercise Section recordings, etc.), as well as digital data extraction (i. e. computer download) as may be applicable to a particular vehicle. It is noted that eventually all MK-48 Mods 4, 5, and 6 Exercise Torpedoes will incorporate the computer download data extraction methodology. As applicable, the Contractor shall be responsible for subsequently returning internal data recording media to the appropriate IMA or Range User.

Although not routinely required, the Contractor shall, upon request by NUWC, provide support to extract MK-46 EXTORP internal run data.

8. The Contractor shall provide for the safe handling of OTTO Fuel waste in accordance with (AUTEC's) Hazardous Waste Management Plan and as further described in Chapters XXI(1) and XXII(2) of this Specification. This includes packaging for shipment and coordination of shipments with NUWC Division, Keyport, WA, and NOTU, Port Canaveral, FL.

9. The Contractor shall follow response procedures cited in AUTEC’s Installation Spill Contingency Plan (ISCP) in the event of a spill of OTTO Fuel or other hazardous substance during exercise ordnance preparation/storage/handling/post-run operations (see also Chapter XXII(2) of this Specification).

10. The Contractor shall assure that all personnel working with OTTO Fuel meet the physical requirements given in NAVSEA TM S6340-AA-MMA-010.

11. The Contractor shall prepare, and have available for launch, REXTORP vehicles in such quantities and configurations as are required by the AUTEC Schedule of Operations and published Operations Directives.

12. The Contractor shall keep records, prepare reports, and perform preparation, post-run, and 20th run "I" Level Maintenance functions for REXTORP vehicles in accordance with procedures and requirements contained in NAVSEA SW 515-AG-MMI-010/MK-46 REXTORP and NAVSEA SW 516-AC-MMI-010/MK-50 REXTORP. The Contractor shall assure that all requirements, cited in these two documents, for the continued NAVSEASYSCOM certification of AUTEC's REXTORP "I" Level Maintenance facility, are satisfied.

13. The Contractor shall control and maintain all of AUTEC's magazines, storage lockers, and ready service lockers in accordance with the requirements of NAVSEA OP-5 and as further described in Chapters XXII(1) and XXII(2) of this Specification. The Contractor shall assure that only compatible ordnance items are stored in each facility. As

JA1-252
N61339-97-C-0001
P00093

allowed by OP-5, Non-DoD owned/controlled explosives may be stored in AUTEC's facilities subject to approval by COMNAVSEASYSCOM.

14. The Contractor shall allow Range User access to the Sonobouy Locker (AUTEC Facility 1032), located at the heliport at Site 1 on Andros

Island, as described in Chapter XXI(1) of this Specification.

The Contractor shall be responsible for performing the following sonobuoy-related tasks:

a. Receipt inspections/transport/storage.
b. Inventory/usage before/after Range User access.
c. Inventory/usage reporting per CHSWLINST 3120.2 (Series).
d. Transport/disposal of sonobuoy shipping containers

15. The Contractor shall provide an adequate staff of persons qualified to perform the following tasks:

a. Develop and maintain an inventory of Government-provided consumables, expendables, and repair/spare parts to support all the tasks described in this Chapter in accordance with the policies provided in Chapter XX(1) of this Specification.

b. Provide technical support to Purchasing for procurement of equipment to support the tasks described in this chapter including: specification writing; technical evaluation of proposals; cost review; quality review; technical qualification of sources; preparation of inspection and acceptance procedures; and conduct of acceptance tests.

c. Study operational problems and recommend solutions including preparing or revising operating, installation, or maintenance documents. Periodically review documentation for accuracy. Prepare training materials and equipment checklists.

d. Investigate reliability, maintainability, and/or performance problems with existing equipment and provide recommendations and other necessary support to SE&A (see Chapter XVI of this Specification) as required to assist in the correction of such deficiencies.

16. The Contractor shall annually review all locally-prepared AUTEC documents (OCD/SOPs, etc.) which pertain to exercise ordnance preparation/storage/handling/post-run/etc. and compare the contents thereof to information contained in the latest version(s)/revision(s) of the authoritative source/reference publication(s) cited in the front matter/text. The Contractor shall expeditiously correct/update AUTEC's documents to reflect any procedural or requirements changes. The Contractor shall advise NUWC that such annual reviews have been completed.

17. The Contractor shall collect data, maintain records, and prepare/submit all relevant reports required by COMNAVSEASYSCOM and NUWC as described in the Applicable Documents cited in paragraph F. Conventional Ammunition Integrated Management System (CAIMS) reports shall be submitted in accordance with requirements contained in Chapter XXI(1) of this Specification. The Contractor shall assist NUWC in the conduct of any ordnance related inspections, surveys, audits, etc.

as may be required/conducted by outside authority. The Contractor shall respond promptly to any special requests for data/reports.

18. The Contractor shall submit all NUWC-required technical and administrative reports, described in Chapter XXV of this Specification, as pertain to support for AUTEC's exercise ordnance functions.

## D. WORKLOAD FACTORS

1. Typical operations that may occur simultaneously are: Helicopter loadout of MK-30 Mobile Targets or helicopter offload of recovered targets or exercise vehicles; exercise weapon/mobile target loadout/offload of AUTEC vessels; MK-48/MK-46 EXTORP post-run; MK-46/50 REXTORP prep/post-run; sonobuoy inventory/issue accounting; CAIMS transaction reporting; and MSC barge onload/offload.

2. Average estimated prep/post-run workload: Factors are as established by the AUTEC Schedule of Operations and published Operational Directives. (Note: The MK 48 Mod 6 Exercise Torpedo requires approximately one additional hour of post-run flushing compared to its predecessor, and accounts for approximately 40% of the MK 48 workload in FY 01. This is expected to be near 100% by FY 03.).

| ACTION REQUIRED | VEHICLES/MONTH | | | |
|---|---|---|---|---|
| | REXTORPS MK 46/MK 50 | MK 46/MK 50 EX TORPS | MK 48/ADCAP EX TORPS | OTHER |
| Prep for Run | 21 | - | - | - |
| Post Run | 25 | 6 | 30 | 4 |
| 20th Run "I" Level Maintenance | 2 | - | - | - |

3. Peak estimated prep/post-run workload: Peak periods are defined in both weekly and monthly terms for different vehicle types. Typically, monthly peak periods for specific vehicle types will be limited to once per quarter. A peak during any particular week may not necessarily result in a peak workload for the month. Peak periods for different vehicle types will not be scheduled by the Government to occur simultaneously.

In aggregate, the Contractor is expected to support peak workloads as described below. The Contractor may, based upon experience, agree to support a higher peak workload for a specific vehicle type during a given period, provided that the Government agrees to an offsetting peak workload reduction for other vehicles during the same period.

| ACTION REQUIRED | VEHICLES PER: WEEK/MONTH | | | |
|---|---|---|---|---|
| | REXTORPS MK 46/MK 50 | MK 46/MK 50 EX TORPS | MK 48/ADCAP EX TORPS | OTHER |
| Prep for Run | 18/32 | - | - | - |
| Post Run | 17/44 | 10/16 | 20/30 | 4/16 |

4. For MK-48 Mods 5 and 6 Exercise Torpedoes, removal of recording media requires approximately 30 minutes. For the MK 48 Mod 4, the time required is approximately 90 minutes.

5. MK-30/other mobile target handling requirements may be estimated using information presented in Chapter VIII of this Specification.

6. Typical workload factors for vessel onload/offload of exercise weapons/mobile targets:

| ACTION REQUIRED | EXPECTED PERIODICITY OF EVENTS | | | |
|---|---|---|---|---|
| | WEEKLY | MONTHLY | YEARLY | ORDNANCE HANDLING CERTIFIED PERS REQUIRED |
| MSC Barge Onload | 1 | 3 | 33 | 11 |
| MSC Barge Offload | 1 | 3 | 33 | 11 |
| AUTEC Vessel Loadout | 5 | 12 | 150 | 8-11* |
| AUTEC Vessel Offload | 6 | 15 | 150 | 8-11* |

| |
|---|
| *Vessel Dependent |

7. It is estimated that approximately 200 individual vehicles (i.e. mobile targets/exercise torpedoes/etc.) will be recovered by helicopter each year. Normally, six (6) Ordnance Handling Certified personnel are required to move such vehicles between the Site 1 heliport and AUTEC's Torpedo Facility.

8. Other events, such as movement of exercise weapons/ordnance/etc., to/from the Andros Town Airport, or to/from or between the Site 1 magazine storage or work areas, normally require seven (7) Ordnance Handling Certified personnel.

9. Scheduled daily check-outs, and routine preventative maintenance, inspections, calibrations, etc., for assigned equipment and systems are estimated to require approximately 4,700 work-hours per year.

10. Typically, Range Users consume approximately 425 Sonobuoys per month.

11. Explosives/pyrotechnics/storage and staging areas:

| FACILITY | | Allowed Explosive Loading | |
|---|---|---|---|
| Number | Description | Net Explosive Weight Lbs. (#) By Class.Division | Class.Division or Description |
| 1005 | Helo Loading/Downloading Staging Area | 13.26#/24# | 1.3/1.4 |
| | | or 590# | Energetic Liquid |
| 1026 A&B | Ready Service Lockers | 99# Each | 1.3 |
| 1027 | Heloport Recovery Area | 82# or 6.63#/2.33# | 1.1 or 1.3/1.4 |
| | | or 562# | Energetic Liquid |
| 1029 | Heloport Torpedo Staging Area | 13.26#/24# | 1.3/1.4 |
| | | or 590# | Energetic Liquid |
| 1624 | Butler Building | 74# | 1.4 |
| 1641 | MK-48 Turnaround | 691# | 1.4 |
| 1681 | STINGRAY Building | 100# (total) | 1.3 & 1.4 |
| 1682 | SPEARFISH Facility | 176# | 1.1 |
| 1683 | STINGRAY Facility | 100# (total) | 1.3 & 1.4 |
| 1684 | Post-Run Facility | 100# | 1.4 |
| | | or 10,500# | Energetic Liquid |
| 1692 | STINGRAY De-Prep Facility | 6.63# | 1.3 C |
| 1802 | Above Ground Magazine | 5,000# (total) | 1.3 & 1.4 |
| 1803 | Above Ground Magazine | 5,000# (total) | 1.3 & 1.4 |
| 1804 | Earth Covered Magazine | 150# or 5,000# | 1.1 or 1.3 |
| 1902 | Pier | 176# or 300# (total) | 1.1 or 1.3 & 1.4 |
| 1910 | Harrison Wharf | 143.5#/1,000#/500# | 1.1/1.3/1.4 |

Legend: 1.1 = Mass Detonation; 1.2 = Non-mass detonating - fragment producing; 1.3 = Mass fire, minor blast or fragment;

1.4 = Moderate fire, no blast; 1.5 = Very insensitive substance;

1.6 = Extremely insensitive article; Energetic Liquid = OTTO Fuel II.

Reference: OP 5 Vol 1 Current Rev. Chapter 3 Characteristics of Ammunition, Explosives and Related Hazardous Materials.

## E. KEY PERSONNEL/PERSONNEL QUALIFICATIONS

None

## F. APPLICABLE DOCUMENTS

| | |
|---|---|
| OPNAVINST 8023.2 (Series); | U.S. Navy Explosives Safety Policies, Requirements, and Procedures (DoN Explosives Safety Policy Manual) |
| SPCCINST 8020.12 (Series); | Supply Management of Ammunition: Policy, Procedures, and Responsibilities. |
| NAVFAC P-307; | Management of Weight Handling Equipment |
| NAVSEA 6340-AA-MMA-010; | Technical Manual for OTTO Fuel II Safety, Storage, and Handling Instructions |
| NAVSEA SW 850-EA-MM-050; | Employment Procedures: TOMAHAWK Test Vehicles |

| | |
|---|---|
| NAVSEA SW 512-AD-ASY-010/MK-46 FLT ACCESS; | Assembly Instructions for MK-46 Torpedo/MK-46 REXTORP Flight Accessories |
| NAVSEA SW 515-AG-MM1-010/MK-46 REXTORP; | Maintenance Manual Intermediate Level for MK46 Recoverable Exercise Torpedo (REXTORP) |
| NAVSEA SW 516-AA-MMM-040/U MK-50; | Technical Manual for Torpedo MK-50 Mod 0 Quality Assurance/Shop Traveller for Storage and Issue of Organizational Maintenance |
| NAVSEA SW 516-AB-MMO-010/MK-50 REXTORP; | Technical Manual for REXTORP MK-50 Organizational Maintenance |
| NAVSEA SW 516-AC-MMI-010/MK-50 REXTORP; | Technical Manual for Recoverable Exercise Torpedo (REXTORP) MK-50 |
| NAVSEA SW 515-AA-PRO-010/Flush MK-48; | Torpedo MK-48 Flushing Procedures |
| NAVSEA SW 515-AC-PRO-010/MK48 ADCAP; | Torpedo MK-48 ADCAP Flushing Procedures |
| NAVSEA SW 023-AH-WHM-010; | Handling Ammunition and Explosives With Industrial Materials Handling Equipment (WHE) |
| NAVSEA SW 020-AF-ABK-010; | Motor Vehicle Driver and Shipping Inspections Manual For Ammunition, Explosives and Related Hazardous Materials |
| NAVSEA OP-5; | Ammunition and Explosives Ashore Safety Regulations for Handling, Storing, Production, Renovation, and Shipping |
| NAVSEA OP 2173, Vols. 1 and 2; | Approved Handling Equipment for Weapons and Explosives |

| | |
|---|---|
| NAVSEA OP 4024, Vol. 3, Part 2G w/Local Change No. 001-93; | Heavyweight Torpedo Submarine Tenders (AS) and Shore Facilities Ready for Issue Activities |
| CHSWLINST 3120.2 (Series); | Atlantic Undersea Test and Evaluation Center (AUTEC) Sonobuoy Usage Procedures |
| OCD-(09.1)-00-XX; | Hazards of Electromagnetic Radiation to Ordnance (HERO) Emissions Control (EMCOM) Bill |
| OCD/SOP-(09.1)-02-XX; | Explosives Handling/Transporting Training and Qualification/ Certification Program |
| OCD-(09.1)-29-XX; | Guide for Ammunition Transaction Report |
| OCD/SOP-(09.1)-58-XX; | Explosives Handling, Storage, and Magazine Inspections |
| OCD/SOP-(09.1)-61-XX; | Transporting/Transferring/Receiving Explosives at NUWCDETAUTEC, Andros Island |
| OCD/SOP-(09.1)-62-XX; | MK-46; MK-48/MK-48 ADCAP Post-Run Operations in Building 1684 Torpedo Post-Run Facility |
| OCD-(13.1)-01-XX; | Management of Shore-Based Weight Handling Equipment |
| Other OCDs; | Relevant/Related OCDs as may be listed in Table XV-4 |
| APP 11-5G; | Hurricane Plan, Andros Ranges |

AUTEC Hazardous Waste Management Plan (latest version)

AUTEC Installation Spill Contingency Plan (latest version)

WEAPON PREPARATION/POST-RUN EQUIPMENT

| Equipment | Model No. | Qty. |
|---|---|---|
| Flushing Stands MK-48/MK-48 ADCAP | 5978010 | 2 |
| Flushing Systems Pumps MK-46, Portable | 199284 | 2 |
| MK-48 Shipping Containers | N/A | 100* |
| MK-46 Shipping Containers | N/A | 100* |
| MK-50 Shipping Containers | N/A | 100* |
| Miscellaneous Shipping Containers | N/A | 10* |
| - - - - - *deleted* - - - - - | | |
| Drums, 55 Gal (OTTO Fuel Waste) | N/A | 100* |
| Breathing Apparatus, Portable | PB5502 | 1 |
| Breathing Apparatus, Self Contained | 2840-2 | 3 |
| Dolly, Universal | 1473441 | 30 |
| Vane Vacuum Pumps | LD620161 | 4 |
| Vand Systems | 1874091/KPT7203 | 2 |
| Pressure Cleaner | 760 | 1 |
| OTTO Fuel Vapor Detectors | MK15 Mod 0 | 2 |
| Liquid Waste Holding Tank, 4,000 Gal. | N/A | 1 |
| Liquid Waste Holding Tanks, 900 Gal. | N/A | 3 |
| Liquid Chemical Holding Tanks, 300 Gal. | N/A | 3 |
| Waste Transfer Pumps, Air-Driven | 30827A55 | 2 |
| Waste Transfer Pumps, Electric | 1X1-1/2X5QT | 2 |
| Compactor, Solid Waste | PAX | 1 |
| Hydrostatic Test Pump | S/N 0647 | 1 |
| Vacuum Pump | RA0025 | 1 |
| Vacuum Tank | N/A | 1 |
| Vacuum Turbine | 30107C | 1 |
| Rollers, Breakdown (Pairs) | N/A | 2 |
| Rollers, Flushing (Pairs) | N/A | 2 |
| Rollers, Wash-Down (Pairs) | N/A | 2 |
| Parts Washers, Graymill | Clean-o-matic | 2 |
| Burnisher, Portable | N/A | 1 |
| MK-48 Data Extraction Lines | N/A | 2 |
| Presetters, MK-46/50 REXTORP | N/A | 2 |
| REXTORPS, MK-46/50 | N/A | 60* |
| Miscellaneous Weapons Slings | - | - |
| Miscellaneous Hand Tools | - | - |

Table IX-1

* Typical on-hand quantity

Table IX-1

# IX. ORDNANCE SUPPORT (CONT)

## 2. LAUNCH AND RECOVERY SERVICES

### A. GENERAL

A significant portion of AUTEC's workload involves the conduct of tests designed to assess the performance of developmental or in-service torpedoes, other undersea vehicles, and combat systems, and the proficiency of Fleet personnel in employing these systems. Such tests typically involve the use of mobile targets, and the launching of exercise or dummy weapons.

To support such tests, AUTEC had developed the capability to launch and recover mobile targets and exercise weapons/test vehicles using either the Contractor's helicopters or selected AUTEC range craft.

### B. DESCRIPTION

The Contractor's helicopters can be equipped with an AUTEC Helicopter Launcher to allow air-launching (at low altitude) of MK-30 Targets. The RANGEMASTER (TWR-501) and the M/V RANGE ROVER are both equipped with a Telescopic Target Launcher System (TTLS) for launching either MK-30 or MK-40 (UK) Targets. These launchers are attached to arms, similar to articulated hydraulic cranes, and are suspended over the stern of the launching vessel. In addition, the M/V RANGE ROVER can be fitted with a Swimout AUTEC Launcher (SAL) for use with various RDT&E/FOT&E vehicles.

The M/V RANGER is equipped with a modified MK-59 Submarine Torpedo Tube and an air-over-water impulse ejection system, as well as with a MK-32 Mod 17 Above Water Torpedo Tube (AWTT). The MK-59 Torpedo Tube is installed below the ship's waterline and emulates an actual submarine launch system. The M/V RANGER also has internal (below deck) storage for eight test vehicles, and an internal weapon handling system and torpedo tube re-load capability.

Pre-launch target/weapon warm-up power, synchronous and non-synchronous run inputs, status monitoring, launch commands, and post-launch wire-guide control (as applicable) are effected using portable Launch Control Boxes (for MK-30 Targets) or Fire Control Systems (for torpedoes) which interface to the weapons/targets and launcher systems through umbilical (e.g. A and B) cables and guidance wires. Launch Control Boxes are part of the MK-30 Target Program Special Support Equipment (SSE) listed in Table VIII-2 of this Specification. Portable Fire Control Systems, for the pre-setting/control of exercise torpedoes and test vehicles, are provided by the Range User.

Actual fire control, weapon and launcher signal timing, and dynamic launch operation and response functions for the MK-59 Torpedo Tube can be monitored using a portable Torpedo Tube Instrumentation (TTI) system. A TTI system consists of strip chart recorder, various transducers and electrical pick-ups, a velocity measuring device and equipment to interface with the launch system. TTI systems measure and record all electrical voltages and signals required to warm-up/launch a vehicle, the impulse pressure at launch, vehicle velocity and acceleration, and post-launch signals transmitted/received on the vehicle's guidance wire (if applicable). Analysis of recorded data can define launch system performance.

Typically, vehicles launched at AUTEC are positively buoyant and float to the surface at end-of-run, and are recovered, either by helicopter or range vessel for subsequent return to Site 1. The Contractor's helicopters can be equipped with various recovery cages for the end-of-run retrieval of both mobile targets and exercise weapons. The RANGEMASTER (TWR-501) is AUTEC's primary recovery vessel, however, both the M/V RANGER and the M/V RANGE ROVER can be equipped with a Ramp Recovery System for retrieval operations. The Ramp Recovery System, combined with the large size of these two vessels, allows recovery operations to be conducted in heavy weather conditions, with winds up to 30 knots.

Most exercise weapons recovered at AUTEC are launched from Fleet platforms operating on the Weapons Range. Occasional recovery services are required to support special tests conducted in the open ocean or at remote test sites.

Table IX-2 provides a representative listing of launch and recovery systems and equipment. Actual inventory is as provided by NUWC.

## C. CONTRACTOR RESPONSIBILITIES

1. With the exception of the SAL, the Contractor shall maintain all of AUTEC's weapon/target launch and recovery systems/equipment and related test equipment in an operational status except during scheduled maintenance periods authorized by NUWC. The Contractor shall ensure that routine preventative maintenance is conducted on a not-to-interfere basis with scheduled operational requirements, except that the SAL shall be maintained in a stand-by/caretaker status. On ninety days notice, the Contractor shall make the SAL operational. The Contractor shall provide support for AUTEC's weapon/target launch and recovery requirements in accordance with the AUTEC Schedule of Operations, published Operations Directives, Workload Factors given in paragraph D, Applicable Documents cited in paragraph F, and other requirements stated below. Special requirements may be tasked by NUWC Work Order or Letter of Direction.

2. The general approach to accomplishing AUTEC's launch and recovery systems requirements is that routine day-to-day tasks shall be performed by the Contractor. Arrangements for manufacturer or other procured services to support occasional, extraordinary, or specialty requirements related to this work area shall be made by the Contractor on a case-by-case basis considering cost effectiveness, schedule, or other requirements as approved by NUWC.

3. The Contractor shall maintain, check-out, calibrate, and operate all of AUTEC's weapon/target launch and recovery systems and equipment in accordance with the standards and procedures established by applicable OCDs and other documents cited in paragraph F and/or as delineated in maintenance and operation manuals provided by equipment manufacturers.

4. The Contractor shall abide by the AMS for the preventative maintenance of all existing AUTEC weapon/target launch and recovery systems and equipment. Generally, equipment operators shall be capable of performing preventative maintenance. Preventative maintenance of new equipment shall be based on manufacturer-recommended procedures and/or new AMS procedures to be developed by the Contractor.

5. With the exception of the Torpedo Tube Instrumentation (TTI) system, the general approach to corrective maintenance of Weapon/Target Launcher Systems equipment shall be to restore all equipment to operational status as quickly as possible by replacement of components and subassemblies. The components/sub assemblies may then be repaired by either the Contractor or the manufacturer or others, whichever NUWC deems to be most cost effective. The Contractor shall provide for operational maintenance of the TTI system(s) provided, as allowed by COMNAVSEASYSCOM letter ser 0662T/219 of 17 Oct 1990. TTI system repairs, modifications, upgrades, and periodic recertification shall be performed by NUWC Division Newport Code 75. It is the Contractor's responsibility to forward the TTI system to NUWC in a timely manner.

6. The Contractor shall provide an adequate staff of persons qualified to perform the following tasks:

a. Develop and maintain an inventory of Government-provided consumables, expendables, and repair/spare parts for all launch/recovery systems/equipment in accordance with the policies provided in Chapter XXI (1) of this Specification.

b. Provide technical support to Purchasing for procurement of launch/recovery systems/equipment including: specification writing; technical evaluation of proposals; cost review; technical qualification of sources; preparation of inspection and acceptance procedures; and

conduct of acceptance tests.

c. Diagnose system failures; restore system operation, and repair items as appropriate. These personnel shall be generally capable of supporting engineering changes, preparing documentation, performing equipment modifications, and installing and testing new equipment.

d. Study operational problems and recommend solutions including preparing or revising operating, installation, or maintenance documents. Periodically review documentation for accuracy. Update preventative/corrective maintenance documentation/practices when needed. Prepare training material and equipment installation checklists.

e. Investigate reliability, maintainability, and/or performance problems with existing equipment and provide recommendations and other necessary support to SE&A (see Chapter XVI of this Specification) as required to assist in the correction of such deficiencies.

f. In accordance with procedures addressed in relevant OCDs, support AUTEC's Configuration Management and Configuration/Drawing Control Systems requirements as relate to launch/recovery systems/equipment. Provide/maintain complete and accurate engineering drawings, equipment technical (operating, maintenance, etc.) manuals, parts lists, and other requisite documentation. Prepare/submit relevant Modification Proposals (Mod Props), Equipment Addition/Deletion Notices, Requests for Document Change, Document Change Notices, engineering cost estimates, etc..

g. Arrange for manufacturer or other procured support of launch/recovery systems/equipment on a case-by-case basis considering cost effectiveness and mission critical requirements as approved by NUWC.

7. The Contractor shall develop/maintain/deliver all required drawings, equipment manuals, studies, failure investigations/analysis, and other documents discussed above, and others as may be requested by NUWC, in a timely manner. Delivered documents shall be complete and accurate.

8. The Contractor shall provide a Weapon/Target Launcher Engineer. This engineer shall be qualified to perform and/or oversee the following tasks for launcher systems/equipment:

a. Fault isolation.

b. Corrective actions.

c. System alignment/calibration

d. New equipment installation and Operational Acceptance Testing.

e. Equipment modifications including pre-requisite modification proposals.

f. The conduct of special studies and preparation of technical reports regarding equipment performance and improvement.

g. Preparation and review of technical documentation.

h. Providing technical assistance to the Systems Requirements and Integration Engineering group.

i. Providing NUWC Work Order support.

j. Providing technical interface with NUWC/other activities.

9. During launch operations, the Contractor shall provide at least one (1) competent launcher system technician who shall be responsible for all phases of Weapon/Target launching, including: launcher loading; umbilical, A + B cables, and guidance wire (if applicable) connection and check-out; and initiation/operation of the launch sequence. During both shipboard and helicopter operations, assistance may be provided by properly instructed crew members.

10. The Contractor shall provide support to install, check-out, and operate TTI system(s) in support of MK-59 Torpedo Tube planned maintenance tests, launcher pre-test check-outs, and during selected Weapon/Target launch tests, and to interpret resultant recordings/diagnose launch sequence/launch system problems.

11. The Contractor shall perform vessel torpedo/target retrieval services in accordance with the requirements/procedures contained in OCD-(09.2)-00-XX.

12. The Contractor shall perform helicopter torpedo/target retrieval services in accordance with the requirements/procedures contained in NAVSEA SW 591-BO-MMO-010/WPN RCOV SYS, or OCD-

(09.2)-11-XX, as appropriate.

13. The Contractor shall perform recovery of RDT&E/FOT&E and special test vehicles in accordance with the requirements/procedures contained in OCD-(09.2)-53-XX and any other such procedures as will be provided/developed.

14. The Contractor shall perform recovery of MK-50 vehicles in accordance with the requirements/procedures contained in NUWCDIVNPT SOP No. T-10.

15. The Contractor shall assure that all personnel working with OTTO Fuel meet the physical requirements given in NAVSEA TM S 6340-AA-MMA-010.

16. The Contractor shall follow response procedures cited in Chapter XXII (2) of this Specification in the event of a spill of OTTO Fuel or other hazardous substance during launch/recovery operations.

17. The Contractor shall assure that all weapon/target launch/recovery WHE/MHE, including slings, pendants, exercise weapon nose cages, etc. are periodically inspected and tested, and that the load-carrying capacity is certified as required in Chapter XIII (1) of this Specification. Repairs shall be performed as required. The Contractor shall keep records of all inspection and maintenance actions performed for each piece of equipment.

18. The Contractor shall annually review all locally-prepared documents (OCDs, etc.) which pertain to weapon/target launch and recovery systems/equipment and compare the contents thereof to information contained in the latest version(s)/revision(s) of the authoritative source/reference publications(s) cited in the front matter/text. The Contractor shall expeditiously correct/update AUTEC's documents to reflect any procedural or requirements changes. The Contractor shall advise NUWC that such annual reviews have been completed.

19. The Contractor shall submit all NUWC-required technical and administrative reports, described in Chapter XXV of this Specification, as pertain to support of AUTEC's exercise weapon/target launch/recovery functions.

## D. WORKLOAD FACTORS

1. One person cannot simultaneously operate a TTI system and initiate/operate a launch cycle.

2. Two (2) shipboard launch evolutions, or one (1) shipboard and one (1) helicopter launch evolution must be supportable simultaneously.

3. MK-40 Target launches (in support of UK operations) are estimated at 10 per year from the TTLS.

4. MK-30 Target launches may be estimated using information presented in Chapter VIII of this Specification:

a. From TTLSs: 88%

b. From helicopter launchers: 5%

c. From the M/V RANGER MK-59 Torpedo Tube: 7%

5. RDT&E/FOT&E vehicle launches, as well as vehicle launches in support of AUTEC internal tests are estimated at 50 per year as follows:

a. From M/V RANGER MK-59/MK-32 Torpedo Tubes: 40

b. From the SAL, or helicopter launchers: 10

6. Range User-launched exercise weapons are estimated at 700 per year.

7. All launched units must be recovered expeditiously. The ratio of recovery for all units is: 25% by helicopter (primarily for MK-30 Targets and MK-46/MK-50/MK-48 ADCAP Torpedoes)/75% by range vessel.

## E. KEY PERSONNEL/PERSONNEL QUALIFICATIONS

1. Key Personnel: None.

2. Personnel Qualifications:

a. Weapon/Target Launcher Engineer. To successfully execute the responsibilities and tasks described, the person assigned should as a minimum:

1. Possess a BS Degree in Mechanical Engineering.

2. Have 10 years experience and progressive responsibility for the design, fabrication, and installation of heavy (10,000 lbs. plus) materials handling systems. Experience should include structural and

foundation design in steel and aluminum alloys, design of pneumatic and hydraulic systems and control systems. At least two years

experience should be in a marine environment. Be able to prepare technical documentation (e.g. specifications, drawings, technical reports).

3. Have excellent knowledge of the corrosion resistant properties and strengths of materials. Have excellent knowledge of pneumatic and hydraulic systems/control systems. Have a good working knowledge of electrical power and electronic control circuitry.

## F. APPLICABLE DOCUMENTS

| | |
|---|---|
| OPNAVINST 8023.2 (series); | U.S. Navy Explosives Safety Policies, Requirements, and Procedures (DON Explosives Safety Manual) |
| NAVSEA SW 395-AL-MMO-010/MK 429 Mod 1; | Technical Manual, Description, Installation, Operation, Maintenance and Illustrated Parts Breakdown-Air Charging Panel and Cabinet Assembly MK-429 Mod 1 |
| NAVSEA SW 395-AM-MMO-010/MK32 Mods 17/18; | Technical Manual Surface Vessel Torpedo Tube MK-32 Mods 17/18 Description, Operation, Maintenance, and Illustrated Parts Breakdown. |
| NAVSEA SG 420-CG-MMO-010/MK 9 Mods 0-3; | Description, Installation, and Operational Use Torpedo Loading Tray MK-9 Mods 0, 2, and 3 |
| NAVSEA SW 515-AO-PRO-020/MK 46; | Technical Manual for Firing Craft Procedures for Torpedo MK-46 Mod 1, Mod 2, and Mod 5 (Surface Vessel Torpedo Tubes) |

| | |
|---|---|
| NAVSEA SW 591-CO-MMO-010/LCHSYS MK 30 TGT; | Technical Manual, Operation and Maintenance Helicopter Launch System MK-146 Mod 0 (used with Mobile Target MK-30) |
| NAVSEA SW 581-C1-MMI-040/MK 30; | Technical Manual for Firing Craft Procedures Target Torpedo MK-30 Mod 1 |
| NAVSEA 6340-AA-MMA-010; | Technical Manual for OTTO Fuel II Safety, Storage, and Handling Instructions |
| NAVSEA SW 591-BO-MMO-010/WPN RECOV SYS; | Helicopter Weapon Recovery System MK-2 Mod 0/1 |
| NAVSEA SW 515-AO-PRO-010/MK 46; | Procedure Manual Localization and Recovery of Lightweight Torpedo |
| NAVSEA SW 900-AA-MMA-010/SURFRECNOSE CAGE; | Technical Manual, Description, Operation, Maintenance and Depot Overhaul for Torpedo MK-48 Surface Recovery Nose Cage |
| NUWCDIVNPT SOP No. T-10; | MK-50 Torpedo Retrieval and Post-Run Procedures-MK-50 Torpedo (Ring Net) Retrieval System |
| OCD-(09.2)-00-XX; | Target/Torpedo Recovery by Recovery Boats |

JA1-267
N61339-97-C-0001
P00105

OCD-(09.2)-01-XX;

MK 48 Mods 4/5/MK-24 (U.K) and MK-30 Target Launch from the RANGER

| | |
|---|---|
| OCD-(09.2)-03-XX; | Launching Advanced Lightweight/ Torpedoes MK-46 and MK-50 Weapons from MK-32, Mod 17 Torpedo Tube Aboard RANGER |
| OCD-(09.2)-11-XX; | Diver/Helicopter Recovery of Torpedoes/Targets |
| OCD-(09.2)-13-XX; | MK-30 Telescopic Target Launching |
| OCD-(09.2)-34-XX; | Helicopter Launch of MK-30 Targets |
| OCD-(09.2)-51-XX; | Swimout AUTEC Launcher |
| OCD-(09.2)-55-XX; | MK-40 Telescopic Target Launching |
| OCD-(09.2)-57-XX; | Helicopter Weapon Recovery System MK-2 Mod 0/1 |
| OCD-(09.2)-58-XX; | Helicopter Recovery of MK-50 Exercise Torpedoes |
| Other OCDs; | Relevant/Related OCDs as may be listed in Table XV-4 |

WEAPON/TARGET LAUNCH/RECOVERY EQUIPMENT

| Equipment | Model No. | Qty |
|---|---|---|
| Telescopic Target Launchers | - | 2 |
| Swim-out AUTEC Launcher | - | 1 |
| Submerged Torpedo Tube | MK-59 | 1 |
| Above Water Torpedo Tube | MK-32 Mod 17 | 1 |
| Helicopter Launch Systems | MK-146 Mod 0 | 3 |
| Helicopter Weapon Recovery Systems | MK-2 Mod 1 | 6 |
| MK-48 Torpedo Recovery Nose Cages (Surface Vessel Recovery) | - | 17 |
| MK-50 Torpedo Helicopter Recovery Net Systems | - | 2 |
| MK-46 Torpedo Recovery Nose Cages (Surface Vessel Recovery) | - | 15 |
| MK-46 REXTORP Recovery Nose Cages (Surface Vessel Recovery) | - | 8 |
| Diver Torpedo Recovery Bands | - | 2 |

Note: Helicopters, range craft, shore-based transportation equipment, cranes, etc. are discussed in various other chapters of this Specification.

Table IX-2

## X. RESERVED FOR FUTURE USE

### A. GENERAL

### B. DESCRIPTION

### C. CONTRACTOR RESPONSIBILITIES

### D. WORKLOAD FACTORS

### E. KEY PERSONNEL/PERSONNEL QUALIFICATIONS

## XI. RESERVED FOR FUTURE USE

### A. GENERAL

### B. DESCRIPTION

### C. CONTRACTOR RESPONSIBILITIES

### D. WORKLOAD FACTORS

### E. KEY PERSONNEL/PERSONNEL QUALIFICATIONS

# XII. ACOUSTIC TRACKING EQUIPMENT (ATE) AND TEST ELECTRONICS SUPPORT (ES) EQUIPMENT

## A. GENERAL

In order for AUTEC's In-Water Acoustic Tracking Systems to work, all objects or vehicles that are to be tracked must be equipped with acoustic transmitters, referred to as 'pingers". Pingers provide a burst of acoustic energy at a frequency/repetition rate within the hardware/software limitations of the in- water tracking system. Additionally, AUTEC maintains an extensive inventory of general and special purpose electronics equipment for installation aboard AUTEC or Range User vessels and aircraft, or for deployment at specific locations to support test operations. Most items are portable, and are frequently moved from place to place.

## B. DESCRIPTION

The two acoustic tracking transmitters most commonly used at AUTEC are the Weapon Pinger System for torpedoes and other unmanned vehicles, and the Shipboard Tracking Electronics, Portable (STEP) units used aboard submarines and surface vessels. STEP units interface with hull-mounted tracking transducers, specifically designed for 3-D tracking, which are permanently installed on some ships (and all AUTEC vessels), similar transducers which may be temporarily installed, and with various U.S. Navy shipboard fathometer (AN/UQN or AN/BQN) transducers. For some tests, a self-contained battery-powered device, called a PUTT, is attached externally on the ship's hull.

The MK-72 Weapon Pinger System is the Mod 0 Sonar Transmitter described in NAVSEA OP 3660. It is planned to phase-out the MK-72 pingers and phase-in MK-84 pingers by the end of FY-97. The MK-84 Mod 1 is described in NAVSEA SW 591-AD-MMO-010/SONXMTR 84/1.

AUTEC's Weapons Range is normally operated in an asynchronous mode. This basically means that vessel, weapon, or target pingers must merely be "turned-on", and the tracking computers will generate TSPI data. The range can also operate in a synchronous mode, with a slight increase in tracking precision. Synchronous tracking also allows tracking with one less hydrophone (3 vice 4). In the synchronous mode, a portable timing system, synchronized with the range tracking system time base, is brought aboard ship and used to initiate the T-0 pinger pulse. For weapons, targets, etc., a cable must be connected to the pinger, and the pinger synchronized before launch.

AUTEC’s acoustic Portable Tracking System (PTS) (see Chapter III (3) of this Specification) operates similarly to the Weapons Range, although the acoustic pinger signal format is different (PTS utilizes a unique Differential Phase Shift Keyed (DPSK) signal format). At present, ATE cannot be interchanged between PTS and the Weapons Range. Special equipment includes Limited Capability Shipboard Tracking Electronics, Portable (LCSTEP) and MK84 pingers modified to use with PTS.

Proper, reliable operation of the various pingers is absolutely critical to the success of any test conducted using the in-water tracking system. Because of this, AUTEC exercises stringent check-out, repair, calibration, and installation controls over all pinger assets. Range User exercise weapons are instrumented with 3-D tracking devices as they are being assembled at the various Fleet Weapon Intermediate Maintenance Activities (IMAs). Installation of 3-D tracking devices on Range User vessels is normally accomplished at the vessel's home port or other CONUS location. Subject to weather (Sea State) limitations, ships using PUTT can be instrumented off Site 1 on Andros Island. Ships with permanently installed pingers can be instrumented at Andros Island, although normal policy is to verify operation before arrival.

A pinger facility is maintained at Site 1 on Andros Island for pinger check-outs and installations related to MK-30 Targets, REXTORPS, AUTEC vessels, and Range User vessels when such installations cannot be accomplished CONUS. A larger facility is maintained at AUTEC's West Palm Beach, Headquarters. The West Palm Beach Facility provides for: component-level repair, overhaul, and certification of all of AUTEC's acoustic tracking equipment; procurement and acceptance of new tracking equipment and components; and CONUS installation of ATE aboard Range User vessels.

The Jacksonville, IMA function requires technical and logistical support of the Contractor's daily workload requirements in support of MK-46 REXTORP IMA (at Naval Air Station (NAS), and Andros Island, Bahamas), and vessel installations (in Port Canaveral, Florida, and Kings Bay, Georgia). Proximity to these functions and coordination with AUTEC headquarters in West Palm Beach, Florida, is essential to the effective performance of this task. As a result, this function shall be located at Government provided facilities in NAS, Jacksonville, Florida.

Table XII-1 provides a representative list of AUTEC's 3-D acoustic tracking equipment, including that which is specially modified for use with PTS. Actual inventory is as provided by NUWC.

General and special purpose electronics test support (ES) equipment encompasses all permanently installed communications and electronic navigation equipment aboard AUTEC's vessels, portable radios used aboard Range User vessels when conducting specific tests such as Surface Ship Weapon System Accuracy Trials, various radar beacons, HITS transmitters, LATR Participant Instrumentation Packages (PIPS), portable targets, etc. A representative list of ES equipment, including embedded Automatic Data Processing Equipment (ADPE), is provided in Table XII-2. Actual inventory is provided by NUWC. Many of AUTEC's ES systems share common components. Cross-referencing system configurations, described in the OCDs listed in Table XII-3, with the items listed in Table XII-2, provides an indication of the systems which can be assembled concurrently. Major, or unique items are described in the following paragraphs.

1. **Radar Beacons**. AUTEC maintains an inventory of 21 VEGA 306X/AN/DPN-78 400 watt radar beacons for installation aboard surface vessels, fixed wing aircraft, and helicopters. Beacons are used both to enhance the radar cross-section of an object (e.g.

radars can track at longer ranges) as well as to provide target identification to minimize the possibility of tracking an incorrect object.

2. **Hyperbolic In-Air Tracking System (HITS) Transponders**. An inventory of 40 modified VEGA 306X/AN/DPN-78 radar beacons is maintained to support HITS. The HITS transponders have a free running pulse position coder and each transponder emits one of 20 pre-set codes that identifies the platform it is installed on. Additionally, 20 transponders are equipped with an altitude encoder that provides target platform altitude.

3. **Mobile Acoustic Response System (MARS)**. MARS is a substitute acoustic target system, compatible with the MK-48 Torpedo, which can be used in lieu of a MK-30 Target. MARS is installed aboard several AUTEC vessels.

4. **Sonar Acoustic Target Source (SATS IV) and MAXI-SATS**. SATS IV (officially AN/WQM-6/6A(U)) is an acoustic target system compatible with a wide variety of U.S. and foreign Navy sonars. MAXI-SATS provides an additional lower frequency range capability. SATS IV and MAXI-SATS are both deployable from several of AUTEC's vessels, and consist of a transducer, suspendable to depths up to 500 feet, a winch and cable, and a shipboard electronic control and amplifier system.

5. - - - - - *deleted* - - - - -

6. **AN/SQQ-18A and AN/SQQ-46A Sonar Targets**. These battery-powered active sonar transponders, compatible with U.S. Navy Surface Ship Sonars can be suspended from a float to depths of 60 feet. They are primarily used as part of an over-all target system for surface ship ASW Weapon System Accuracy Trials (WSATs).

7. **MK-1 Mod 2 Torpedo Target**. A battery-powered active sonar transponder, compatible with the MK-46 and other torpedoes. They are primarily used in conjunction with the AN/SQQ-18/46A as part of the surface ship WSAT target system.

8. **WSAT Acoustic Target Transponder (WATT)**. A weighted, water-tight pressure vessel containing a MK-72 or MK-84 pinger and batteries. Primarily used as part of the surface ship WSAT target system, it provides 3-D acoustic track signals.

9. **Deck Transit (Modified Theodolite)**. Used aboard surface ships, primarily during WSATs, to determine ship's heading at time of weapon

firing.

10. **Portable ARGOS (PARGOS)**. A carry-aboard computer system with an RF receiver and modem, that can be used aboard surface vessels to display vessel position (tracking range grid or latitude/longitude), and the position, course, and speed of, and range/bearing to, a second object.

11. **MK-39 Mod 0 Expendable Mobile ASW Training Target (EMATT)**. EMATT is a small, hand-launched, expendable, self-propelled, torpedo-shaped target which can be used to support surface ship and aircraft ASW exercises. EMATTs are battery-powered, and are issued to AUTEC in ready-to-launch condition. No maintenance is required, although the batteries do have a finite shelf life.

12. ***- - - - - deleted - - - - -***

13. **Expendable Bathythermographs (XBTs)**. AUTEC has MK-9 and MK-12 XBT systems manufactured by Sippican Corp. These systems are mounted on various AUTEC vessels for determining sound velocity profiles in support of in-water tests. MK-9 and MK-12 XBTs provide depth vs. temperature record data on 3.5 inch diskettes. The MK-12 systems can also employ specialized probes for determining conductivity vs. depth or sound velocity vs. depth. The RANGEMASTER, RANGE ROVER, and M/V RANGER each have the capability to transmit record data back to AUTEC's Site 1 via VHF radio, using and RFXBT system. Each RFXBT system consists of two Kenwood TM-241A or TM-261A radio transceivers and two Kantronics KPC-3 terminal node controllers (i.e. radio modems).

14. **Portable Instrument Tracking Transducer (PITT)**. A system of floats and lines for attaching a WATT unit to a floating object which needs to be tracked. It has reserve buoyancy to prevent system loss should the test object flood and sink.

15. **Bounce Pinger**. An assembly containing a MK-72 or MK-84 pinger in a high pressure housing designed to sink at a fixed rate to a predetermined depth and then drop weights to return to the surface at a fixed rate used to provide track data indicating subsurface water currents.

16. **Anemometers**. Wind speed and direction indicating systems, AN/UQM-5, are installed at Sites 1 (2 systems), 2 and 3. Anemometer systems (R.M. Young Model D4503N) are also installed aboard AUTEC's larger vessels.

17. **Underwater Communications System, AN/UQC-1**. Clear voice, underwater telephone, installed on AUTEC's larger vessels.

18. **Portable Underwater Telephone, ATM-504A**. As above, but not permanently installed. May be used aboard AUTEC or Range User vessels.

19. **Sonobuoy Tracking System (STS) Test Vehicle**. A towable small boat which is equipped for 3-D acoustic tracking and which has a sonobuoy simulator installed. Used to calibrate the STS.

20. **TACAN.** TACAN (AN/URN-25) is a ground based navigation set intended to provide range and bearing information to aircraft equipped with TACAN navigational equipment. It consists of a transponder group and a control-indicator group of equipments. The TACAN is housed in a facility located near the utilities water catchment area at Site 1. A remote control-indicator display is located in the OCC of the command control building.

21. **NDB**. The (NDB) Non-Directional Beacon is a ground based assist to navigation. It is intended to provide bearing information to aircraft equipped with NDB equipment. The NDB electronics are housed in the same facility as the TACAN navigation set, but with a separate antenna and operates on a low band HF frequency.

22. **Sonobuoy Simulator**. The sonobuoy simulator (referred to as SRT-22) is a locally manufactured 1 WATT VHF transmitter intended to provide a sonobuoy simulation signal to the STS system. This unit is portable and is intended to be installed periodically on AUTEC vessels for the purpose of calibration and operational check-out of the Sonobuoy Tracking System.

23. **Global Positioning System (GPS)**. AUTEC has an interim Differential GPS (DGPS) system to provide Range Users with surface track of a vessel that will not be operating on any of the instrumented ranges. Correction data in RTCM-104 format is transmitted via a 1KW HF transceiver located in the Range Support Shop to HF/DGPS receivers installed aboard vessels operating in the Andros area. Positional data in NEMA-183 format is recorded on 3.5 inch diskettes for post-test reconstruction.

24. **Hydrographic Survey Fathometer** (Odom Echotrac DF3200). Hydrographic Survey Fathometer is an echo sounder intended to measure

and record accurate ocean depths. Its transducer may be installed, temporarily, aboard AUTEC's larger vessels in the 19" Pinger wells. The sounder provides a microprocessor controlled thermal printout of depths, and an ASCII output which may be archived on a PC, in conjunction with DGPS data, for area surveying.

25. **Participant Information Packages (PIPs).** The Large Area Tracking Range (LATR) is a DGPS-based in-air tracking system that provides TSPI data for aircraft and surface ships if they are equipped with a PIP. AUTEC has two such systems, one fixed system on Andros Island (see Chapter II (1) of this Specification), and one portable system (see Chapter III (3) of this Specification). PIPs are available in three formats: fixed wing aircraft; helicopter; and surface ship. Both systems use common PIPs. Basically, PIPs calculate object TSPI data continuously and, when interrogated, transmit this stored data to a base station through a VHF communications link. Each PIP has an electronic address which can be changed utilizing an EPROM programmer. Surface ship and helicopter PIPs are approximately 6 feet$^3$ in size and weigh about 55 lbs. Fixed wing aircraft PIPs are packaged to emulate an AIM-9 Missile and are attached to wing-mounted weapons pylons. Surface ship installations require positioning of small RF antennas and short runs of cable. Helicopter installations require removal of a small portion of the airframe and replacement with a similar piece containing an RF antenna.

26. **Towed Pinger Assembly (TPA**). TPAs are self-contained, battery operated MK-84 Pinger assemblies designed to be attached to towed arrays or other objects for which underwater track information is desired. Each TPA consists of four sections: a forward, bullet-shaped hollow fiberglass nose; a 4-inch diameter, 47-inch long aluminum body shell; an internal tray containing MK-84 Pinger electronics, batteries, and two 3-pin SEACON bulkhead-mounted connectors; and a hollow fiberglass tail section housing an ITC 1032 transducer.

## C. <u>CONTRACTOR RESPONSIBILITIES</u>

1. The Contractor shall maintain AUTEC's ES, ATE, and associated support equipment in an operational status sufficient to meet the requirements of the AUTEC Schedule of Operations. The Contractor shall ensure that routine preventative maintenance is conducted on a not-to-interfere basis with scheduled operational requirements. The Contractor shall support AUTEC's ES and ATE needs in accordance with the AUTEC Schedule of Operations, published Operations Directives, Workload Factors given in paragraph D, Applicable Documents cited in paragraph F, and other requirements stated below. Special requirements may be tasked by NUWC Work Order or Letter of Direction.

2. The Contractor shall prepare, and have available for installation, 3-D tracking pingers, beacons, HITS transponders, PIPs, etc. in such quantities, configurations, and at such locations as are required by the AUTEC Schedule of Operations and published Operations Directives.

3. The general approach to accomplishing AUTEC's ES and ATE needs is that routine day-to-day tasks shall be performed by the Contractor. Arrangements for manufacturer or other procured services to support occasional, extraordinary, or specialty requirements related to this work area shall be made by the Contractor on a case-by-case basis considering cost effectiveness, schedule, or other requirements as approved by NUWC.

4. The Contractor shall maintain, check-out, calibrate, install, operate, and, as appropriate, remove AUTEC's ES and ATE resources in accordance with the standards and practices established by applicable OCDs, locally prepared/approved Operating Maintenance Instructions (OMIs), other documents cited in paragraph F, and/or as delineated in maintenance and operation manuals provided by equipment manufacturers.

5. The Contractor shall abide by the AMS for all existing ES equipment. Preventative maintenance of new equipment will be based on manufacturer-recommended procedures and/or new AMS procedures to be developed by the Contractor.

6. The general approach to corrective maintenance of AUTEC's ES and ATE resources shall be to restore all equipment to operational status as quickly as possible by substitution of duplicate equipment or replacement of modules and sub-assemblies. The modules/sub-assemblies may then be repaired by either the Contractor or the manufacturer or others, whichever NUWC deems to be most cost effective. Depot-level support for LATR PIPs will be arranged for separately by the Government.

7. The Contractor shall provide an adequate staff of persons qualified to perform the following tasks:

a. Develop and maintain an inventory of Government-provided consumables, expendables, and repair/spare parts for all ES and acoustic tracking equipment in accordance with the policies provided in Chapter XXI (1) of this Specification.

b. Provide technical support to Purchasing for procurement of ES and ATE resources and components including: specification writing; technical evaluation of proposals; cost review; quality review; technical qualifications of sources; preparation of inspection and acceptance procedures; and conduct of acceptance tests.

c. Diagnose equipment failures; restore equipment operation, and repair items as appropriate. These personnel shall be generally capable of supporting engineering changes, preparing documentation, performing equipment modifications, and installing and testing new equipment.

d. Study operational problems and recommend solutions including preparing or revising operating, installation, or maintenance documents. Periodically review documentation for accuracy. Update preventative/corrective maintenance documentation/practices when needed. Prepare training materials and equipment installation checklists.

e. Investigate reliability, maintainability and/or performance problems with existing equipment and provide recommendations and other necessary support to SE&A (see Chapter XVI of this Specification) as required to assist in the correction of such deficiencies.

f. In accordance with procedures addressed in relevant OCDs, support AUTEC's Configuration Management and

Configuration/Drawing Control Systems requirements as relate to ES and ATE resources. Provide/maintain complete and accurate engineering drawings, equipment technical (operating, maintenance, etc.) manuals, parts lists, and other requisite documentation. Prepare/submit relevant Modification Proposals (Mod Props), Equipment Addition/Deletion Notices, Requests for Document Change, Document Change Notices, engineering cost estimates, etc..

g. Arrange for manufacturer or other procured support of ES and ATE resources on a case-by-case basis considering cost effectiveness and mission critical requirements as approved by NUWC.

8. The Contractor shall develop/maintain/deliver all required drawings, equipment manuals, studies, failure investigations/analysis, and other documents discussed above, and others as may be requested by NUWC, in a timely manner. Delivered documents shall be complete and accurate.

9. The Contractor shall collect data, maintain records, and prepare/submit all ATE-related reports required by COMNAVSEASYSCOM and NUWC. The Contractor shall assist NUWC during any ES or ATE-related inspections, surveys, audits, etc. required/conducted by outside authority. The Contractor shall respond promptly to any special requests for data/reports. Routine ATE reports include:

a. Daily: Tracking Range Equipment Management Information System reports delineating inventory transactions and status changes. Submitted by electronic means to NUWC Division Keyport, per PDMIS User's Manual, for inclusion in the pinger program data base.

b. As occurring: Engineering Field Failure Reports (bench failures), per OCD-(12)-45-XX.

c. As occurring: Acoustic Tracking Equipment Failure Reports (in-water failures), per OCD-(12)-45-XX.

d. Weapon Tracking Pinger Installation Completion Reports.

e. Shipboard Tracking Pinger Installation Completion Reports.

f. Monthly Progress Report; Pingers. Narrative report of the month's events, required by the 10th day of each succeeding month.

10. The Contractor shall maintain a system for control and reporting of the status, location, and planned utilization of all of AUTEC's ES and ATE resources. A visual display shall be maintained, and updated daily, at AUTEC's West Palm Beach, FL, Headquarters. Hardcopy reproduction of this display is required for record purposes. Provision of this information by computer display is acceptable.

11. The Contractor shall provide a training and certification program for personnel assigned to maintain/operate AUTEC's ES equipment in accordance with the requirements contained in OCD-(12)-42-XX. The Contractor shall additionally ensure that all such personnel read and understand the information listed in OCD-(12)-09-XX. The Contractor shall maintain a record of all such training and certification received by each individual. Personnel who have not been so certified shall not be permitted to conduct operations without supervision.

12. The Contractor shall provide a training and certification program for personnel assigned to maintain AUTEC's 3-D acoustic tracking equipment. Personnel assigned to perform maintenance, modifications, or repairs to 3-D acoustic tracking equipment, which involves soldering, shall be certified in accordance with the provisions of OCD-(15.3)-00-XX. Personnel assigned to perform ATE/QA functions shall be certified in accordance with the provisions of OCD-(12)-62-XX. The Contractor shall additionally ensure that all persons assigned to perform ATE/QA functions read and understand the information listed in OCD-(12)-62-XX. The Contractor shall maintain a record of all such training and certifications received by each individual. Personnel who have not been so certified shall not be permitted to conduct operations without supervision.

13. The Contractor shall provide a Quality Control/Quality Assurance Program for AUTEC's ATE program in compliance with NAVSEA TO 300-AM-ORD-010. See Chapter XVII of this Specification for further requirements.

14. The Contractor shall organize an Acoustic Tracking Equipment Material Review Board as described in NAVSEA TO 300-AM-ORD-010. The board

is responsible for determining the disposition (e.g. scrap, salvage, etc.) of non-conforming ATE.

15. The Contractor shall ensure the expeditious return of deficient or excess ATE from Site 1 on Andros Island, and from remote locations, to the facility in West Palm Beach or designated NAVSEA depot for repair, overhaul, and/or inventory purposes. All ATE equipment which must be shipped shall be properly packaged and marked for shipping to guard against damage or loss. A DD Form 1149, Shipping Document, shall be properly prepared for each such shipment to provide traceability.

16. The Contractor shall perform a receipt inspection of all new ATE equipment, components, and assemblies. No items shall be placed in inventory that are not satisfactorily tested. Inspection records shall be maintained in readily accessible history files.

17. The Contractor shall provide pinger technician support to install, check-out, and subsequently remove MK-72/MK-84 pingers for all Range User exercise weapons and/or other test vehicles, during unit assembly/disassembly. This requires:

a. Full-time support at the Yorktown, VA, submarine torpedo IMA. Technician(s) assigned at Yorktown, VA, shall be cross-trained for shipboard pinger installations/removals, and utilized (on a temporary basis) to perform such tasks at various U.S. Navy Fleet home port locations as may be judged to be cost effective (see also paragraph C.19 (below)).

b. Intermittent technician support at other Fleet torpedo IMA, and RDT&E vehicle prep sites: NAS, Jacksonville, FL; NUWC Division Keyport, WA; NUWC Division Newport, RI; etc.

18. The Contractor shall provide technician support to install, check-out, and subsequently remove, 3-D acoustic tracking equipment aboard Range User vessels in homeport or other CONUS locations on an as-required basis. Such technicians may either be permanently assigned in the local home port area, or assigned on a TDY basis, whichever is deemed to be most cost effective. The Contractor shall schedule such shipboard visits as are required, and promulgate an installation/removal schedule and subsequent installation/removal completion message for each installation. For such visits, the Contractor shall arrange for any necessary support by local U.S. Navy or contract divers for pinger installation/inspection or removal. The Contractor shall additionally arrange for related local Navy safety support as is deemed necessary. Occasional visits to shipyards to investigate vessels in drydock for future hull transducer installations or modifications will be required.

19. The Contractor shall ensure that ATE personnel, permanently or temporarily assigned at remote locations, prepare and input daily updates

to the Pinger Database Management Information System (PDMIS) as described in paragraph C.9 (above).

20. The Contractor shall provide personnel at Site 1 on Andros Island qualified to perform the following tasks:

a. Re-batterying, pre-installation check-out, installation, post-installation testing, and post-test removal of MK-72/MK-84 pingers for AUTEC's MK-30 Targets, REXTORPS and other unmanned vehicles as required.

b. Pre-installation check-out, installation, post-installation testing, operation, and subsequent removal of shipboard STEP units and associated 3-D acoustic tracking pingers aboard AUTEC and Range User vessels.

c. Occasional removal of MK-72/MK-84 pingers from Range User exercise weapons or other vehicles, prior to their return to the appropriate IMA, if such assets are needed elsewhere.

21. The Contractor shall install, check-out, maintain, and repair as necessary all communications and electronic navigation equipment used aboard AUTEC's vessels.

22. The Contractor shall provide for the pre and post-installation check-out and testing of all ES equipment installations to ensure proper operation.

23. Most of the electronic test support equipment operations described are carried out at Andros Island. Some travel may be required to CONUS shipyards, in order to instrument one of AUTEC's vessels, or to other CONUS locations, such as NAS Jacksonville FL, NAS Brunswick, ME, or the West Palm Beach, FL, International Airport to instrument Range User or AUTEC aircraft.

24. The installation of some ES equipment on AUTEC and Range User vessels will require high-work on ship's masts.

25. The Contractor shall submit all NUWC-required technical and administrative reports, described in Chapter XXV of this Specification, as pertain to support of AUTEC's ES and ATE requirements.

## D. WORKLOAD FACTORS

1. AUTEC's MK-72/MK-84 pinger inventory varies with losses and the status of new procurements. The nominal number is 450 pinger systems.

2. Approximately 50 Range User vessel pinger installation/removal evolutions are required each year. The Contractor shall provide sufficient personnel to accomplish installations/removals simultaneously at three (3) locations. A typical installation requires 12 work hours; removal 8 work hours; plus travel time when applicable. Typically, Range User installations/removals may occur as follows:

| | Per Year | | |
|---|---|---|---|
| Location | Install | Remove | Serving Location |
| Andros Island, Bahamas | 3 | 3 | Andros |
| New London, CT | 15 | 15 | Yorktown |
| - - - - - *deleted* - - - - - | | | |
| Norfolk, VA | 10 | 10 | Yorktown |
| Port Canaveral, FL | 1 | 1 | Jacksonville |
| Port Everglades, FL | 1 | 1 | WPB |
| King's Bay, GA | 15 | 17 | Jacksonville |
| Other | 5 | 5 | As Appropriate |

3. Andros Island pinger installation workload for MK-30 Targets and REXTORPS may be derived from the appropriate Workload Factors given in Chapters VIII and IX, respectively, of this Specification.

4. Approximately **930 preps, 900 installations and 250 re-certifications** of Range User exercise weapons, REXTORPS, Targets and other miscellaneous RDT&E/FOT&E vehicles are required each year. The Contractor shall provide full-time (e.g. assigned) installation technicians as indicated below. The Yorktown, VA MK-48 IMA requires one (1) full-time technician to meet its requirements on a continuous basis. Staging personnel at Yorktown, VA and Jacksonville, FL will support both exercise weapon and ship pinger installation requirements. The Contractor shall ensure capability to support at least one (1) other U.S. Navy Torpedo IMA/RDT&E vehicle preparation site simultaneously. **The term Heavy Weight (as used below) includes Ranger User MK-48 and ADCAP Preparation facilities. The term Light Weight IMA (as used below) includes REXTORP (MK-46 and MK-50), MK-46 ad MK-50 Exercise Torpedo preparation facilities.**

| Location | Work Description | Full-time | Estimated Nominal No. of Units | Estimated Peak No. of Units |
|---|---|---|---|---|
| Heavy Weight IMA, Yorktown, VA | | Yes | | |
| | Preps | | 28 | 43 |
| | Installations | | 25 | 43 |
| | Re-certifications | | 7 | 21 |
| Light Weight IMA, Jacksonville, FL | | No | | |
| | Preps | | 10 | 19 |
| | Installations | | 10 | 20 |
| | Re-certifications | | 1 | 3 |
| Andros Island, Bahamas | | No | | |
| REXTORPS | Preps | | 15 | 27 |
| | Installations | | 17 | 28 |
| | Re-certifications | | 0 | 1 |
| Targets, MK-30 | | | | |
| | Preps | | 15 | 30 |
| | Installations | | 14 | 31 |
| | Re-certifications | | 10 | 19 |
| West Palm Beach, FL | | Yes | | |
| | Preps | | 6 | 20 |
| | Installations | | 2 | 12 |

| | | | | |
|---|---|---|---|---|
| | Re-certifications | | 0 | 1 |

| Location | Full-time | Estimated Nominal No. of Units | Estimated Peak No. of Units |
|---|---|---|---|
| MK-48 IMA Yorktown, VA | Yes | 30/Mo. | 40/Mo. |
| Lightweight IMA Jacksonville, FL | No | 9/Mo. | 20/Mo. |
| Other | No | 4/Mo. | -- |

5. Subsequent to use, each pinger assembly shall be bench checked, tested, etc. within one working day following its return to inventory.
Nominal time required for a single pinger is estimated to be 2 work hours (less when doing several pingers concurrently).

6. Pinger repair/recertification is an as occurring workload. In addition to such work required for AUTEC's pinger inventory, additional repair/maintenance certification of other COMNAVSEASYSCOM ATE assets will amount to approximately 200 units/year.

7. An ATE equipment operator shall perform a pre-test verification of each test vessel installation just prior to the vessel transiting to AUTEC's Weapons Range area. Normally, the operator need not remain aboard. Operators will be required to remain on-board for selected RDT&E tests (est. 6 - 10 per year). Other workload factors may be derived from information given in Chapter IV(1) of this Specification.

8. Pinger Database System (PDS) shall be updated daily.

9. ES and ATE status displays shall be updated daily, with hardcopy provided to NUWC.

10. Removal, repair, and subsequent reinstallation of AUTEC vessel radios, fathometers, LORANS, GPS receivers, radars, etc, found to be defective is estimated to average one item per week.

11. Installation, check-out, and operation of other equipment is estimated as follows:

| Equipment* | Events/Mo. | Avg. Hrs/Event |
|---|---|---|
| Installation and Removal | | |
| LATR PIPs | | |
| • Helicopters | 6 (Peak 12) | 2.0 |
| • Vessels | 3 (Peak 8) | 3.0 |
| Radio, Radar, Ship Navigation Equipment | 4.0 | 16.0 |
| Radar Beacon/HITS Transponder | | |
| • Aircraft | 4.0 | 2.5 |
| • Vessels | 5.5 | 3.3 |
| Surface Ship WSAT | | |
| • Target Deployment | 0.4 | 9.0 |
| • Deck Transit (2) | 0.4 | 4.0 |
| • Additional Support for AEGIS-equipped ships | 0.4 | 16.0 |
| PARGOS Installations | 1.0 | 5.0 |
| Ranger User Communications | 5.0 | 4.0 |
| GPS/DGPS | 1.7 | 5.0 |
| SATS (2) | 0.6 | 12.0 |
| MAXI-SATS (3) | 0.6 | 14.0 |
| Launch Only | | |
| MK-39 Mod 0 EMATT | 1.25 | 2.0 |
| Operations | | |
| MARS | 2.0 | 9.0 |
| SATS IV (2) | 0.6 | 16.0 |
| MAXI-SATS (2) | 0.6 | 16.0 |
| XBTs | 11 | 1.0 |
| ATM-504A | 0.5 | 8.0 |
| SRT-22 | 1.25 | 12.0 |
| Hydrographic Survey Fathometer | 0.4 | 18.0 |
| Deck Transit (2) | 0.4 | 20.0 |
| Deployment and Recovery | | |
| PITT/WATT/JETT | 0.8 | 11.0 |
| Bounce Pingers | 0.8 | 9.0 |
| STS Towed Vehicle | 0.8 | 24.0 |

*- - - - - Redescribed at paragraph D.4. - - - - -*

* Note: Where appearing, number in ( ) indicate the minimum number of personnel necessary to perform a given task.

12. Each LATR Rotary Wing and Shipboard PIP shall be bench checked, tested, etc. following its return to inventory and prior to re-use. All PIPs determined to be defective shall be repaired using local spares as required. Items determined to be beyond local repair shall be sent to a depot repair facility designated by NUWC. Nominal time required for a single PIP is estimated to be 4 work hours.

## E. KEY PERSONNEL/PERSONNEL QUALIFICATIONS

1. Key Personnel: None.

2. Personnel Qualifications:

a. Electronics Test Support Technicians: To successfully execute the tasks and responsibilities described, the persons assigned should as a minimum:

1. Be a graduate of a formal two year course of study in electronics or have equivalent military training.

2. Have good understanding and ability to interpret schematic diagrams.

3. Have two years experience in troubleshooting, repair, and maintenance of electronics equipment.

4. Have good knowledge of the use of electronic test equipment, hand tools, and good mechanical ability.

5. Be familiar with Naval shipboard operations, terminology, customs, traditions, and protocol.

b. ATE Installation Technicians: To successfully execute the tasks and responsibilities described, the persons assigned should as a minimum:

1. Be a graduate of a formal two year course of study in electronics or have equivalent military training.

2. Have good understanding of and ability to interpret schematic diagrams.

3. Have two years experience in troubleshooting, repair, and maintenance of electronics equipment.

4. Have good knowledge of the use electronic test equipment, and tools, and good mechanical ability.

5. Be familiar with Naval shipboard operations, terminology, customs, traditions, and protocol.

## F. APPLICABLE DOCUMENTS

| | |
|---|---|
| NAVSEA OP 3660; | Sonar Transmitter MK-72 Mod 0 |
| NAVSEA TO 300-AM-ORD-010; | Quality Systems Requirements and Methods for Navy Weapons and Combat Systems |
| NAVSEA TM SW 591-AD-MMO-010/SONXMT R84/1; | Sonar Transmitter MK-84 Mod 1 |
| NAVSEA DWG 7083762 | Sonar Transmitter System MK-84 Mod 1 Bench Preparation Procedure, Phase-Coded and Tone Burst Modes |

| | |
|---|---|
| NAVSEA DWG 7083763 | MK-84 Mod 1 Sonar Transmitter Installation and Removal Procedures for MK-46 Mod 3/4/6 Exercise Torpedo |
| NAVSEA DWG 7087364 | MK-84 Mod 1 Sonar Transmitter Installation and Removal Procedures for MK-46 Rextorp |
| NAVSEA DWG 7083765 | MK-84 Mod 1 Sonar Transmitter Installation and Removal Procedures for MK-50 Rextorp |
| NAVSEA DWG 7083766 | MK-84 Mod 1 Sonar Transmitter Installation and Removal Procedures for MK-48 Ties 3/4 Exercise Torpedo |
| NAVSEA DWG 7083767 | MK-84 Mod 1 Sonar Transmitter Installation and Removal Procedures for MK-48 ADCAP Exercise Torpedo |
| NAVSEA DWG 7083768 | MK-84 Mod 1 Sonar Transmitter Installation and Removal Procedures for MK-30 Mobile Target |
| NAVSEA DWG 7083769 | Battery Readiness Recheck for MK-84 Mod 1 Sonar Transmitters in Lightweight Torpedoes |
| NAVSEA DWG 7083771 | Underwater Tracking System (UTS) Installations and Removals for STURGEON Class Submarines |
| NAVSEA DWG 7083772 | Underwater Tracking System (UTS) Installations and Removals for LOS ANGELES Class Submarines |
| NAVSEA DWG 7083773 | Underwater Tracking System (UTS) Installations and Removals for OHIO Class Submarines |
| NAVSEA DWG 7083774 | Underwater Tracking System (UTS) Installations and Removals for SEAWOLF Class Submarines |

| | |
|---|---|
| NUWDIVKPT; | Pinger Data Management Information System (PDMIS) User's Manual, Rev A, August 1992 |
| OCDs; | As listed in Table XII-3 |
| Other OCDs; | Relevant/Related OCDs as may be listed in Table XV-4 |
| OMI 80-1; | Deep Submergence Assembly |
| OMI 80-2; | WATT Pressure Vessel |
| OMI 80-4; | Raytheon Broadband Transducers |
| OMI 80-7; | Synchronous Tracking System Interface |
| OMI 86-3; | MK-72 Pinger Test Set Error Burst Simulator |
| OMI 86-4; | Calibration of MK-72 Mod O Sonar Transmitter Test Set |
| OMI 87-1; | Mobile Acoustic Response System |
| OMI 89-1; | MK-72 Pinger Sequencer |
| OMI 01-1; | Synchronous Tracking and Ranging System |
| OMI 01-2; | MK84 Mod 2 Towed Pinger Assembly |

## 3-D ACOUSTIC TRACKING EQUIPMENT

| Equipment | Mfr | Qty |
|---|---|---|
| Advanced Shipboard Tracking Electronics, Portable (ASTEP) | NUWC | 37 |
| Shipboard Tracking Electronics Portable (STEP) | AUTEC | 26 |
| Portable Underwater Tracking Transducer (PUTT) | NUWC | 3 |
| Deep Submersible | AUTEC | 2 |
| Transducer Test Tank | AUTEC | 1 |
| Transducer | RAYTHEON | 67 |
| Transducer | GENERAL MOTORS | 8 |
| | *- - - deleted - - -* | |
| Sync. Track Interface Unit | RCA | 2 |
| MK-72, Electronics | NUWC | 200 |
| MK-72, Freq. Select Unit A | NUWC | 200 |
| MK-72, Freq. Select Unit B | NUWC | 100 |
| MK-72, Freq. Select Unit C | NUWC | 8 |
| MK-72, Freq. Select Unit D | NUWC | 63 |
| MK-72, Freq. Select Unit E | NUWC | 17 |
| MK-72, Freq. Select Unit J | NUWC | 2 |
| MK-72, Transducer, A | NUWC | 300 |
| MK-72, Transducer, B | NUWC | 100 |
| MK-72, Transducer, C | NUWC | 8 |
| MK-72, Transducer, D | NUWC | 147 |
| MK-72, Transducer, E | NUWC | 67 |
| MK-72, Transducer, J | NUWC | 10 |
| MK-84 Mod 1, Transducer, K | NUWC | 75 |
| MK-84 Mod 1, Electronics | NUWC | 400 |
| Bounce Pinger | AUTEC | 3 |

Table XII-1

## 3-D ACOUSTIC TRACKING EQUIPMENT

| Equipment | Mfr. | Qty. |
|---|---|---|
| MK-84 Mod 1, Battery Box | AUTEC | 400 |
| MK-84 Mod 1, Matching Electronics, A | AUTEC | 400 |
| MK-84 Mod 1, Matching Electronics, B | AUTEC | 400 |
| MK-84 Mod 1, Matching Electronics, C | AUTEC | 400 |
| MK-84 Mod 1, Matching Electronics, D | AUTEC | 400 |
| MK-84 Mod 1, Matching Electronics, E | AUTEC | 400 |
| MK-84 Mod 1, Matching Electronics, K | AUTEC | 400 |
| MK-72, Alkaline Battery Pack | NUWC | 600 |
| MK-72, Test Set | NUWC | 12 |
| MK-72, Start-Stop Box | NUWC | 20 |
| MK-72, 23W14 Cable MK-48 | NUWC | 200 |
| Monitor | DUKANE | 20 |
| Dummy Load | AUTEC | 8 |
| Cable Continuity Checker | AUTEC | 7 |
| 3WPCAT Pressure Test FAC | NUWC | 2 |
| BBLF Pressure Test FAC | NUWC | 1 |
| BBLF Ambient Acoustic Test Tank | AUTEC | 1 |
| Pinger Sequencer ACN 3528 | AUTEC | 4 |
| Weapon Pinger Depth Sensor Cal System | AUTEC | 2 |
| Shipboard Transducer 3WPCAT | AUTEC | 50 |
| Towed Pinger Assemblies | AUTEC | 8 |
| WATT Units | NUWC | 8 |
| Polyurethane Molding Equipment | - | 8 |
| AN/BQN-17 Interface Panels | AUTEC | 10 |
| AN/BSY-1 Interface Boxes | AUTEC | 14 |
| AN/BSY-2 Interface Boxes | NUWC | 4 |
| MK-84 Leakage and Sensitivity Adapter | AUTEC | 10 |
| Shipboard Installer's Test Kit | AUTEC | 6 |
| Portable Test Kit (Weapon Pinger) | AUTEC | 2 |
| General Purpose Test Equipment | MISC. | 75 |
| Programmer/Verifier System | NUWC | 15 |
| Programmer/Verifier, Field | NUWC | 6 |

Table XII-1 (cont.)

## 3-D ACOUSTIC TRACKING EQUIPMENT

| Equipment | Mfr. | Qty. |
|---|---|---|
| **ACOUSTIC TRACKING EQUIPMENT MODIFIED FOR PTS USE** | | |
| Limited Capability | | |
| Shipboard Tracking | | |
| Electronics, Portable (LCSTEP) | NUWC | 16 |
| MK-84 Mod 1, Electronics | NUWC | 30 |
| Synchronizers | NUWC | 4 |

Table XII-1 (cont.)

## ELECTRONICS TEST SUPPORT EQUIPMENT

| Equipment | Mfr. | Model No. | Qty. |
|---|---|---|---|
| Adapter Communications | BLACKBOX | CMA02A | 7 |
| Amplifier | ELGAR | 501A | 1 |
| Amplifier Linear | DELTA ELECT. | 61055B | 7 |
| Amplifier Power | MCINTOSH | MC2300E | 2 |
| Amplifier Power | BRUEL | TYPE 2713 | 1 |
| Amplifier Power AF | MCINTOSH | MI-350 | 1 |
| Amplifier Power ASSY | WESTINGHOUSE | 10001-2854307 | 5 |
| Amplifier Stereo Power | MCINTOSH | MC2250 | 2 |
| Analyzer Signal Dynamic | HP | 35660A | 1 |
| Attenuator | AUTEC | JQI-23-AR14500 | 5 |
| Attenuator STEP | HP | 8494H | 4 |
| Beacon Radio EPIRB | ACR ELE | ACR/RLB-20 | 1 |
| Beacon Radio EPIRB | ACR ELE | ACR/RLB-23 | 7 |
| Binoculars Night Vision | MOONLIGHT | MPN30K | 1 |
| Binoculars 7X50 | HAYWARD | MK45 | 1 |
| Charger Battery | MOTOROLA | NLN6260A | 1 |
| Charger Battery | GEN IND | 511-2 | 1 |
| Charger Battery (1 UNIT) | MOTOROLA | NTN4734A | 5 |
| Charger Battery (6 UNIT) | MOTOROLA | NTN4796 | 2 |
| Charger Battery (6 UNIT) | MOTOROLA | 8990 | 1 |
| Charger Battery Portable | NAPA | 85-915 | 2 |
| Charger Battery 4 Station | MOTOROLA | NLN6480 | 1 |
| Charger/ANLZ/Cond Battery | MOTOROLA | TDN9430A | 1 |
| Computer MAC PLUS | APPLE | M0001A | 3 |
| Computer Notebook | SAGER | NP-942 | 2 |
| Computer PC Lap Top | ALR | VENTURE 386SS | 1 |
| Computer PC 386/33 | COMPUADD | A000 | 2 |
| Computer PC 486/33 | COMPUADD | A005 | 1 |
| Computer PC-AT/12 | JAMECO | JE 3008 | 7 |
| Control Remote (URC-94) | HARRIS | C-10206/URC-94 | 28 |
| Converter Protocol | BLACKBOX | IC456A-R2 | 1 |

Table XII-2

## ELECTRONICS TEST SUPPORT EQUIPMENT

| Equipment | Mfr. | Model No. | Qty. |
|---|---|---|---|
| LATR Aircraft Instrumentation Package Rotary Wing | SAIC | - | 12 |
| LATR Shipboard Instrumentaion Package (2 boxes) | SAIC | - | 12 |
| LATR Portable Test Unit | NAWC-WD | - | 2 |
| LATR BIT Support Station | SAIC | - | 1 |
| LATR Extended Built-In Test Support Station | SAIC | - | 1 |

Table XII-2 (Cont.)

## ELECTRONICS TEST SUPPORT EQUIPMENT

| Equipment | Mfr. | Model No. | Qty |
|---|---|---|---|
| Counter Frequency | TEK | DC 503A | 14 |
| Crimper MAXI | PALADIN | 1317 | 2 |
| CW Code Controller | AUTEC | HHI-23-AR16300 | 2 |
| | *- - - - - deleted - - - - -* | | |
| Data System MK-12XBT | SIPPICAN | MK-12 | 4 |
| Depth Fathometer | DATAMARINE | 2700 | 2 |
| Depth Fathometer Digital | DATAMARINE | LX300 | 9 |
| Depth Fathometer | RAYTHEON | F360D MK 11 | 1 |
| Depth Fathometer | AUTOHEL | ST50 | 1 |
| Depth Fathometer Digital | DATAMARINE | 2650 | 1 |
| Depth/Speed/Temp/Log | SIGNET | MK4000 | 1 |
| Drive CD-ROM External | SMS | CDU6250 | 1 |
| Drive CD-ROM External | SONY | CDU6251A | 2 |
| Filter Bandpass | TEK | AF501 | 1 |
| Filter DUAL HI/LO | WAVETEK | 852 | 3 |
| Generator Function | TEK | FG501 | 1 |
| Generator Function 2MHZ | TEK | FG 501A | 2 |
| Generator Ramp | TEK | RG-501 | 1 |
| Generator Target Radar | RAYTHEON | M28126 | 1 |
| Generator Tone Burst | AUTEC | JQI-23-AR14400 | 5 |
| Hailer Marine | STANDARD | C75 | 1 |
| Hailer Marine | RAYTHEON | RAY 350 | 3 |
| Hailer Marine | RAYTHEON | RAY 420 | 1 |
| Hailer Marine | RAYTHEON | RAY-400 | 2 |
| Hailer Marine | RAYTHEON | RAY-410 | 2 |
| Hydrophone Portable | AMETEK | SB46 | 3 |
| Hydrophone Portable | AMETEK | SB72 | 3 |
| Indicator Wind Spd&Dir | BENDIX | ID-586/UMQ-5 | 5 |
| Interface Compas GYRO | JAPN EL | NCT-22ST-1 | 1 |
| Interface Compas GYRO | JAPN EL | NCT-27 | 5 |
| Locator Reference DGPS | TRIMBLE | 4000RL | 1 |
| Loran C Navigator | APELCO | DXL 6300 | 1 |
| Loran C Navigator | MICROLOGIC | EXPLORER | 1 |

Table XII-2 (cont.)

Table XII-2 (cont.)

## ELECTRONICS TEST SUPPORT EQUIPMENT

| Equipment | Mfr. | Model No. | Qty. |
|---|---|---|---|
| Loran C Navigator | MICROLOGIC | ML-320 | 1 |
| Loran C Navigator | MICROLOGIC | ML-5000 | 2 |
| Loran C Receiver | RAYTHEON | RAYNAV 550 | 1 |
| Loran C Receiver | RAYTHEON | RAYNAV 780 | 2 |
| Mixer Audio Signal 3 INP | AUTEC | JQI-23-AR11000 | 4 |
| Mixer Audio Signal 6 INP | AUTEC | JHI-23-AR11100 | 2 |
| Modem Private Line | GENERAL | DESKTOP 202 | 3 |
| Modem Shore Data Link | GEN DAT | AQS-5341 | 3 |
| Modem Shore Data Link | GEN DAT | A9N-0045 | 1 |
| Modulator Data | CSI | DTM/00 | 3 |
| Modulator Pin | HP | 8403A | 1 |
| Modulator Test | HP | 8734B | 1 |
| Monitor - EGA 14 | RELISYS | RE5154E | 1 |
| Monitor Amber 12 CGA | CASPER | GM - 1277 | 6 |
| Monitor Color-VGA | COMPUADD | 51109 | 1 |
| Monitor Target Torpedo | EDO | MK-26 MOD 0 | 2 |
| Navigator DGPS w/Antenna | MAGNAVOX | MX200 | 7 |
| Navigator DGPS w/Antenna | MAGNAVOX | MX300 | 2 |
| Navigator GPS | MAGNAVOX | MX10 | 1 |
| Navigator GPS Handheld | MAGELLAN | GPS NAV5000D | 2 |
| Navigator GPS w/Antenna | MAGNAVOX | MX200 | 1 |
| Navigator GPS w/Antenna | RAYTHEON | RAYSTAR 920 | 1 |
| Navigator/KNTMTR/ DEADREC | DATAMARINE | 3200 | 1 |
| Oscillator | TEK | SG 502 | 20 |
| Oscilloscope | TEK | SC 501 | 5 |
| Pager Radio Keynote | MOTOROLA | A03CJC2468-AA | 2 |
| Panel Simulator Acoustic | WESTINGHOUSE | 10001-2854638 | 6 |
| Plotter Graphics | HP | 7451A | 2 |
| Power Module - Mainframe | TEK | TM 506 | 10 |
| Power Supply | KEPCO | ABC7-5-2 | 1 |
| Power Supply | PWRMATE | BPA-60H-V | 5 |

Table XII-2 (cont.)

## ELECTRONICS TEST SUPPORT EQUIPMENT

| Equipment | Mfr. | Model No. | Qty |
|---|---|---|---|
| Power Supply | KEPCO | JQE36-3M | 15 |
| Power Supply | KEPCO | JQE75-8M | 10 |
| Power Supply | DELTA ELECT. | 61056 | 5 |
| Power Supply Beacon | AUTEC | SPB-23-AR10300 | 14 |
| Power Supply Heavy Duty | NEWMAR | 115-12-35A | 6 |
| Power Supply Heavy Duty | NEWMAR | 115-12-6C | 4 |
| Power Supply Heavy Duty | NEWMAR | 115-12-8 | 4 |
| Power Supply Heavy Duty | NEWMAR | 115-24-15CD | 6 |
| Power Supply Heavy Duty | NEWMAR | 115-24-18A | 2 |
| Printer DOT MATRIX Wide | PANASONIC | KX-P2624 | 1 |
| Printer THINKJET | HP | 2225A | 2 |
| Programmer EPROM | JAMECO | JE680 | 1 |
| Radar Display Unit | FURUNO | FR-701 | 1 |
| Radar Display Unit | FURUNO | 1940 | 1 |
| Radar Marine Pathfinder | RAYTHEON | 1010EIND | 4 |
| Radar Marine Raster SCAN | RAYTHEON | R41XX | 1 |
| Radar Marine Raster SCAN | RAYTHEON | R73 | 7 |
| Radar Marine Raster SCAN | RAYTHEON | R82X | 2 |
| Radar Marine SCAN | RAYTHEON | R41X M89959 | 1 |
| Radar Target REF | GRACE | 2B1180A | 1 |
| Radio Marine VHF/FM | ICOM | M100 | 2 |
| Radio Marine VHF/FM | ICOM | M25D | 11 |
| Radio Marine VHF/FM | ICOM | IC-M125 | 11 |
| Radio Set Portable | CCI | AN/URC-54 | 4 |
| Radio Transciever Portable | REPCO | AN/PRC-94(V) | 2 |
| Radio VHF FM Mobile | MIDLAND | 70-1336B | 1 |
| Radio VHF Portable | MOTOROLA | H99SA | 4 |
| Radio Telephone SSB | STEPHENS | SEA 106 | 1 |
| Radio Telephone SSB | STEPHENS | SEA 222 | 19 |
| Receiver Acoustic | AMETEK | MRM503A | 3 |
| Receiver Acoustic Marker | AMETEK | MRM505 | 3 |
| Receiver DATA DGPS | CSI | D300 | 3 |
| Receiver Differential DGPS | MAGNAVOX | MX-50R | 1 |

Table XII-2 (cont.)

Table XII-2 (cont.)

## ELECTRONICS TEST SUPPORT EQUIPMENT

| Equipment | Mfr. | Model No. | Qty. |
|---|---|---|---|
| Receiver Transmitter Portable | GE | HN56SCSCGX | 3 |
| Receiver Transmitter Portable | MOTOROLA | PT400 | 31 |
| Receiver Transmitter Sonar | MILITARY | AN/UQC-1G | 2 |
| Receiver/Controller Datalink | CUBIC | NONE | 1 |
| Receiver/Recorder FAX | ALDEN | 9344A | 2 |
| Recorder Cassette Portable | EMERSON | CRC98D | 1 |
| Recorder Field 2-Channel | ASTROME | DASH II + | 5 |
| Recorder Strip Chart | GULTON | 07221-J | 3 |
| Recorder Tape 1 | NIAGRA | 4-2 | 1 |
| Recorder/Depth & Temp | RUSTRAK | 388 | 1 |
| Reeling Mach Cable Hand | HONEYWELL | RL274/WQM6 | 2 |
| Regulator Volt Sequencer | WESTINGHOUSE | 10001-2866880 | 6 |
| | *- - - - - deleted - - - - -* | | |
| Relocatable VAN-SATS | NUWC | SATS TEST VAN | 1 |
| SAT COMM-M w/Antenna | SAI | 9821 | 1 |
| Scanner 300 Channel Prog. | RADIO SHACK | PRO-2004 | 2 |
| Simulator Sonar Signal | COMMUNI | SM-698/UQ | 1 |
| Simulator Sonobuoy | AUTEC | SRT-22-AT12900 | 4 |
| Simulator Target Radar | RAYTHEON | NONE | 1 |
| Sonar Control | HYDRO-S | C533UQC | 2 |
| Sonar Fish Finder | APELCO | XED 550 | 1 |
| Sonar Sound Set | MILITARY | AN/UQN-1 | 3 |
| Standard Freq Filter ASY | HONEYWELL | 1A4A2 | 1 |
| Station Base | TCI | TW-7500 | 1 |
| Station HF Mobile | TCI | TW-7000 | 2 |
| Station KPG Pinger ASSY | HONEYWELL | 1A4A1 | 1 |
| Synthesizer Frequency | WAVETEK | 171 | 3 |
| System Fathometer | ODOM | DF3200 | 1 |
| System Receiver DGPS CACR | NAVSTAR | A110-001G2 | 25 |
| System Receiver DGPS DMBS | NAVSTAR | A134-001G1 | 2 |
| System Repair P/C Board | PACE IND. | PPS-200C | 1 |
| System Wind/Speed/Direct | YOUNG | 04503N | 7 |
| Telephone Underwater | AMETEK | ATM-504A | 5 |

Table XII-2 (cont.)

Table XII-2 (cont.)

## ELECTRONICS TEST SUPPORT EQUIPMENT

| Equipment | Mfr. | Model No. | Qty. |
|---|---|---|---|
| Terminal CRT | WYSE | WY-50 | 1 |
| Terminal CRT | TELVIDE | 910 | 1 |
| Terminal Node Controller | Kantronics | KPC-3 | 5 |
| Test Set Weather | IFR | RD-300 | 1 |
| Test Set Wind Speed/Direct | FRONTIER | UMQ-5 | 1 |
| Tester Transponder | VEGA | 6127 | 1 |
| Tester XBT | SIPPICAN | A4 | 3 |
| Theodolite | WILD-HE | WILD-T1 | 1 |
| Timer ON/OFF | AUTEC | HHI-23-AR10900 | 1 |
| Towed Pinger Assembly | AUTEC | N/A | 12 |
| Transceiver | COLLINS | AN/ARC-159(V10) | 8 |
| Transceiver | MOTOROLA | MX 350 | 1 |
| Transceiver Acoustic | EG&G | 8011 | 2 |
| Transceiver | Kenwood | TM-241A | 16 |
| Transceiver | Kenwood | TM-261A | 19 |
| Transceiver FM #1 | MOTOROLA | PT300 | 2 |
| Transceicer PX300 FM | MOTOROLA | P1116A | 14 |
| Transceiver Radio Set | HARRIS | AN/URC-94 | 3 |
| Transceiver VHF RADIO | MOTOROLA | H99SA+052H | 8 |
| Transceiver VHF RADIO | ICOM | IC-M2 | 2 |
| Transceiver VHF RADIO | ICOM | IC-M80 | 7 |
| Transducer SATS Channel 2 | HONEYWELL | TR-293 | 1 |
| Transducer SATS Channel 3 | HONEYWELL | TR-294 | 1 |
| Transducer SATS MAXI | HONEYWELL | 37223750 | 1 |
| Transducer SATS WAFER | HONEYWELL | AN/WQM-6 | 1 |
| Transformer Chassis ASSY | HONEYWELL | - | 1 |
| Transformer Chassis ASSY | HONEYWELL | 37223757-001 | 1 |
| Transmitter Shore DataLink | CUBIC | - | 1 |
| Transmitter Synth SNBUOY | CUBIC | DEP10-078-06M1 | 1 |
| Transponder Radar Beacon | VEGA | AN/DPN-78 | 64 |
| Transponder Sonar | DYNA LAB | AN/SQQ-18A | 13 |
| Transponder Sonar | DYNA LAB | AN/SQQ-46A | 5 |
| Transponder Target | NUWC | MK-1 MOD-2 | 8 |
| V-FIN | BRAINCON | 317 | 1 |
| V-FIN (SSV) | ENDECO | NONE | 1 |
| VAND System w/Pump | NAV ORD | LD620161 | 1 |
| Vessel Sonobuoy Simulator | CUBIC | 251031-1 | 1 |

Table XII-2 (cont.)

| | | | |
|---|---|---|---|
| Voltmeter RMS | TEK | DM 502A | 13 |

Table XII-2 (cont.)

ELECTRONIC TEST SUPPORT (ES)/ACOUSTIC TRACKING EQUIPMENT (ATE) OCDs

| NO. | TITLE |
|---|---|
| OCD-(12)-00-XX; | MARINE ELECTRONICS EQUIPMENT READY ROOM |
| OCD-(12)-02-XX; | WEAPONS SYSTEMS ACCURACY TRIAL (WSAT) DECK TRANSIT SYSTEM |
| OCD-(12)-03-XX; | OPERATION OF SONOBUOY TRANSITTER SRT-22-AT 12900 |
| OCD-(12)-05-XX; | MOBILE ACOUSTIC RESPONSE SYSTEM |
| | - - - - - *deleted* - - - - - |
| OCD-(12)-07-XX; | WEAPONS SYSTEM ACCURACY TRIAL (WSAT) TARGET ARRAY DEPLOYMENT |
| OCD-(12)-09-XX; | ES REQUIRED READING LIST |
| OCD-(12)-12-XX; | ADVANCED SHIPBOARD TRACKING ELECTRONICS (ASTEP) CABLE TO 688 CLASS JUNCTION BOX |
| OCD-(12)-13-XX; | ON-RANGE TEST VESSEL INITIAL ARRIVAL CHECKOUT PROCEDURE |
| OCD-(12)-16-XX; | X-BAND TRANSPONDER UTILIZATION |
| OCD-(12)-17-XX; | DEPLOYMENT AND OPERATION OF SONOBUOY SIMULATOR |
| OCD-(12)-19-XX; | SHIPBOARD TRACKING ELECTRONICS PORTABLE (STEP) CERTIFICATION SHORT TURNAROUND |
| OCD-(12)-22-XX; | SETUP AND OPERATION OF PORTABLE ARGOS |
| OCD-(12)-23-XX; | MK-39 EXPENDABLE MOBILE ASW TRAINING TARGET (EMATT) |

Table XII-3

ELECTRONIC TEST SUPPORT (ES)/ACOUSTIC TRACKING EQUIPMENT (ATE) OCDs

| No. | Title |
|---|---|
| OCD-(12)-24-XX; | INSTALLATION AND OPERATION OF SYNCHRONOUS TRACKING INTERFACE |
| OCD-(12)-25-XX; | SONAR TRANSMITTER SYSTEM MK-72 MOD 0 CERTIFICATION |
| OCD-(12)-26-XX; | SONAR ACOUSTIC TARGET SOURCE OPERATION |
| OCD-(12)-27-XX; | ASSEMBLY, MAINTENANCE, AND REPAIR OF WEAPON ACOUSTIC TRACKING TRANSDUCER (WATT) ASSEMBLY |
| OCD-(12)-28-XX; | INSTALLATION AND OPERATION OF WEAPON ACOUSTIC TRACKING TRANSDUCER (WATT) ASSEMBLY |
| OCD-(12)-29-XX; | INSTALLATION AND OPERATION OF DEEP SUBMERGENCE ASSEMBLY |
| OCD-(12)-30-XX; | ASSEMBLY, MAINTENANCE, AND REPAIR OF DEEP SUBMERGENCE ASSEMBLY |
| OCD-(12)-31-XX; | ASSEMBLY AND OPERATION OF PORTABLE UNDERWATER TRACKING TRANSDUCER |
| OCD-(12)-32-XX; | X-BAND TRANSPONDER INSTALLATION - SH3 HELO |
| OCD-(12)-33-XX; | BOUNCE PINGER |
| OCD-(12)-36-XX; | STEP/UQN-1, UQN-1H, UQN-4 TRACKING INTERFACE |
| OCD-(12)-38-XX; | SITE ONE RADAR BEACON DELAY CERTIFICATION |
| | - - - - - *deleted* - - - - - |
| OCD-(12)-40-XX; | SHIPBOARD TRACKING ELECTRONICS/PORTABLE (STEP) CERTIFICATION PROCEDURES |
| OCD-(12)-42-XX; | CERTIFICATION OF ELECTRONIC TEST SUPPORT PERSONNEL |
| OCD-(12)-43-XX; | HYDROSTATIC TEST FACILITY OPERATION |
| OCD-(12)-44-XX; | MANUAL DEPLOYMENT OF SONOBUOYS |

Table XII-3 (cont.)

ELECTRONICS SUPPORT (ES)/ACOUSTIC TRACKING EQUIPMENT (ATE) OCDs

| No. | Title |
|---|---|
| OCD-(12)-45-XX; | AUTEC ACOUSTICAL TRACKING EQUIPMENT FAILURE REPORTING AND ANALYSIS PROGRAM |
| OCD-(12)-46-XX; | OPERATION OF TACTICAL AIR AND NAVIGATION (TACAN) REMOTE CONTROL AT OPERATIONS CONTROL CENTER (OCC) |
| OCD-(12)-47-XX; | MAINTENANCE AND REPAIR OF SYNCHRONOUS TRACKING INTERFACE |
| OCD-(12)-50-XX; | AUTEC MULTIPURPOSE TRACKING PINGER INSTALLATIONS |
| OCD-(12)-51-XX; | ASTEP/BQN-17 TRACKING INTERFACE |
| OCD-(12)-52-XX; | PUTT INSTALLATION USING KEYPORT FLOOD GRATING MOUNT |
| OCD-(12)-53-XX; | ACOUSTIC TRACKING EQUIPMENT INSTALLATION AND OPERATION FOR WSAT |
| OCD-(12)-54-XX; | IDENTIFYING AND SAFEGUARDING ELECTROSTATIC DISCHARGE (ESD) SENSITIVE ITEMS RECEIVED AT AUTEC |
| OCD-(12)-55-XX; | ACOUSTIC TRACKING EQUIPMENT (ATE) SOLDER REPAIR INSPECTION REQUIREMENTS |
| OCD-(12)-56-XX; | ACOUSTICAL TRACKING EQUIPMENT (ATE) MATERIAL REVIEW BOARD |
| | - - - - - *deleted* - - - - - |
| OCD-(12)-58-XX; | F42-C HYDROPHONE CALIBRATION CURVE DEVELOPMENT |
| OCD-(12)-59-XX; | AUDIT AND INSPECTION AREAS CONTAINING AUTEC ACOUSTIC TRACKING EQUIPMENT (ATE) |
| OCD-(12)-60-XX; | RAYTHEON VESSEL TRACKING TRANSDUCER SYSTEM ASSEMBLY AND CERTIFICATION |

Table XII-3 (cont.)

ELECTRONICS SUPPORT (ES)/ACOUSTIC TRACKING EQUIPMENT (ATE) OCDs

| No. | Title |
|---|---|
| OCD-(12)-61-XX; | ACOUSTIC TRACKING EQUIPMENT/QUALITY ASSURANCE (ATE/QA) REQUIRED READING LIST |
| OCD-(12)-62-XX; | ACOUSTIC TRACKING EQUIPMENT/QUALITY ASSURANCE (ATE/QA) PERSONNEL CERTIFICATION |
| OCD-(12)-63-XX; | ACOUSTIC TRACKING EQUIPMENT (ATE) MATERIAL CONDITION MARKING |
| OCD-(12)-64-XX; | DIFFERENTIAL GLOBAL POSITIONING SYSTEM (GPS) TRACKING SYSTEMS |
| OCD-(12)-65-XX; | ACOUSTIC TRACKING EQUIPMENT/QUALITY ASSURANCE (ATE/QA) TEST AND INSPECTION PLANS |
| OCD-(12)-66-XX; | INCOMING INSPECTION OF ACOUSTIC TRACKING EQUIPMENT (ATE) |
| OCD-(12)-67-XX; | INSPECTION OF MODIFICATIONS MADE TO ACOUSTIC TRACKING EQUIPMENT (ATE) |
| OCD-(12)-68-XX; | INSPECTION OF REPAIRS MADE TO ACOUSTIC TRACKING EQUIPMENT (ATE) |
| OCD-(12)-69-XX; | ACOUSTIC TRACKING EQUIPMENT/QUALITY ASSURANCE (ATE/QA) SAMPLING INSPECTIONS |
| OCD-(12)-70-XX; | REMOVAL OF GM TRANSUCERS AND PLUG CLOSURES FROM SHIP'S FOUNDATION |
| OCD-(12)-71-XX; | PARGOS INITIALIZATION, OPERATION, AND TROUBLESHOOTING |
| OCD-(12)-72-XX; | X-BAND TRANSPONDER INSTALLATION LAMPS III |
| | *- - - - - deleted - - - -* |
| OCD-(12)-77-XX; | REPLACEMENT OF MARK 72 TRANSDUCER CABLE |
| OCD-(12)-78-XX; | DEPLOYING SONAR ACOUSTIC TARGET SOURCE (SATS III) TRANSDUCERS, AN/WQM-6 TEST SET |
| OCD-(12)-84-XX; | SCOTCHKOTE AND WRAP FOR UNDERWATER CABLE SPLICE |
| OCD-(12)-85-XX; | MK-72 MOD 0 TRANSDUCER "C" FREQUENCY CABLE REPAIR |

Table XII-3 (cont.)

ELECTRONIC SUPPORT (ES)/ACOUSTIC TRACKING EQUIPMENT (ATE) OCDs

| No. | Title |
|---|---|
| OCD-(12)-87-XX; | SCOTCHKOTE AND WRAP REPAIR OF UNDERWATER OUTBOARD CABLES |
| OCD-(12)-89-XX; | HYDROPHONE CALIBRATION AND CURVE DEVELOPMENT |
| | - - - - - *deleted* - - - - - |
| OCD-(12)-92-XX; | MK-72 ELECTRONICS TERMINAL CRIMPING |
| OCD-(12)-93-XX; | INSTALLATION AND OPERATION OF MK-72 PINGER SEQUENCER |
| OCD-(12)-94-XX; | MK-12 OCEANOGRAPHIC DATA ACQUISITION SYSTEM (EXPENDABLE BATHYTHERMOGRAPH SYSTEM) |
| | - - - - - *deleted* - - - - - |
| OCD-(15.3)-00-XX; | SOLDERING CERTIFICATION PROGRAM |

Table XII-3 (cont.)

# XIII. TECHNICAL SERVICES

## 1. METROLOGY, CALIBRATION, AND WEIGHT TESTING

### A. GENERAL

All of AUTEC's general and special purpose test equipment and standards, as well as mechanical, electrical, hydraulic, and pneumatic controls, gauges, etc., attached to operating equipment, must be periodically calibrated to assure proper function and accurate operation. AUTEC's general purpose Weight Handling Equipment (WHE) and Material Handling Equipment (MHE), as well as Ordnance Handling Equipment (OHE) (cranes, forklifts, slings, pendants, hooks, exercise weapon nose cages, etc.) must be periodically inspected and the proofload capacity recertified. To accomplish these functions, a Standards and Calibration Laboratory and Non-Destructive Inspection (NDI) facility have been established at AUTEC's Site 1 on Andros Island.

### B. DESCRIPTION

The AUTEC Standards and Calibration Laboratory encompasses both an Electronics Standards Laboratory and a Physical/Mechanical Standards Laboratory. The facility is located within the RSS at Site 1 on Andros Island. AUTEC's Standards and Calibration Laboratory is not a Navy-certified facility. As such, and because the laboratory is not operated by Navy personnel, the only means whereby most related procedures and requirements may be updated is through the Government-Industry Data Exchange Program (GIDEP) sponsored by DoD's Joint Logistics Commanders.

All of AUTEC's Test, Measuring, and Diagnostic Equipment (TMDE) as listed on the AUTEC Property Inventory (approximately 2500 items) is assigned to the Standards and Calibration Laboratory for purposes of acceptance, accountability, calibration, and repair. Equipment may then custodied to the various other AUTEC organizations for use, and periodically re-called when calibration certification is required.

The Standards and Calibration Laboratory additionally supports the periodic calibration of pneumatic and hydraulic pressure/vacuum gauges and other control/monitoring devices, including battery chargers, which are integral to operating various devices and systems throughout AUTEC's facilities.

The Standards and Calibration Laboratory maintains a pool of approximately 300 items of test equipment to support the short-term (less than 30 days) needs of other AUTEC organizations and Range Users.

The laboratory standards are certified at periodic intervals by the Precision Measurement Equipment Laboratory (PMEL) located at Patrick Air Force Base, FL. Timing and frequency standards are traceable to the U.S. Naval Observatory as shown in Figure XIII-I. Capabilities of AUTEC's Standards and Calibration Laboratories are presented in Table XIII-1, and a representative list of test equipment is presented in Table XIII-2. Actual inventory is as provided by NUWC.

Equipment and instruments for which AUTEC does not have adequate calibration facilities are returned periodically to the manufacturer, qualified vendor, or other Government activity for certification.

AUTEC's land-based and shipboard WHE/MHE/OHE including cranes, forklifts, weapons carriers, slings, pendants, cargo hooks, exercise weapon nose cages, etc. require periodic load testing and recertification. As required by NAVSEA OP 5, AUTEC's Periodic Weight Test Program for OHE items listed in NAVSEA OP 2173 must meet the certification requirements established in NAVSEA SG420-AP-MMA-010. See also Chapters IX(1), IX(2), XVIII, and XX(3) of this Specification. Inspection and testing facilities are provided to certify these equipments.

A limited NDI capability is maintained to certify, inspect, and/or measure the physical characteristics of certain mechanical components of AUTEC equipment. These NDI capabilities include instrumentation for magnetic particle and eddy current testing, as well as dye penetrant testing for crack detection. Additionally, mechanical load gauges and electronic load cells are available for weight/load testing. A representative list of NDI equipment is presented in Table XIII-3. Actual inventory is as provided by NUWC.

## C. CONTRACTOR RESPONSIBILITIES

1. The Contractor shall support AUTEC's metrology, calibration, and WHE/MHE/OHE inspection and load test/certification programs in accordance with the Workload Factors given in paragraph D, Applicable Documents cited in paragraph F, and other requirements stated below. Special requirements may be tasked by NUWC Work Order or Letter of Direction.

2. The Contractor shall maintain and operate AUTEC's Standards and Calibration Laboratory, and shall ensure that all requirements for periodic certification, per NAVELEXINST 4355.2 (Series), are satisfied.

3. The Contractor shall maintain all of AUTEC's test and calibration equipment and standards, and AUTEC's NDI equipment, in an operational status, and check-out, calibrate (or have calibrated), and operate all such equipment and standards in accordance with the requirements and procedures established by applicable OCDs and/or as delineated in maintenance and operation manuals provided by equipment manufacturers.

4. The Contractor shall abide by the AMS for all existing inspection, test, and calibration equipment and standards. Maintenance of new equipment will be based on manufacturer-recommended procedures and/or new AMS procedures to be developed by the Contractor.

5. The Contractor shall provide personnel qualified to perform WHE/MHE/OHE proofload and other required periodic non-destructive tests, inspections, and certification, test equipment calibrations, requisite repairs to such equipment, and to maintain the laboratory standards.

6. The Contractor shall arrange for manufacturer or other procured support of such equipment on a case-by-case basis considering cost effectiveness, schedule, or other requirements as approved by NUWC.

7. The Contractor shall develop and maintain an inventory of Government-provided consumables, expendables, and repair/spare parts for AUTEC's inspection, test, and calibration equipment and standards, and as may otherwise be needed for daily operations in accordance with the policies provided in Chapter XXI(1) of this Specification.

8. The Contractor shall maintain a central pool of calibrated test equipment for loan to other work areas on a short term basis.

9. The Contractor shall ensure that, to the maximum degree possible, new equipment to be procured is similar to/compatible with other such types of equipment already on hand.

10. The Contractor shall maintain inventory control of all of AUTEC's WHE/MHE/OHE, TMDE, standards, and control/monitoring equipment and devices. The Contractor shall maintain a record of inspection/proofload testing/certification and/or calibration-due dates for all such equipment. The Contractor shall recall and perform/have performed periodic calibration of all TMDE, standards, and control monitoring devices in accordance with the schedules and requirements of NAVSEA OD 45845, NAVAIR 17-35MTL-1 or, if not otherwise specified, in accordance with maintenance and operation manuals provided by equipment manufacturers. The Contractor shall, subject to the approval of the AUTEC Detachment Officer-in-Charge, designate an individual, or individuals, who are qualified to perform duties as AUTEC's WHE Certifying Official for land-based WHE/MHE (per NAVFAC P-307); AUTEC's Crane Officer, Test Directors, and Crane Certifying Officer for shipboard WHE/MHE/OHE (per NSTM Chapter 589); and AUTEC's Load Test Director/NDI for Ordnance Handling Equipment (per NAVSEA SG420-AP-MMA-010). The Contractor shall recall and perform periodic inspection, test, and load-carrying certification of WHE/MHE/OHE equipment in accordance with the requirements of the relevant Applicable Documents cited in paragraph F. Fixed/stationary WHE/MHE/OHE equipment will be inspected/certified in-place. The Contractor shall:

a. Ensure the immediate removal from service or conspicuous identification of any WHE/MHE/OHE, TMDE, standard, or control/monitoring device which:

1. Has not been inspected/certified/calibrated within the established schedule.

2. Has failed in operation.

3. Shows evidence of physical damage.

4. Has been determined to be, or is suspected of being, outside its required performance limits.

b. Monitor for WHE/MHE/OHE/TMDE which have been reported as missing or lost, and thus removed from the recalibration system, to minimize the possibility of inadvertent use of delinquent or out-of-calibration TMDE or out-of-certification WHE/MHE/OHE.

c. Issue notice of WHE/MHE/OHE, TMDE, standards, and control/monitoring devices which are delinquent for certification or calibration, and ensure that such work is accomplished within one week.

d. Ensure that AUTEC continues to satisfy the Periodic Weight Test Certification Program requirements, established in NAVSEA SG420-AP-MMA-010, for Ordnance Handling Equipment Test Facilities.

e. Maintain records of all inspections, tests, load carrying certifications, calibrations, etc., performed for each individual piece of equipment. Records shall be maintained/retained in accordance with requirements contained in the Applicable Documents cited in paragraph F.

11. All equipment which must be shipped shall be properly packaged and marked for shipping to guard against loss. A DD Form 1149, Shipping Document, shall be properly prepared for each such shipment to provide traceability.

12. The Contractor shall record and report repairs, and shall maintain and submit inventory/calibration/load test certification summaries in accordance with applicable OCDs.

13. The Contractor shall ensure that AUTEC's laboratory standards remain certified by appropriate authority.

14. The Contractor shall provide technical support to Purchasing for procurement of Calibration and Standards Laboratory and for NDI equipment including: specification writing; technical evaluation of proposals; cost review; quality review; technical qualification of sources; preparation of inspection and acceptance procedures; and conduct of acceptance tests.

15. The Contractor shall provide a Metrology Lead Technician. This individual, assisted by others, shall be qualified to perform and/or oversee the following tasks:

a. Equipment inventory.
b. Equipment alignment/calibration/maintenance.

c. WHE/MHE/OHE test, inspection, and certification.

d. Equipment modifications.
e. Preparation and review of technical documentation.
f. Provide NUWC Work Order support.
g. Provide technical interface with NUWC/other activities.

16. The Contractor shall maintain a file of equipment catalogs, relevant technical documents, etc., for all of AUTEC's TMDE, NDI, and Standards/Calibration Equipment.

17. The Contractor shall provide a training and qualification program, for personnel assigned to perform calibration and repairs to electronic, mechanical, hydraulic, and pneumatic equipment as required by NAVELEXINST 4355.2 (Series). The Contractor shall additionally provide a training and certification program for personnel assigned to perform soldering on TMDE and Standards/Calibration Equipment, in accordance with the provisions of OCD-(15.3)-00-XX. The Contractor shall maintain records of such training, qualification, and certification received by each individual, and shall not permit personnel who have not been so certified to conduct operations without supervision.

18. The Contractor shall provide a training, testing, and certification program for personnel assigned responsibility for non-destructive inspection (NDI) and proofload testing of WHE/MHE/OHE equipment in accordance with the requirements of OCD-(13.1)-02-XX, as well as NAVFAC P-307 (for land-based equipment), NSTM Chapter 589 (for shipboard equipment), and NAVSEA SG420-AP-MMA-010 (for all ordnance handling equipment) as appropriate. The Contractor shall maintain records of all such training, qualification, and certification received by each individual, and shall not permit personnel who have not been so certified to conduct operations without supervision.

19. The Contractor shall be a participant in the Government-Industry Data Exchange Program (GIDEP) in accordance with the procedures and guidance contained in NAVSEA SO300-BT-PRO-010 and NAVSEA SO300-BU-GYD-010.

20. The Contractor shall submit all NUWC-required technical and administrative reports, described in Chapter XXV of this Specification, as pertain to test equipment calibration and repair/WHE, MHE, and OHE inspections and certifications.

## D. WORKLOAD FACTORS

1. Workload for calibration and standards testing is estimated as follows:

JA1-305
N61339-97-C-0001
P00053

| TYPE | Qty | SERVICE | FREQUENCY |
|---|---|---|---|
| Test Equipment* | 2500 | Inventory; control | 160 repairs/yr |
| Electronic Equipment | 1750 | Calibration | 1100/yr |
| Mechanical Equipment | 800 | Calibration | 750/yr |
| Electronic Cal Standards | 227 | Inventory; control | 40 recerts/yr |
| Mechanical Cal Standards | 46 | Inventory; control | 30 recerts/yr |

*Test equipment includes both electronic and mechanical equipment.

2. Annual workload for WHE/MHE/OHE inspections, tests, load certifications is estimated as follows:

| Non-Destructive Inspections | Individual Tests | WHE/MHE/OHE Certifications |
|---|---|---|
| 160 | 2,000 | 200 |

## E. KEY PERSONNEL/PERSONNEL QUALIFICATIONS

1. Key Personnel: None.

2. Personnel Qualifications:

a. Metrology Lead Technician To successfully execute the tasks and responsibilities described, the person assigned should as a minimum:

1. Be a graduate of a formal two year course of study in electronics, or have equivalent military training.

2. Have five years experience and increasing responsibility, either in the operation of test equipment for maintenance and repair of electrical/mechanical systems in the field, or in the operation of such equipment in a standards laboratory environment for calibration and repair of instrumentation.

3. Have excellent knowledge of electronic theory, and the use/applicability of mechanical and electronic test equipment, including: oscilloscopes, digital counters, meters, X-Band RF equipment, etc.

4. Have one year of supervisory experience.

## F. APPLICABLE DOCUMENTS:

| | |
|---|---|
| SECNAVINST 5200.39 (Series); | Participation in the Government-Industry Data Exchange Program (GIDEP) |
| NAVELEXINST 4355.2 (Series); | Department of the Navy Metrology and Calibration (METCAL) Program |
| NAVSEA OD 45854/ NAVAIR 17-35 MTL-1; | Metrology Requirements List (METRL) |
| NAVSEA OP-4; | Weapons Handling Afloat |
| NAVSEA OP-5; | Ammunition and Explosives Ashore Safety Regulations for Handling, Storing, Production, Renovation, and Shipping |
| NAVSEA SG420-AP-MMA-010; | Periodic Testing Arrangements for Ordnance Handling Equipment |
| NAVSEA SO300-BT-PRO-010; | GIDEP Operations Manual |
| NAVSEA SO300-BU-GYD-010; | GIDEP Requirements Guide |
| NAVFAC (Publication) P-307; | Management of Weight Handling Equipment |
| NAVAIR 17-1-114; | Inspection and Proofload Testing of Lifting Slings |
| NAVAIR 17-1-127; | Periodic Proofload Testing of Weapons Support Equipment |
| Naval Ships Technical Manual (NSTM) Chapter 589; | Cranes |
| Naval Ships Technical Manual (NSTM) Chapter 613; | Wire, Fibre Rope, and Rigging |
| OCD-(15.3)-00-XX; | Soldering Certification Program |
| OCD-(13.1)-01-XX; | Management of Shore Based Weight Handling Equipment |
| OCD-(13.1)-02-XX; | AUTEC Nondestructive Inspection Program |

*- - - - deleted - - - - -*

JA1-306
N61339-97-C-0001
P00087

| | |
|---|---|
| OCD-(13.1)-09-XX; | Standards and Calibration Laboratory Operations |

- - - - - *deleted* - - - - -

| | |
|---|---|
| OCD-(13.1)-33-XX; | Underwater Telephone via VHF/FM Radio |
| Other OCDs; | Relevant/Related OCDs as may be listed in Table XV-4 |
| App 9-6G | Request for Test Equipment |

AUTEC Hazardous Waste Management Plan (latest version)

Figure XIII-1
AUTEC Primary Frequency Reference and Measurement Standards
Traceability to U.S. Naval Observatory

Figure XIII-1
AUTEC Primary Frequency Reference and Measurement Standards
Traceability to U.S. Naval Observatory

# CAPABILITIES OF THE AUTEC STANDARDS LABORATORY

| PARAMETER | CALIBRATION RANGE | ACCURACY |
|---|---|---|
| **ELECTRICAL MEASUREMENTS** | | |
| AC Voltage | To 2.2 microvolts | |
| | 10-20 Hz | ±600 ppm +5µV |
| | 20-40 Hz | ±240 ppm +5µV |
| | 40-20 kHz | ±120 ppm +5µV |
| | 20 k-50 kHz | ±410 ppm +5µV |
| | 50 k-100 kHz | ±950 ppm +8µV |
| | 100 k-300 kHz | ±.13% +15µV |
| | 300 k-500 kHz | ±.18% +30µV |
| | 500 k-1 mHz | ±.36% +30µV |
| | To 22 microvolts | |
| | 10-20 Hz | ±600 ppm +6µV |
| | 20-40 Hz | ±240 ppm +6µV |
| | 40-20 kHz | ±120 ppm +6µV |
| | 20 k-50 kHz | ±410 ppm +6µV |
| | 50 k-100 kHz | ±950 ppm +8µV |
| | 100 k-300 kHz | ±.13% +15µV |
| | 300 k-500 kHz | ±.18% +30µV |
| | 500 k-1 mHz | ±.36% +30µV |
| | To 220 microvolts | |
| | 10-20 Hz | ±600 ppm +16µV |
| | 20-40 Hz | ±240 ppm +10µV |
| | 40-20 kHz | ±110 ppm +10µV |
| | 20 k-50 kHz | ±360 ppm +10µV |
| | 50 k-100 kHz | ±900 ppm +20µV |
| | 100 k-300 kHz | ±.11% +30µV |
| | 300 k-500 kHz | ±.18% +40µV |
| | 500 k-1 mHz | ±.36% +100µV |

Table XIII-1

CAPABILITIES OF THE AUTEC STANDARDS LABORATORY

| PARAMETER | CALIBRATION RANGE | ACCURACY |
|---|---|---|
| AC Voltage (cont.) | To 2.2 Volts | |
| | 10-20 Hz | ±600 ppm +100µV |
| | 20-40 Hz | ±180 ppm +30µV |
| | 40-20 kHz | ±85 ppm +7µV |
| | 20 k-50 kHz | ±140 ppm +20µV |
| | 50 k-100 kHz | ±280 ppm +80µV |
| | 100 k-300 kHz | ±480 ppm +150µV |
| | 300 k-500 kHz | ±.12% +400µV |
| | 500 k-1 mHz | ±.24% +1mV |
| | To 22 Volts | |
| | 10-20 Hz | ±600 ppm +1mV |
| | 20-40 Hz | ±180 ppm +300µV |
| | 40-20 kHz | ±85 ppm +70µV |
| | 20 k-50 kHz | ±140 ppm +200µV |
| | 50 k-100 kHz | ±280 ppm +400µV |
| | 100 k-300 kHz | ±600 ppm +1.7mV |
| | 300 k-500 kHz | ±.14% +5mV |
| | 500 k-1 mHz | ±.30% +9mV |
| | To 220 Volts | |
| | 10-20 Hz | ±600 ppm +10µV |
| | 20-40 Hz | ±180 ppm +3µV |
| | 40-20 kHz | ±90 ppm +1µV |
| | 20 k-50 kHz | ±250 ppm +4µV |
| | 50 k-100 kHz | ±600 ppm +10µV |
| | 100 k-300 kHz | ±.16% +110µV |
| | 300 k-500 kHz | ±.54% +110µV |
| | 500 k-1 mHz | ±1.30% +220µV |
| | To 1100 Volts | |
| | 50-1kHz | ±90 ppm +4µV |
| DC Voltage | 0-11 V | ±3.5 ppm +5µV |
| | 12-22 V | ±3.5 ppm +8µV |
| | 22-275 V | ±6.0 ppm +100µV |
| | 275-1100 V | ±6.0 ppm +400µV |

Table XIII-1 (cont.)

---

Table XIII-1 (cont.)

# CAPABILITIES OF THE AUTEC STANDARDS LABORATORY

| PARAMETER | CALIBRATION RANGE | ACCURACY |
|---|---|---|
| AC Current | 9 uA to 220 mA | |
| | 10 Hz to 20 Hz | ±800 ppm + 30 nA |
| | 20 Hz to 40 Hz | ±420 ppm + 25 nA |
| | 40 Hz to 1 kHz | ±160 ppm + 20 nA |
| | 1 kHz to 5 kHz | ±700 ppm + 50 nA |
| | 5 kHz to 10 kHz | ±1800 ppm + 100 nA |
| | 220 uA to 2.2 mA | |
| | 10 Hz to 20 Hz | ±800 ppm + 50 nA |
| | 20 Hz to 40 Hz | ±420 ppm + 40 nA |
| | 40 Hz to 1 kHz | ±160 ppm + 40 nA |
| | 1 kHz to 5 kHz | ±700 ppm + 500 nA |
| | 5 kHz to 10 kHz | ±1800 ppm + 10 uA |
| | 2.2 mA to 22 mA | |
| | 10 Hz to 20 Hz | ±800 ppm + 500 uA |
| | 20 Hz to 40 Hz | ±420 ppm + 400 uA |
| | 40 Hz to 1 kHz | ±160 ppm + 400 uA |
| | 1 kHz to 5 kHz | ±700 ppm + 5 uA |
| | 5 kHz to 10 kHz | ±1800 ppm + 10 uA |
| | 22 mA to 220 mA | |
| | 10 Hz to 20 Hz | ±800 ppm + 5 uA |
| | 20 Hz to 40 Hz | ±420 ppm + 4 uA |
| | 40 Hz to 1 kHz | ±180 ppm + 4 uA |
| | 1 kHz to 5 kHz | ±700 ppm + 50 uA |
| | 5 kHz to 10 kHz | ±1% + 200 uA |
| | 220 mA to 2.2 A | |
| | 40 Hz to 1 kHz | ±750 ppm + 40 uA |
| | 1 kHz to 5 kHz | ±850 ppm + 100uA |
| | 5 kHz to 10kHz | ±1% + 200 uA |
| | 2.2 A to 19.9999 A | ±.07% + 1 mA |
| | 50 Hz to 1 kHz | ±.07% + 1 mA x f* |
| | 1 kHz to 5 kHz | (where f = frequency in kHz) |

Table XIII-1

---

Table XIII-1

## CAPABILITIES OF THE AUTEC STANDARDS LABORATORY

| PARAMETER | CALIBRATION RANGE | ACCURACY |
|---|---|---|
| DC Current | 0 to 2.2 mA | ±60 ppm + 10 nA |
| | 2.2 mA to 22 mA | ±60 ppm + 100 nA |
| | 22 mA to 2.20 mA | ±70 ppm + 1 nA |
| | 220 mA to 2.2 A | ±95 ppm + 30 nA |
| | 2.2 A to 19.9999 A | ±250 ppm +1 mA |
| Resistance | .01 ohm to 11 M ohm | ±.005% + .01 ohms |
| | 10 M ohm to 100 M ohm | ±.01% |
| | 100 M ohm to 1 G ohm | ±.14% |
| Inductance | 0.1 nanohenry to .01 microhenry | ±1.0% |
| | 0.1 microhenry to 1111 Henry | ±0.1% |
| Capacitance | 0.1 to 1.1 millifarad | ±0.1% +1 pF |
| Frequency | 1 Hz to 18 GHz | ±5 parts in $10^{10}$ |

Table XIII-1

# CAPABILITIES OF THE AUTEC STANDARDS LABORATORY

| PARAMETER | CALIBRATION RANGE | ACCURACY |
|---|---|---|
| PHYSICAL MEASUREMENTS | | |
| Hydraulic Pressure | To 10,000 psi | ±0.1% |
| Pneumatic Pressure | To 10,000 psi | ±0.025% |
| | 0 to 2,000 psi | ±0.01% |
| Vacuum | To 30 inches of mercury | ±0.01 in. |
| Torque | To 1000 foot-pounds | ±1.0% |
| Force | To 5000 pounds | ±0.025% |
| Dimension | To 24 inches | ±0.0001 in. |
| Temperature | -30°C to +400°C | ±0.05°C |

Table XIII-1 (cont.)

CALIBRATION LABORATORY TEST EQUIPMENT

| Equipment | Model No. | Qty |
|---|---|---|
| 1000 TO 1 DIVIDER | 067-0529-00 | 1 |
| AC RATIO TRANSFORMER | (Various) | 2 |
| AM/FM TEST SOURCE | 11715A | 1 |
| ANALOG BENCH SCALE, 200 LB | BP13-200S | 1 |
| ATTENUATOR SET | (Various) | 2 |
| AUDIO ANALYZER | 8903A | 1 |
| BANDPASS FILTER, 170 MHZ | 125B8NM170/4.5 | 1 |
| CAL TEST ADAPTER MK 519 | 2837984 | 2 |
| CALIBRATION FIXTURE | 067-0587-01 | 1 |
| CALIBRATION GENERATOR | PG506 | 2 |
| CALIBRATION RESISTANCE STD | 71-634 | 1 |
| CALIBRATOR | 5700AOPT03 | 1 |
| COAXIAL STEP ATTENUATOR | (Various) | 2 |
| COMPOUND GAUGE 30HG - 30PSI | PGT-60L-30V30 | 1 |
| CONNECTOR GAGE | 31A | 1 |
| CRYSTAL DETECTOR W/VIDEO LOAD | 423B OPT002 003 | 1 |
| CURRENT SHUNT | 4360/4361 | 2 |
| DC MILLIAMMETER | 428B | 1 |
| DC POWER SUPPLY | E3615A | 1 |
| DC VOLTAGE CALIBRATOR | 5440B | 1 |
| DC VOLTAGE STANDARD | AN3100 | 1 |
| DECADE CAPACITOR STANDARD | 1423-A | 1 |
| DECADE RESISTOR | (Various) | 3 |
| DETECTOR | 1238 | 1 |
| DIAL INDICATOR STAND | 7004 | 1 |
| DIGITAL MULTIMETER | (Various) | 5 |
| DIGITAL OSCILLOSCOPE | TDS220/TDS2CM | 3 |
| DIGITAL PRESS. INDICATOR | (Various) | 4 |
| DIGITAL TEMPERATURE INDICATOR | 4202B-13-15 | 1 |
| DIRECTIONAL COUPLER 2-18 GHZ | 772D | 1 |
| DUAL HI-LO FILTER | 852-01 | 1 |
| DUAL TRACE PREAMPLIFIER | (Various) | 3 |
| DYNAMIC SIGNAL ANALYZER | 3561A | 1 |
| DYNAMOMETER W/REMOTE | ED-2000/5K | 1 |
| ELECTRONIC GAGE INDICATOR | 519-805 | 1 |

Table XIII-2

| | | |
|---|---|---|
| FREQUENCY COUNTER | 5328A | 1 |

Table XIII-2

CALIBRATION LABORATORY TEST EQUIPMENT

| Equipment | Model No. | Qty |
|---|---|---|
| GAGE BLOCK GRADE 2 | UAL4 | 2 |
| GAGE BLOCK SET | (Various) | 2 |
| GAUGE VACUUM 0-30 IN HG CM - | | 1 |
| HIGH VOLTAGE PROBE | 80K-40 | 1 |
| HYGROTHERMOGRAPH | 5-594 | 2 |
| LEVELED SINE WAVE GENERATOR | SG503 | 2 |
| MEASURING RECEIVER | 8902A | 1 |
| MEGOHM RESISTANCE BOX | - | 1 |
| MICROWAVE CONVERTER | 11793A | 1 |
| MICROWAVE COUNTER FREQUENCY | (Various) | 2 |
| MODULATION ANALYZER | 8901A | 1 |
| MODULATION SECTION | 86635A | 1 |
| OPTICAL FLAT SET 1 IN | - | 1 |
| OSCILLATOR | (Various) | 2 |
| OSCILLOSCOPE | (Various) | 3 |
| PEAK TO PEAK DETECTOR | 067-0625-00 | 1 |
| PLATINUM RESISTANCE THERMOMETE | 162CE | 1 |
| PNEUMATIC COMPARATOR | 3461-48-105 | 1 |
| POWER METER | (Various) | 5 |
| POWER METER CALIBRATOR | 8477A | 1 |
| POWER SENSOR | (Various) | 6 |
| POWER SPLITTER | 1870A | 1 |
| PRECISION AMPLIFIER | 5215A | 2 |
| PRECISION CAPACITANCE BRIDGE | 1616 | 1 |
| PRESSURE GAUGE | (Various) | 12 |
| PROGRAMMABLE AC CALIBRATOR | 5200A | 2 |
| PROVING RING 5000 LB | S200 | 1 |
| PSYCHROMETER | 566 | 1 |
| RANGE CALIBRATOR | 11683A | 1 |
| RC BOX | 16340A | 1 |
| RF SECTION | 86603A | 1 |
| RF WATTMETER STANDARD | 4340 | 1 |
| RISER BLOCK | 515-117 | 1 |

Table XIII-2 (cont.)

CALIBRATION LABORATORY TEST EQUIPMENT

| Equipment | Model No. | Qty |
|---|---|---|
| SENSOR MODULE | 11722A | 1 |
| SENSOR MODULE | 11792A | 1 |
| SPECTRUM ANALYZER | 3588A | 1 |
| STANDARD INDUCTOR | (Various) | 10 |
| STANDARD MEASURING ROD SET | 234A1 TO 234A19 | 1 |
| STANDARD RESISTOR | (Various) | 10 |
| STEP ATTENUATOR | 355 | 3 |
| SURFACE PLATE GRADE AA 18X24 | 80628 | 1 |
| SWEPT SIGNAL GENERATOR | 83630B | 1 |
| SWR BRIDGE SET | SC3470B | 1 |
| SWR METER | 415D | 1 |
| SYNTHESIZED SIGNAL GENERATOR | (Various) | 2 |
| SYNTHESIZED SWEEP GENERATOR | 83752B | 1 |
| SYNTHESIZER/FUNCTION GENERATOR | 3325 | 3 |
| SYNTHESIZER/LEVEL GENERATOR | 3335A | 1 |
| TEST OSCILLATOR | 652A | 1 |
| THERMAL CONVERTER | (Various) | 6 |
| TIME BASE UNIT | 7B92A | 2 |
| TIME MARK GENERATOR | TG501 | 2 |
| TORQUE ANALYZER | EMH-150 | 1 |
| TORQUE CALIBRATOR | (Various) | 2 |
| TORQUE TESTER | 1000 PF | 1 |
| TRANSCONDUCTANCE AMPLIFIER | 5220A | 1 |
| TRUE RMS VOLTMETER | (Various) | 3 |
| UNIVERSAL FREQUENCY COUNTER | 53131A | 1 |
| GPS TIME AND FREQUENCY RECEIVER | ET6000-OCXO | 1 |

Table XIII-2 (cont.)

- - - - - *deleted* - - - - -

Table XIII-2 (cont.)

- - - - - *deleted* - - - - -

Table XIII-2 (cont.)

NON-DESTRUCTIVE TEST EQUIPMENT

| Equipment | Mfg | Model No. | Qty |
|---|---|---|---|
| Dynomometers | Dillon | (Various) | 5 |
| Digital Radiometers | Spectron | (Various) | 2 |
| Wire Rope Inspection Kit | AUTEC | - | 1 |
| Eddy Current Tester | (Various) | (Various) | 3 |
| Stationary Blast Cabinets | Dayton | 37850 | 2 |
| Electric Parts Washer | Graymill | PL422A | 1 |
| Hydraulic Cable Cutter | Pell | - | 1 |
| DC Amp Meter | Magnaflux | X-1468 | 1 |
| Relocatable Laboratory | Alnakok | NDI Lab | 1 |
| Penetrant Test Kit | Magnaflux | PTK-1 | 1 |
| Ultrasonic Thickness Gauge | (Various) | (Various) | 2 |
| Ultrasonic Cleaner | Blkston | (Various) | 2 |
| Crack Check Kit | Test Systems | CC-8008 | 1 |
| Portable Contour Probe | Parker | DA-200 | 1 |
| Stereo Zoom Microscope | - | - | 1 |
| Kit Penetrant Flaw Detector | Illinois | ZB100 | 1 |
| Microscope Zoom Stereo | Meiji | EMZ | 1 |
| Scale Digital Portable | Sunbeam | 700z-2000y | 1 |
| Hand and Power Tools | (Various) | (Various) | - |

Table XIII-3

# XIII. TECHNICAL SERVICES (CONT.)

## 2. MACHINE SHOP AND WELDING SERVICES

### A. GENERAL

The remote nature of Andros Island and the tempo of operations which must be supported dictate that AUTEC must be as self-sufficient as possible. This requirement extends to the need for local machine shop and welding facilities to repair, fabricate, and maintain Andros-based or test-related mechanical equipment and structural components.

### B. DESCRIPTION

General machine shop and welding services are required to fabricate unique new or replacement components for AUTEC equipment and instrumentation systems, for which there are no commercially available equivalents, as well as to fabricate special Range User test fixtures. Other tasks include duplicating or repairing broken components of equipment for which parts are no longer commercially available, or which are long lead-time items needed immediately.

Machine shop services extend to the planned or emergency overhaul/rebuilding of mechanical equipment such as clutches, transmissions, etc., of AUTEC's vessels, motor pool vehicles, construction equipment, power plant, etc.

Welding services are also required in support of minor construction projects at the various Andros Island sites and off-shore structures, to repair or modify AUTEC's vessels or other assets, and to install/remove components, instrumentation, test fixtures, etc., aboard AUTEC and Range User vessels.

The machine and welding shops are co-located in a building adjacent to the pier area at Site 1. Machine shop equipment is provided for bending, cutting, turning, milling, grinding, broaching, and shearing metal stock. Materials which are generally worked include iron, steel, stainless steel, copper/copper alloys, aluminum, and plastics such as Delrin. Welding equipment is provided for flame cutting, flame and arc welding, TIG and MIG welding, brazing, and soldering.

A representative list of equipment is presented in Table XIII-4. Actual inventory is as provided by NUWC.

## C. CONTRACTOR RESPONSIBILITIES

1. The Contractor shall support AUTEC's machine shop and welding services requirements in accordance with the AUTEC Schedule of Operations, published Operations Directives, Workload Factors given in paragraph D, Applicable Documents cited in paragraph F, and other requirements stated below. Special requirements may be tasked by NUWC Work Order or Letter of Direction.

2. The Contractor shall maintain AUTEC's machine shop and welding equipment in an operational status as needed to perform the tasks described. Generally, equipment operators shall be capable of performing preventative maintenance.

3. The Contractor shall maintain, check-out, calibrate, and operate all of AUTEC's machine shop and welding equipment in accordance with the standards and procedures established by applicable OCDs and/or as delineated in maintenance and operation manuals provided by equipment manufacturers. Requirements set forth in DFARS 245 for Industrial Plant Equipment (IPE) shall also apply.

4. The Contractor shall provide machine shop and welding support for Range User tests and special projects as requested by NUWC.

5. The Contractor shall operate AUTEC's machine shop in accordance with best commercial practices. Equipment overhauls shall also be to best commercial practice and shall be to manufacturers' specifications unless otherwise directed by NUWC. Welding shall be in accordance with ASA, AWS, or ASTM commercial standards as applicable.

6. The Contractor shall be responsible for delivery of finished products to designated recipients in a timely manner (or as scheduled by applicable Operations Directive or Work Order).

7. The Contractor shall provide personnel qualified to perform the tasks described and to produce finished products of professional quality.

8. The general approach to accomplishing AUTEC's needs for machine shop and welding services, as well as for the corrective maintenance of AUTEC's machine shop and welding equipment,

is that such tasks shall be performed by the Contractor. Arrangements for manufacturer or other procured services to support occasional, extraordinary, or specialty requirements related to this work area shall be made by the Contractor on a case-by-case basis considering cost effectiveness, schedule, or other requirement as approved by NUWC.

9. The Contractor shall develop and maintain an inventory of Government-provided materials, consumables, expendables, and repair/spare parts as may be necessary to support AUTEC's machine shop and welding needs in accordance with the policies provided in Chapter XXI(1) of this Specification.

10. The Contractor shall submit all NUWC-required technical and administrative reports, described in Chapter XXV of this Specification, as pertain to support of AUTEC'S machine shop, engine overhaul, and welding functions.

## D. WORKLOAD FACTORS

1. Machine shop and welding services will be provided during normal workhours on Andros Island. Extended hours are sometimes necessary, and emergency support must be available at all times.

2. Average workload for machine shop services is estimated at 70 requests per month, nominally requiring less than one day to complete.

3. Average workload for welding services is estimated at 40 requests per month, nominally requiring two days to complete.

4. Emergency (e.g., breakdown) repairs, fabrication, etc. are an as-occurring workload.

## E. KEY PERSONNEL/PERSONNEL QUALIFICATIONS

None.

## F. APPLICABLE DOCUMENTS

| | |
|---|---|
| DoD FAR Supplement (DFARS) Part 245; | Government Property (Industrial Plant Equipment (IPE)) |
| OCD-(22.1)-20-XX; | Marine Cutting and Welding Safety Procedures |
| Other OCDs; | Relevant/Related OCDs as may be listed in Table XV-4 |
| APP 11-3G; | Fire Protection Policy |
| ASA, AWS, ASTM; | Standard Specifications for Welding |

AUTEC
MACHINE SHOP/WELDING EQUIPMENT

| Equipment | Mfr | Model No. | Qty |
|---|---|---|---|
| Plate Surface | Baldridg | - | 1 |
| Sander Belt | DOALL | 4206 | 1 |
| Machine Winding | DI-ACRO | - | 1 |
| Grinder | Gorton | 375-4 | 1 |
| Machine Forming | Niagara | 349 | 1 |
| Lathe Toolmaker | Sprgfild | S | 1 |
| Grinder Pedestal | Prat Wht | ND12 | 1 |
| Machine Grinding | Excello | 44A | 1 |
| Machine Milling | Cincinna | 3DTHS | 1 |
| Bandsaw | Doall Co | MP20 | 1 |
| Machine Drilling | Hamilton | VARI | 1 |
| Drill Radial | Cincinna | 1R | 1 |
| Machine Engrave | Gorton | 3U | 1 |
| Machine Drilling | G M Ind | 1-2MA8 | 1 |
| Press Hydraulic | Dake | 75H | 1 |
| Grinding Machine Utility | Stanley | 610G | 1 |
| Machine Shear | Cincinna | 1406 | 1 |
| Machine Punching | Rotex | 18A-52 | 1 |
| Lathe Engine | Boye | E | 1 |
| Machine Forming Bench TP | O'Neil | N02 0 1201 | 1 |
| Micrometer Set | Brn & Shar | 6224U | 1 |
| Micrometer Set IS | Giddings | - | 1 |
| Micrometer Set IS | PRH | - | 1 |
| Brake Bending | Kreis | L31 | 1 |
| Saw Sabre Portable | Milwaukee | 6510 | 1 |
| Notcher Tab | DI-Acro | 2 | 1 |
| Grinder Lathe | US Elec | A | 1 |
| Drill Motor 3/8" | Rockwell | 756 | 1 |
| Saw Hack Power Hydraulic | Keller | 5HYDUTY | 1 |
| Press Arbor Hand Oper | FAMCO | 6C | 1 |
| Square Precision 18" | Brn & Sharp | 540 | 1 |
| Gauge Set Surface | Baird | - | 1 |

Table XIII-4

AUTEC
MACHINE SHOP/WELDING EQUIPMENT

| Equipment | Mfr | Model No. | Qty |
|---|---|---|---|
| Drill Motor 1/2" | Thor | 825G | 1 |
| Gauge Bore | Starrett | 84-111-7 | 1 |
| Gauge Bore | Starrett | 241 | 1 |
| Gauge Bore | Starrett | DR558526-B-3 | 1 |
| Caliper Vernier 39" | Etalon | - | 1 |
| Caliper Vernier 24" | BRS | - | 2 |
| Pyrometer Surface Pyrometr | S-5060 | 1 | |
| Grinder Inch | US Elec | HA6 | 1 |
| Drill Motor 3/8" VSP/REV | Ing-Rand | SP6039 | 1 |
| Machine Milling | Bridgept | 12BR2J-48 | 1 |
| Saw Jig 2 Speed | Blk & Deck | 7514-99 | 1 |
| Grinder Elec Hand Held | Ing-Rand | B CAT NO 8064 | 1 |
| Saw Cutoff Machine | AEG | 2300S | 1 |
| Sander/Grinder 4" Makita | 9501B | 1 | |
| Drill Motor 3/8" VSP/REV | Blk & Deck | 1172-90 | 1 |
| Nibbler #8 HD | Blk & Deck | 691 | 1 |
| Tester Deflection | Riken | NO. 2 | 1 |
| Lathe Tool Precision | Hardinge | HLV-H | 1 |
| Saw Circular 10 1/4" | Skil | 860 | 1 |
| Tap & Die Set | Greenfld | SET NO 4 | 1 |
| Saw Jig 2 Speed | Blk & Deck | 7514-99 TYPE 5 | 1 |
| Drill Motor 3/8" VSP/REV | Blk & Deck | 1180-90/100 | 1 |
| Sander Disc Pneumatic | AIR Inc | 716 TYPE B | 1 |
| Drill Motor 1/2" | Skil | 6746 | 1 |
| Drill Motor 3/8" | Blk & Deck | 1190 TYPE 100 | 1 |
| Drill Press Electomagnetic | Milwaukee | 4202 | 1 |
| Rotary Tool-Grinder Hand | Dremel | 395 TYPE 3 | 1 |
| Sander/Grinder 4" | Makita | 9501B | 1 |
| Kit Broach/Bushing | Dumont | 10-10A | 1 |
| Arc Welder Machines | - | - | 5 |
| MIG Welder Base Units | - | - | 2 |
| With One Wire Feed | - | - | |

Table XIII-4 (cont.)

AUTEC
MACHINE SHOP/WELDING EQUIPMENT

| Equipment | Mfr | Model No. | Qty |
|---|---|---|---|
| TIG Welding Machines | - | - | 2 |
| One-Ton Hydraulic Bench Press | - | - | 1 |
| Four-Ton Hydraulic Bench Press | - | - | 1 |
| Oxyacetylene Cutting Rigs | - | - | 3 |
| Electric Cut-Off Saw | - | - | 1 |
| Machine Cutting Torch | - | - | 1 |
| Grinder Pedestal | Baldor | 8107W | 1 |
| Belt Sander | Doall Co. | 4206 | 1 |
| Plasma ARC Cutter | Miller | Spectrum 1500 | 1 |
| Saw Reciprocating | Keller | - | 1 |
| Drill Press | Wilton | 5816 | 1 |
| Band Saw | Manhattan | 951466 | 1 |
| Lathe | Jet | 1340R | 1 |
| Horizontal Band Saw | Jet | HBS-9M | 1 |
| Miscellaneous Hand Tools, Test Meters, Shop, and Office Equipment | (Various) | - | - |

| Portable Welders | USN# | Yr Mfg'd | Qty. |
|---|---|---|---|
| Welder ARC/Trailer | 51-23111 | 90 | 1 |
| Welder ARC/Trailer | 51-77558 | 89 | 1 |
| Welder ARC AC/DC (TIG) | 51-77559 | 89 | 1 |
| Welder ARC AC/DC (TIG) | 51-23779 | 92 | 1 |

Table XIII-4 (cont.)

# XIII. TECHNICAL SERVICES (CONT.)

## 3. DIVING

### A. GENERAL

Diving/underwater work at Andros Island is a vital part of daily operations and is necessary for: hull/machinery inspections, maintenance, and repair; installation and removal of range tracking devices and other hull-mounted test fixtures and instrumentation; inspection, maintenance, and repair of in-water facilities; and, the recovery of exercise weapons, targets, and other unmanned RDT&E vehicles.

### B. DESCRIPTION

Diving at AUTEC is limited to "no decompression" operations utilizing open circuit SCUBA apparatus and techniques. All diving is strictly limited to 100 feet, salt water (fsw) or less, and to daylight hours. All diving will be conducted in accordance with OSHA Standards (29 CFR Part 1910.401, Subpart T).

The Government provides a diving locker, within the RSS at Site 1 on Andros Island, for the storage and maintenance of diving equipment, as well as ancillary diving-related equipment as listed in Table XIII-5, and equipment for underwater still photography/video. These lists are considered to be representative. Actual inventories are as provided by NUWC.

### C. CONTRACTOR RESPONSIBILITIES

1. The Contractor shall provide Diving Services in accordance with the AUTEC Schedule of Operations, published Operations Directives, Workload Factors given in paragraph D, Applicable Documents cited in paragraph F, and other requirements stated below. Special requirements may be tasked by NUWC Work Order or Letter of Direction.

2. The Contractor shall provide all requisite SCUBA diving equipment: air compressor system(s); tanks; regulators; masks; fins; etc., as necessary to outfit Contractor diving personnel, and to provide for their safety. The Contractor shall provide, and maintain in an operational status, such SCUBA diving equipment and spares in sufficient quantity to ensure performance of the tasks

described at all times. U.S. Navy policy precludes Contractor use of any such equipment owned by the Navy.

3. - - - - - *deleted* - - - - -

4. The Contractor shall conduct all diving operations, and provide personnel qualified to perform all diving support operations, in compliance with Occupational Safety and Health Standards, Part 1910.401, Subpart T, "Commercial Diving Operations". Divers conducting operations on nuclear-powered ships and submarines will be trained for conducting such operations in accordance with Article 227 (Requirements for Divers) of U.S. Navy NAVSHIPS (C) 389-0153, Radiological Controls (U).

5. The Contractor shall arrange for manufacturer or other procured support for such equipment and tasks on a case-by-case basis considering cost effectiveness, schedule, or other requirements as approved by NUWC.

6. The Contractor shall maintain and operate the AUTEC dive boat and other Government furnished diving-related equipment in accordance with the standards and procedures established by applicable OCDs and/or as delineated in maintenance and operation manuals provided by the equipment manufacturers.

7. The Contractor shall abide by the AMS for all AUTEC diving related equipment. Maintenance of new equipment shall be based on manufacturer-recommended procedures and/or new AMS procedures to be developed by the Contractor.

8. The Contractor shall develop and maintain an inventory of Government-provided consumables, expendables, and repair/spare parts for all AUTEC diving-related equipment in accordance with the policies provided in Chapter XXI(1) of this Specification.

9. The Contractor shall submit all NUWC-required technical and administrative reports, described in Chapter XXV of this Specification, as pertain to support for AUTEC's Diving requirements.

10. As may be requested by NUWC, the Contractor shall provide compressed air for use by non-contractor personnel when conducting Government approved diving operations. The Contractor shall, as a minimum, obtain air samples from the air supply source (e.g. air compressor) on a semi-annual basis, and have such samples analyzed by a qualified independent laboratory to ensure that the air provided meets the Air Purity Standards specified by NAVSEA 0994-LP-01-9010/9020 for "Other Sources of Air". Records of such tests shall be maintained for a minimum of three years and shall be made available for inspection as required.

## D. WORKLOAD FACTORS

1. Occasional (3-4 events per year) diver support is required to support scheduled helicopter recovery of exercise weapons, mobile targets, etc. Such events typically occur when a MK-30 Target has been found to have deployed its air-flotation device, or when an expended exercise weapon or test vehicle is found to be floating horizontally. Diver support is not normally scheduled or required when vessel recovery techniques are employed.

2. Diver support, including recovery of exercise weapons, mobile targets, and other unmanned test vehicles must be provided during daylight hours, 365 days per year except during scheduled range maintenance periods approved by NUWC.

3. Approximately 400 diver-supported evolutions of all types are required each year. Of this total, approximately 24 evolutions are scheduled for CONUS or other off-Andros operations.

4. - - - - - *deleted* - - - - -

5. Diver support for marine vessel hull inspections and for servicing vessel propellers/hull zincs shall be as per the AMS requirements described in Chapter XVIII of this Specification.

## E. KEY PERSONNEL/PERSONNEL QUALIFICATIONS

None.

## F. APPLICABLE DOCUMENTS

Public Law 91-596;Occupational Safety and Health Act of 1970

29 Code of Federal Regulations (CFR) - Occupational Safety and Health Standards, Part 1910.401, Subpart T; Commercial Diving Operations

| | |
|---|---|
| NAVSEA 0994-LP-01-9010/9020; | U.S. Navy Diving Manual |

- - - - - *deleted* - - - - -

| | |
|---|---|
| NAVSHIPS (C) 389-0153; | Radiological Controls, Article 227, Requirements for Divers (U) |

- - - - - *deleted* - - - - -

- - - - - *deleted* - - - - -

| | |
|---|---|
| Other OCDs; | Relevant/Related OCDs as may be listed in Table XV-4 |
| APP 8-25G; | AUTEC Waterfront Procedures and Regulations |
| APP 11-5G; | Hurricane Plan, Andros Ranges |

- - - - - *deleted* - - - - -

AUTEC ANCILLARY DIVE EQUIPMENT

| Equipment | Mfr | Model No. | Qty |
|---|---|---|---|
| | *- - - - - deleted - - - - -* | | |
| Ramset Stud Gun | Olin | ZOGHD | 1 |
| Binoculars 7x50 | Bausch & Lomb | MARK 28 | 1 |
| Stopwatch | Heuer | Trackmate 1/5 | 1 |
| | | Rallymaster | 1 |
| | Wakmann | - | 2 |
| | America | MiL-S | 2 |
| Cable Cutter | Morse | 1A | 1 |
| | Pell | P | 1 |
| Sewing Machine | Consew | 206RB | 1 |
| 3/8" Drill | Black & Decker | 7190 | 1 |
| Boat | Boston Whaler | Guardian 22 | 1 |
| Outboard Motor, 100HP | OMC | E100WTLENE | 2 |
| Boat Trailer | S. E. Fabricators | 723 | 1 |
| Battery Charger | NAPA | 85-116 | 1 |
| Galvanometer | GE | W-8-411 | 1 |
| Cable Swaging Tool | ATI | AT520-JX | 1 |
| | Nat Tele | 635 | 1 |
| Power Vane | Chicago | - | 2 |
| Medical Kit | Schell | 2293363 | 1 |
| Portable Inhalator Kit | Air Products | 170-05 | 1 |
| Helmet, Helo | Gentex | SPH-38 | 2 |
| | | 68H1835-1 | 1 |
| Diver's Intercom Set | Helle | 3220 | 2 |
| Watch | Rolex | Submariner | 1 |
| | Seiko | SDE095 | 5 |
| Pneumatic Tools | Various | - | - |
| Computer | Compuadd | 486/33 | 1 |
| Cassette Recorder | Various | - | - |
| Monitor Video | Various | - | 2 |

Note: A list of underwater still photography/video equipment is included in Table XV-1.

Table XIII-5

## XIV. RESERVED FOR FUTURE USE

### A. GENERAL

### B. DESCRIPTION

### C. CONTRACTOR RESPONSIBILITIES

### D. WORKLOAD FACTORS

### E. KEY PERSONNEL/PERSONNEL QUALIFICATIONS

# XV. SUPPORT SERVICES

## 1. AUDIOVISUAL SUPPORT

### A. GENERAL

Audiovisual services are required as a means of making permanent records of transitory test events, disseminating information, documenting emergency situations, supporting public affairs activities, illustrating publications, and for enhancing briefing materials.

Such services are required to support both AUTEC and Range User requirements.

### B. DESCRIPTION

AUTEC's primary Audiovisual Facility is located in the CCB at Site 1 on Andros Island. A second facility is located at AUTEC's West Palm Beach, FL Headquarters to support CONUS events as needed. Provisions are made for still photography employing both digital and traditional media, closed-circuit television programming, and audio and video tape recording.

Equipment is provided for video and audio tape reproduction and editing as well as for reproduction of almost any type or color of digital copy from 2 inches X 2 inches through 8 inches X 12 inches. Included is the capability to photocopy drawings, graphic art, and other illustrations, as well as half tones (photographs) and to reduce/enlarge them. Reproductions can be positives or negatives, color or black and white, screened or unscreened prints, matte or glossy, 35 mm slides, color transparencies, etc. A high resolution film and flatbed scanner with computer graphical and photo editing capability, together with a Kodak Professional 8670 PS thermal printer for digital reproductions, is provided. No traditional (emulsion) film processing will be conducted on the AUTEC project.

Outside of the facilities, still photography, and/or video taping is required for:

- Documenting Emergencies
- Test Support
- Documenting Engineering Investigations
- Training Support
- Publications Support
- Public Information Activities Support

Services are required at various locations which include: Site 1 and the downrange sites on Andros Island; vessels at-sea; helicopters or fixed wing aircraft; AUTEC's West Palm Beach Headquarters; and the local area. At-sea transfers of personnel and equipment are sometimes necessary. A representative list of audio-visual equipment is presented in Table XV-1. Actual inventory is as provided by NUWC.

## C. CONTRACTOR RESPONSIBILITIES

1. The Contractor shall maintain sufficient AUTEC audiovisual equipment and related assets in an operational status at all times as are needed to perform the tasks described. Audiovisual support services shall be provided in accordance with the AUTEC Schedule of Operations, published Operations Directives, Workload Factors given in paragraph D, Applicable Documents cited in paragraph F, and other requirements stated below. The Contractor shall provide such services at Site 1, the downrange sites on Andros Island, aboard vessels at sea, aboard helicopters or fixed wing aircraft, at AUTEC's West Palm Beach Headquarters, or in the local area. Special requirements may be tasked by Work Order or Letter of Direction.

2. The general approach to accomplishing AUTEC's audiovisual support needs is that routine day-to-day tasks shall be performed by the Contractor. Arrangements for manufacturer or other procured services to support traditional (emulsion) film processing/printing as well as other occasional, extraordinary, or specialty requirements related to this work area shall be made by the Contractor on a case-by-case basis considering cost effectiveness, schedule, or other requirements as approved by NUWC.

3. The Contractor shall maintain, check-out, calibrate, and operate all of AUTEC's audiovisual equipment in accordance with the standards and procedures established by Applicable OCDs and/or as delineated in maintenance and operation manuals provided by equipment manufacturers.

4. The Contractor shall be responsible for the delivery of finished products to designated recipients in a timely manner (or as scheduled by applicable OD or Work Order). Customers needing traditional (emulsion) film processing/printing will be advised in advance as to the length of time such procured support services will require.

5. The general approach to corrective maintenance of AUTEC's Audiovisual Equipment is that it shall be performed by the Contractor. The Contractor shall arrange for manufacturer or subcontractor support for specific tasks on a case-by-case basis

considering cost effectiveness and other requirements as approved by NUWC.

6. The Contractor shall provide personnel qualified to perform the tasks described and to produce finished products of professional quality. Generally, equipment operators shall be capable of performing preventative maintenance.

7. The Contractor shall maintain a library of archived photo materials (originals/negatives/digital). With the concurrence of NUWC, the Contractor shall establish and implement procedures for inventory and periodic purging of such materials.

8. The Contractor shall provide technical support to Purchasing for procurement of audio-visual equipment including: specification writing; technical evaluation of proposals; cost review; quality review; technical qualification of sources; preparation of inspection and acceptance procedures; and conduct of acceptance tests.

9. The Contractor shall maintain AUTEC's Homepage, an electronic marketing document that can be accessed through a Web Internet browser. This document provides unclassified information about AUTEC to potential customers via the Internet. Homepage is to be maintained in Hypertext Mark-up language, and shall consist of a mixture of text and binary files such as pictures, video, and sound clips merged in an attractive, user-friendly format. Homepage updates shall be made based upon inputs provided by NUWC.

10. The Contractor shall provide audio-visual support for public affairs activities as requested by NUWC. Normally such events are arranged several weeks in advance and are scheduled during normal work hours; however, the Contractor is expected to support such events even if scheduled on very short notice and/or outside of normal work hours. The Contractor is expected to provide audio-visual support in emergency situations at any time.

11. As requested by NUWC, the Contractor shall provide support for producing and editing live, or taped, general and emergency programming material for broadcast on the information channel of AUTEC's Andros Island closed-circuit cable television system. See also Chapter VII of this Specification.

12. The Contractor shall develop and maintain an inventory of Government-provided consumables, expendables, and repair/spare parts to support AUTEC's audiovisual needs and equipment in accordance with the policies provided in Chapter XXI(1) of this Specification.

13. The Contractor shall be responsible for following appropriate security guidelines for classification, identification, marking, and safeguarding of classified audiovisual material as dictated by the subject matter. The Contractor shall maintain accurate records for accountability purposes. Specific administrative, operational, physical, and personnel controls are set forth in Chapter XXIII of this Specification and the current DoD Contract Security Classification Specification (DD Form 254) as appearing in Section J, Attachment (8), of this Contract.

14. The Contractor shall submit all NUWC-required technical and administrative reports, described in Chapter XXV of this Specification, as pertain to support of AUTEC's audiovisual function.

## D. WORKLOAD FACTORS

1. Audiovisual services shall operate during normal business hours on Andros Island five days per week (Monday through Friday). Extended hours are sometimes necessary, and emergency support must be available at all times.

2. The annual estimated workload is as follows:

| Activity/Product Type | Estimated Annual Amount |
|---|---|
| Completed Work Orders: | 700 |
| Range User Tests Supported: | 30 |
| Photo Production: | |
| Exposures | 4,000 |
| Black and White Images | 2,000 |
| Color Images | 10,000 |
| Slides/Viewgraphs | 1,500 |
| Polaroid Pictures | 600 |
| Film Positives | 400 |

- - - - - *deleted* - - - - -

*- - - - - deleted - - - - -*

| | |
|---|---|
| Closed-Circuit Television: | |
| Programming | 200 hrs. |
| Computer Editing | 200 hrs. |
| Videotaping: | |
| Original Footage | 150 hrs. |
| Duplicated Footage | 250 hrs. |
| Editing | 75 hrs. |
| Audiotaping: | |
| Original Footage | 25 hrs. |
| Duplicated Footage | 25 hrs. |
| Editing | 25 hrs. |

## E. KEY PERSONNEL/PERSONNEL QUALIFICATIONS

None.

## F. APPLICABLE DOCUMENTS

*- - - - - deleted - - - - -*

| | |
|---|---|
| Other OCDs; | Relevant/Related OCDs as may be listed in Table XV-4 |
| APP 11-5G: | Hurricane Plan, Andros Ranges |

# AUDIO-VISUAL EQUIPMENT

| Equipment | Mfr | Qty |
|---|---|---|
| PHOTO LAB ITEMS | | |
| CAMERAS | | |
| Digital Still | | |
| DC-210 Digital Camera | Kodak | 1 |
| DCS-620 Digital Camera | Kodak | 1 |
| DCS-315 Digital Camera | Kodak | 1 |
| Digital Video | | |
| DSR-200A Digital Camcorder | Sony | 1 |
| Emulsion, Still | | |
| Hasselblad | Hasselblad | 1 |
| - - - - - *deleted* - - - - - | | |
| - - - - - *deleted* - - - - - | | |
| - - - - - *deleted* - - - - - | | |
| 35mm Type MF-4, 250 | Nikon | 4 |
| 35mm Type F3 | Nikon | 4 |
| Polaroid 320; SLR680 | Polaroid | 2 |
| - - - - - *deleted* - - - - - | | |
| Video Analog | | |
| - - - - - *deleted* - - - - - | | |
| - - - - - *deleted* - - - - - | | |
| CamCorder L1A (HI-8 Kit) | Canon | 2 |
| - - - - - *deleted* - - - - - | | |
| VCRs | | |
| Digital | | |
| DSR-30 Digital VCR (Editing) | Sony | 1 |
| Analog | | |
| - - - - - *deleted* - - - - - | | |
| - - - - - *deleted* - - - - - | | |
| - - - - - *deleted* - - - - - | | |
| - - - - - *deleted* - - - - - | | |
| - - - - - *deleted* - - - - - | | |
| AG-5700 VCR (SVHS) | Panasonic | 2 |

Table XV-1

| | | |
|---|---|---|
| EVO-9650 VCR (Hi-8) | Sony | 1 |

Table XV-1

LENSES

- - - - - *deleted* - - - - -
- - - - - *deleted* - - - - -

| | | |
|---|---|---|
| Assorted 35mm | Nikon | 14 |
| 28-85mm Zoom | Nikon | 1 |
| 80-200mm Zoom | Nikon | 1 |
| 40mm | Zeiss | 1 |
| 80mm | Zeiss | 1 |
| 150mm | Zeiss | 1 |

Table XV-1

AUDIO-VISUAL EQUIPMENT

| Equipment | Mfr | Qty |
|---|---|---|
| PHOTO LAB ITEMS (CONT) | | |
| LENSES(CONT) | | |
| Video Zoom Lens | Canon | 1 |
| Stabilized Zoom Lens | Canon | 1 |
| MISC | | |
| - - - - - *deleted* - - - - - | | |
| PC/Pentium | CompuAdd | 1 |
| P2-400 Computer (Channel 4) | Micron | 2 |
| Computer Monitor, 17” (Channel 4) | Micron | 2 |
| Video Converter (Channel 4) | Folsom | 1 |
| - - - - - *deleted* - - - - - | | |
| Printer/Dot-Matrix | Panasonic | 1 |
| Scanner/Print | MicroTek | 1 |
| - - - - - *deleted* - - - - - | | |
| Slide Projector | Kodak | 1 |
| - - - - - *deleted* - - - - - | | |
| CamCorder Stabilizer | SteadiCam | 1 |
| - - - - - *deleted* - - - - - | | |
| - - - - - *deleted* - - - - - | | |
| - - - - - *deleted* - - - - - | | |
| Belt Battery Pack | NRG | 1 |
| - - - - - *deleted* - - - - - | | |
| - - - - - *deleted* - - - - - | | |
| Video Monitor | JVC | 1 |
| Video Monitor, 13" (2), 19" (1) | Panasonic | 3 |
| Video Monitor, 20" (1), 7" (4) | Panasonic | 5 |
| - - - - - *deleted* - - - - - | | |
| - - - - - *deleted* - - - - - | | |
| - - - - - *deleted* - - - - - | | |
| - - - - - *deleted* - - - - - | | |
| - - - - - *deleted* - - - - - | | |
| - - - - - *deleted* - - - - - | | |
| - - - - - *deleted* - - - - - | | |
| - - - - - *deleted* - - - - - | | |

Table XV-1 (cont.)

- - - - - *deleted* - - - - -
- - - - - *deleted* - - - - -

## AUDIO-VISUAL EQUIPMENT

| Equipment | Mfr | Qty |
|---|---|---|
| PHOTO LAB ITEMS (CONT) | | |
| MISC (CONT) | | |
| Slide Copier | Bowens | 1 |
| Studio Lighting Set | Speedotron | 1 |
| Video Lights (Tungsten/Set) | Berkey | 5 |
| Flash Meter/Luna-Star | Gossen | 1 |
| Microphone Kit | Nady/Samson | 1 |
| Assorted Photographic Attachments & Equipment | Various | 90 |
| OTHER ITEMS * | | |
| Camera, 46mm Scope | Tek | 4 |
| Camera, Oscilloscope | Tek | 1 |
| Camera, Underwater | Nikon | 1 |
| Camera, CCTV | Panasonic | 6 |
| Camera, Color Video | Various | 4 |
| Camera, Monochrome Video | Sony | 7 |
| Camera, HandyCam | Sony | 2 |
| Camera, Video Radar | RCA | 6 |
| Lens, CCTV Zoom | Panasonic | 4 |
| Lens, Closeup | -- | 2 |
| Lens, Boom | Zoomar | 6 |
| Lens, Underwater 15mm | Nikon | 1 |
| Lights | Various | 8 |
| Lamp, Underwater Video | Aqua | 1 |
| Meter, Flash | Gossen | 1 |
| Housing, Aluminum | Amphib | 1 |
| Reader, Print Microfilm | 3M | 1 |
| Projection System, Video | GE | 6 |
| Recorder, Video Tape | RCA | 2 |

*Not currently located in Photo-Lab

Table XV-1 (cont.)

## AUDIO-VISUAL EQUIPMENT

| Equipment | Mfr | Qty |
|---|---|---|
| OTHER ITEMS (CONT) * | | |
| Television, 50" Color | RCA | 2 |
| Viewer, Film | NAVORD | 1 |
| Projector, Overhead | Elmo | 1 |
| Projector, Opaque | VU-Lyte | 1 |
| Printer, Graphics Video | Sony | 1 |
| Processor, Film Automatic | Air Tec | 1 |

*Not currently located in Photo-Lab

Table XV-1 (cont.)

# XV. SUPPORT SERVICES (CONT.)

## 2. ADMINISTRATIVE SUPPORT

### A. GENERAL

Because of the limited number and skills mix of Government personnel assigned to AUTEC, the Contractor is required to perform a number of administrative and clerical tasks in support of Government operations.

### B. DESCRIPTION

Administrative and clerical support includes: Government travel reservations and ticketing; preparation and tracking of training requests; preparation and distribution of Work Orders; AUTEC's Command Religious Program; mail transportation, sorting, and distribution; operation of a central filing system; assisting the Navy Liaison Officer at Nassau in coordinating official visits to the Bahamas; data entry and preparation/transmittal of financial documents.

### C. CONTRACTOR RESPONSIBILITIES

1. The Contractor shall operate a Satellite Ticketing Office (SATO) reservation computer at AUTEC's West Palm Beach Headquarters which is linked to a Jacksonville, FL, travel agency that is under contract to NAVPTO, Jacksonville, FL. The function requires generating Government travel orders, maintaining a log of travel requests/orders, making airline, lodging, and car rental reservations, and printing-out airline tickets, for AUTEC's Government employees.

2. The Contractor shall provide support for AUTEC's Command Religious Program on Andros Island, conducted under the auspices of a Chapel Council as described in NUWCDETAUTECINST 1730.1 (Series). The Contractor shall provide a Chapel Coordinator, and other support to the Chapel Council in the conduct of AUTEC's Command Religious Program, including: contracting with, scheduling, and coordinating visiting clergy for scheduled Divine Services; ordering consumables as well as supplies requested by the Chapel Council and approved by NUWC; printing bulletins; supporting special events as approved by NUWC, etc..

3. The Contractor shall provide clerical support services at Site 1 on Andros Island to help expedite the processing of incoming and outgoing mail at AUTEC's Site 1 U.S. Navy Post Office. Clerical support does not include the handling of stamps or money, or responsibility for accountable mail.

4. The Contractor shall operate the Government's central filing system at AUTEC's West Palm Beach Headquarters following appropriate security guidelines for classification, identification, marking, and safeguarding classified documents/material as dictated by the subject matter. Specific administrative, physical, and personnel controls are set forth in Chapter XXIII of this Specification and the current DoD Contract Security Classification Specification (DD Form 254) as appearing in Section J, Attachment (9), of this Contract. Functions/responsibilities include:

a. Ordering and keeping up-to-date: charts; overlays; instructions; notices; and other literature and documents as requested by NUWC.

b. Receiving, sending, and maintaining records of classified documents and other materials as well as registered and certified U.S. mail.

c. Maintaining courier authorization files and preparing courier authorization letters/transmittal forms for handcarry items. Preparing/packaging pre-sail briefings and other handcarry packages as requested by NUWC. Preparing and disseminating (mail/fax) visit requests/security clearances for AUTEC travelers. Copying, distributing, and filing all visit requests/security clearances received by AUTEC.

d. Maintaining the Standard Navy Distribution List (SNDL). Logging, serializing, and maintaining file copies of incoming/outgoing correspondence. Routing and tracking incoming correspondence (mail will be opened by Government personnel to permit removal of Government-sensitive material). Preparing indicated number of copies and mailing/distributing serialized and other outgoing correspondence and documents. Preparing and mailing/FedExing any customer-requested AUTEC literature such as brochures, video tapes, manuals, charts, etc. making indicated number of copies of incoming correspondence and documents and distributing same to cognizant individuals.

e. Providing general typing support such as finalizing correspondence generated by originator into proper formats (i.e. letters, memorandums, training forms, etc.)

e. Preparing, processing, and tracking all training requests.

e. Preparing, tracking, and distributing 800 and 900 Series Work Orders.

e. Composing correspondence in support of administrative and clerical responsibilities.

i. Related tasks.

5. The Contractor shall provide support for the Navy Liaison Office at the American Embassy located at Nassau, Commonwealth of the Bahamas. Support is required for the following areas: coordination of official visits of U.S. military personnel, vessels and aircraft, to include obtaining necessary diplomatic clearances, arranging for provisions and accommodations, and providing briefings on Bahamian protocol and customs, as required. Related administrative support shall be provided as requested.

6. The Contractor shall review, process, and prepare transmittals for the following obligations and invoices: Single Line Item Consumption/Requisition Documents (Manual) (DD Form 250s); government printing obligations; vehicle gasoline receipts; telephone invoices; GSA credit card receipts; aviation fuel receipts from Range Users; and Into-Plane fuel receipts. The Contractor shall prepare quarterly summaries of telephone usage/systems costs in format required by NTCAMSLANT.

7. The Contractor shall collect, check for completeness in accordance with established guidelines, obtain authorized signatures, and enter NUWC time card information into the automated data bases and forward the cards to NUWC Division Newport RI. The Contractor shall maintain a travel order/voucher log and enter information into the automated data bases. Review travel claims/vouchers, prepared by travelers, for completeness, etc., make required number of copies, and forward same to PSA Jacksonville, FL, for payment/settlement.

8. The Contractor shall provide for finance office services at Site 1 on Andros Island, consisting of the sale of money orders and the cashing of both U.S. Government and personal checks. These services shall be made available to Range Users, official visitors, and assigned Government military and civilian personnel and their dependents. Availability to the Contractor's employees is at the discretion of the Contractor. The Contractor shall establish and adhere to regularly scheduled hours for these services; and establish reasonable limits/conditions on the value of checks that may be cashed and identification requirements for check cashing.

9. The Contractor shall process incoming correspondence, reports, instructions, etc., and determine appropriate action, collect data, maintain records, and prepare/submit reports (except DoD postal reports) as may be required by the Applicable Documents cited in paragraph F.

10. The Contractor shall submit all NUWC-required technical and administrative reports, described in Chapter XXV of this Specification, as pertain to the administrative support function.

11. The Contractor shall provide administrative support to the Navy Administrative Office, at Site 1 on Andros Island, on a full-time basis. Support is required for the central coordination of all administrative matters regarding Naval Undersea Warfare Center (NUWC) Detachment, AUTEC, official correspondence. The Contractor shall also provide liaison with the West Palm Beach, FL, Detachment and Personnel Support Detachment Jacksonville, FL, concerning matters of military pay, service record entries and verification, transfers and receipts, travel claims, advancements, and ordering and processing of Navy-wide exams for the approximately 20 U.S. Navy military personnel assigned to AUTEC's West Palm Beach, FL, and Andros Island facilities. Additionally, the Contractor shall support bookkeeping, accounting, and deposit activity for AUTEC's Religious Offering Fund, following the procedures and requirements of reference (f) to NUWCDETAUTECINST 1730.1 (Series) (i.e. SECNAVINST 7010.6 (Series) "Religious Offering Fund"), and prepare/submit monthly and quarterly Summary Reports to AUTEC's Chapel Council.

## D. WORKLOAD FACTORS

1. Estimated number of travel orders and associated lodging and rental car reservations is 80. SATO reservations are made for approximately 30 airline tickets per month.

2. Estimated amount of mail to/from AUTEC's WPB Headquarters:

a. Incoming: 900 lbs./month

b. Outgoing: 900 lbs./month

3. The Chapel Coordinator function is estimated to require one half workyear of effort.

4. Three to twelve pre-sail packages are prepared monthly depending on the test schedule. Approximately 240 incoming security clearances and associated visit requests are received each month.

5. The estimated amount of correspondence to/from AUTEC's WPB Headquarters which require distribution/mailing is:

a. Incoming: 85 per month.
b. Outgoing: 75 per month.
c. Customer Mailing: 35 per month.

6. Estimated number of travel claims/vouchers to be completed, reviewed, and forwarded for payment/settlement is 80 per month.

7. Estimated number of hours for general typing support is 80 per month.

8. Estimated average number of Government financial documents processed is:

| | | |
|---|---|---|
| a. | Obligations/invoices: | 350/month |
| b. | Government travel orders /vouchers: | 200/month |
| c. | Government time cards: | 50/weekly |
| d. | Into-Plane fuel receipts: | 50/month |
| e. | Aviation fuel receipts: | 100/month |
| f. | Telephone invoices: | 9/month |

9. Mail sorting at AUTEC's Site 1 post office requires one workyear of effort.

10. Support to the Navy Liaison Officer is estimated to require one workyear of effort.

## E. KEY PERSONNEL/PERSONNEL QUALIFICATIONS

None.

## F. APPLICABLE DOCUMENTS

DoD Postal Manual Volume I and II

| | |
|---|---|
| OPNAVINST 1730.1 (Series); | Religious Ministries in the U.S. Navy |
| NUWCDETAUTECINST 1730.1 (Series); | Command Religious Program |
| Other OCDs; | Relevant/Related OCDs as may be listed in Table XV-4 |
| APP 1-98G; | Mail Services - AUTEC Project |

# XV. SUPPORT SERVICES (CONT.)

## 3. ORIENTATION AND TECHNICAL TRAINING

### A. GENERAL

Personnel who are well trained in their specialty field, the specific requirements of their assigned duties, and the function and mission of AUTEC are a valuable program resource. To ensure a competent and qualified workforce, AUTEC supports an on-going in-house program of formal, informal, and on-the-job training. Off-base training, at manufacturer's facilities, other Government activities, etc., is provided under specific circumstances.

### B. DESCRIPTION

AUTEC is unique, both in its location and in the variety and complexity of its facilities.

AUTEC is a U.S. Government facility established by treaty agreement in a foreign country. Personnel who are assigned to, or visiting, Andros Island in support of AUTEC are subject to the conditions and jurisdictional agreements of the treaty, and must be acquainted with its provisions. It is equally important that personnel be acquainted with why AUTEC was established, what AUTEC's mission is, how AUTEC is organized and operated, and the inter-relationships between Government and Contractor personnel.

Specific training courses for technical and non-technical personnel are required in order to assure that any requisite unique skills are acquired and maintained as may be needed to carry-out assigned tasks and responsibilities. A list of training courses is presented in Table XV-2.

General training, in areas such as Total Quality Leadership (TQL), security, safety, first aid, etc., is required on an on-going basis.

To facilitate formal, classroom training, AUTEC provides a dedicated Technical Training Facility at Site 1 on Andros Island.

### C. CONTRACTOR RESPONSIBILITIES

1. The Contractor shall support AUTEC's Orientation and Technical Training requirements in accordance with the Workload Factors given in paragraph D, Applicable Documents cited in paragraph F, and other requirements stated below. Special requirements may be tasked by NUWC Work Order or Letter of Direction.

2. The general approach to accomplishing AUTEC's training needs shall be by drawing from within the Contractor's own workforce. Arrangements for procured services to support occasional, extraordinary or specialty requirements related to this work area shall be made by the Contractor on a case-by-case basis considering cost effectiveness, schedule, or other requirement as approved by NUWC.

3. The Contractor shall be responsible for providing personnel under this contract who are generally qualified to perform their assigned tasks and responsibilities without additional technical training. Technical training needed to meet AUTEC-unique requirements shall be provided as required by the task(s) at hand.

4. The Contractor shall implement an orientation program for all newly-hired personnel. This orientation shall include security training/awareness as described in Chapter XXIII of this Specification, safety training as described in Chapter XXII(1) of this Specification, an introduction to Total Quality Leadership as described in Chapter XVII of this Specification, plus any other material deemed appropriate by the Contractor. New employees and their dependants shall also be provided with all information necessary to ensure that they are familiar with AUTEC's mission, current organization, operation, and Government/contractor as well as U.S./Bahamian Government interrelationships and treaty agreement provisions. See also Attachment (2).

5. The Contractor shall provide technical training programs for personnel involved in operating and maintaining unique AUTEC range systems, test support systems and equipment, and AUTEC's vessels, to assure that they obtain the skills and qualifications/certifications required to effectively accomplish their assigned tasks.

6. The Contractor shall provide non-technical training for base support, public works, physical security, and personnel in other such areas as is necessary to ensure that they obtain such unique skills as may be required to effectively accomplish their assigned tasks. Contractor personnel assigned to perform physical security functions must complete both Phase I (initial) and Phase II (annual) training as required by OPNAVINST 5530.14 (Series). See also Chapter XXIII of this Specification.

7. The Contractor shall provide formal (classroom) and on-the-job training as appropriate. Course content and instructional materials shall be appropriate for the skill-level and application.

8. The Contractor shall develop and implement an easily accessible data base record file of all training and certifications

received by each individual employee. This data base shall be accessible by area managers for the purpose of reviewing and meeting certification requirements, or for other management purposes. Such training/certification requirements are addressed in various other chapters of this Specification.

9. The Contractor is encouraged to implement an upward mobility training program directed at highly motivated nontechnical personnel who desire to learn technical skills in order to upgrade their position.

10. The Contractor shall encourage the cross-training of personnel to the maximum degree feasible.

11. The Contractor shall develop and/or modify training programs and courses as may be necessary to reflect changes in AUTEC's facilities and capabilities, as well as changes in external requirements.

12. The Contractor shall implement on-going training programs in areas of general administrative interest such as security, safety, first-aid, etc. The Contractor shall provide on-going training for applicable personnel in the use of AUTEC's Information Technology Systems which shall include end user programs available on the VAX computer at AUTEC's West Palm Beach Headquarters (see Chapter XXV of this Specification) as well as training in microcomputer programs for IBM PCs and compatibles (see Chapter XI(1) of this Specification), to include:

a. Word processing software.

b. Spreadsheet software.

c. Operating systems/operating environments software.

d. As-required for specialty software such as presentation graphics, illustration graphics, database management, communications, and project management.

13. The Contractor shall make training programs and courses available to Government and other personnel as may be requested by NUWC.

14. The Contractor shall make personnel available, as requested/approved by NUWC, to attend training courses presented at manufacturer's facilities, or at other Government activities, etc., as may be required to obtain critical skills important to AUTEC. Technical personnel may be required to attend directly, or training personnel may be required to attend in order to develop courses for subsequent use at AUTEC.

15. The Contractor shall, as requested/approved by NUWC, arrange for the on-site presentation of courses or seminars by others if such is deemed appropriate.

16. The Contractor shall develop and maintain an inventory of Government-provided materials, consumables, expendables, equipment, and spare/repair parts as needed to support AUTEC's training requirements in accordance with the policies provided in Chapter XXI(1) of this Specification.

17. The Contractor shall, in accordance with AUTEC's Hazard Communication (HAZCOM) Plan, assure that all personnel are familiar with all hazardous materials with which they may be required to work. The Contractor shall similarly provide specific training programs for personnel assigned to respond to accidents (e.g. spills or releases) involving hazardous materials. See also Chapters XXII(1) and XXII(2) of this Specification.

18. The Contractor shall assure that all personnel with occupational exposure to blood or other potentially infectious material(s) are properly trained, and that records of such training received by each individual are maintained, in accordance with the requirement of AUTEC's Bloodborne Pathogens (BBP) program (Attachment 1 to APP 11-12G). See also Chapter XXII(1) of this Specification.

19. The Contractor shall provide a Lead Training Instructor. This person, assisted by others, shall be responsible for performing/overseeing the following tasks:

a. Developing/maintaining training course materials for both formal and on-the-job training programs.

b. Scheduling, promoting, and presenting training courses.

c. Ensuring the effectiveness of methods of presentation/content and providing adequate student critique opportunity.

d. Maintaining training records.

e. Arranging for on-site/off-site training by others as approved by NUWC.

f. Identify and coordinate with the Audiovisual Support Group the production of training courses and training material which would be appropriate for self learning video presentation.

20. The Contractor shall submit all NUWC-required technical and administrative reports, described in Chapter XXV of this Specification, as pertain to support of the training function.

## D. WORKLOAD FACTORS

1. Training efforts will be supported during the normal workweek at both AUTEC's West Palm Beach Headquarters and on Andros Island.

2. It is estimated that the preparation of the combination of 25 of the following will be required each year: a) new courses, b) updating/revision of existing courses and c) the generation of self learning videos.

3. All newly hired employees will receive adequate orientation training, and training in their assigned tasks as deemed appropriate.

4. On-going administrative training courses will be presented as needed.

5. The courses presented in Table XV-2 will be offered approximately in accordance with the frequency indicated.

## E. KEY PERSONNEL/PERSONNEL QUALIFICATIONS

1. Key Personnel: None.

2. Personnel Qualifications:

a. **Lead Training Instructor** To successfully execute the tasks and responsibilities described, the person assigned should as a minimum:

1. Have a BS degree and five years direct experience, or have 10 years direct experience, and progressive responsibility as described below.

2. Have direct experience and progressive responsibility in the technical training field, including direct presentation/conduct of training courses, assessment of training needs and requirements, development of course materials (handouts, videos, manuals, etc.), and maintenance of related administrative records.

3. Have excellent verbal and written communication skills.

## F. APPLICABLE DOCUMENTS

| | |
|---|---|
| OPNAVINST 5530.14 (Series); | DoN Physical Security and Loss Prevention |
| OCD-(15.3)-00-XX; | Soldering Certification Program |
| Other OCDs; | Relevant/Related OCDs as may be listed in Table XV-4 |

(AUTEC) Hazard Communication (HAZCOM) Plan

# AUTEC TRAINING COURSES

| COURSE | CLASS HOURS | FREQUENCY |
|---|---|---|
| TECHNICAL: | | |
| AUTEC Maintenance System | 3.5 | As Req'd |
| AUTEC Configuration Management System | 3.5 | As Req'd |
| Introduction to In-Air System | 4.0 | As Req'd |
| AIRS System (Block Level) | 32.0 | As Req'd |
| AIRS Folsom Digitizer (Operator) | 4.0 | As Req'd |
| AIRS RTR Radar (Technical) | 18.0 | As Req'd |
| AIRS Solid State Track Radar (Technical) | 96.0 | As Req'd |
| AIRS Digital Modification (Technical) | 64.0 | As Req'd |
| AIRS Tracking Radar Integration and Monitoring System Operation | 2.0 | As Req'd |
| Introduction to In-Water System | 4.0 | As Req'd |
| In-Water System (Block Level) | 32.0 | As Req'd |
| In-Water System (Digital) (Technical) | 88.0 | As Req'd |
| AUTEC Timing System (Block Level) | 32.0 | As Req'd |
| Soldering Certification (ANSI Joint Standard [J-STD]-001B) | 24.0 | As Req'd |
| Soldering Recertification | 16.0 | 18 Months |
| Soldering Inspector Certification (ANSI J-STD-001B) | 12.0 | As Req'd |
| Soldering Inspector Recertification | 12.0 | 18 Months |
| Electrostatic Discharge Safety | 3.0 | As Req'd |
| Downrange Maintenance Specialists (Downrange Generator Operator) | 17.0 | As Req'd |
| Introduction to MK-30 Target (Block Level) | 20.0 | As Req'd |
| Basic Introduction to the MK-30 Target | 6.0 | As Req'd |
| MK-30 Theory of Operation (Technical) | 64.0 | As Req'd |
| OTTO Fuel II (MK-46 and MK-48 Torpedoes) (NAVSEA S6340-AA-MMA-010) | 4.0 | 4/Year |
| OTTO Fuel II Video Tape (Shipboard version of above) | 1.0 | 4/Year |
| MK-30 Battery Preparation (NAVSEA SW581-C1-MMI-250/MK30) | 30.0 | As Req'd |
| Introduction to Weapons | 4.0 | As Req'd |
| MK-48 Postrun Procedures | 32.0 | As Req'd |
| Torpedo Retriever Offload | 2.0 | As Req'd |
| MK-46 Torpedo Postrun Procedures | 6.0 | As Req'd |
| MK-50 Torpedo Recovery (Ground Crew) | 8.0 | As Req'd |
| REXTORP (Recoverable Exercise Torpedo) | 16.0 | As Req'd |
| Postrun Recovery/Handling U.K. Weapons | 4.0 | As Req'd |
| Explosives Certification Theory (NAVSEA OP5) | 40.0 | As Req'd |

Table XV-2

| | | |
|---|---|---|
| Explosives Certification Theory (Computer-Based Training) | 24.0 | As Req'd |

# AUTEC TRAINING COURSES

| COURSE | CLASS HOURS | FREQUENCY |
|---|---|---|
| TECHNICAL (CONT.): | | |
| Introduction to the STS System | 6.0 As Req'd | |
| Sonobuoy Tracking System (Technical) | 16.0 As Req'd | |
| Control of Government Property | 1.0 | As Req'd |
| AUTEC Fuel Handling Procedures | 12.0 | As Req'd |
| Torpedo Recovery (Marine Department) | 3.0 | As Req'd |
| MK-39 MOD 0 Exp. Mobile ASW Training Target | 3.0 As Req'd | |
| Time Lapse Video Recorder Operation | 3.0 As Req'd | |
| AUTEC Fuels Truck Driver Certification (Aviation) | 32.0 As Req'd | |
| AUTEC Diesel Fuel Truck Driver Certification | 8.0 As Req'd | |
| Shipboard Winches | 32.0 | As Req'd |
| Range User Communications Course | 3.5 As Req'd | |
| MK-59 Torpedo Tube Launcher Systems | 16.0 | As Req'd |
| Telescoping Target Launcher MK-30 | 6.0 As Req'd | |
| Large Area Tracking Range (LATR) | 24.0 As Req'd | |
| LATR (Participant Instrumentation Package) | 12.0 As Req'd | |
| Lightning Protection (Video) | 1.0 | As Req'd |
| COMPUTER APPLICATIONS: | | |
| Microsoft Windows 95/98 | 4.0 | As Req'd |
| Microsoft Word Introduction | 4.0 | As Req'd |
| Microsoft Word Intermediate | 4.0 | As Req'd |
| Microsoft Word Advanced | 4.0 | As Req'd |
| Microsoft Excel Introduction | 4.0 | As Req'd |
| Microsoft Excel Intermediate | 4.0 | As Req'd |
| Microsoft Excel Advanced | 4.0 | As Req'd |
| Microsoft Access Introduction | 4.0 As Req'd | |
| Microsoft Access Intermediate | 4.0 As Req'd | |
| Microsoft Access Advanced | 4.0 | As Req'd |
| Microsoft PowerPoint Introduction | 4.0 | As Req'd |
| Microsoft PowerPoint Intermediate | 4.0 | As Req'd |
| Microsoft PowerPoint Advanced | 4.0 | As Req'd |
| Microsoft Exchange Introduction | 4.0 | As Req'd |

Table XV-2 (cont.)

Table XV-2 (cont.)

# AUTEC TRAINING COURSES

| COURSE | CLASS HOURS | FREQUENCY |
|---|---|---|
| **TQL TRAINING MODULES:** | | |
| Quality Management at AUTEC (Orientation for New Hires) | 0.5 | As Req'd |
| Quality Management at AUTEC (for Teams) | 1.0 | As Req'd |
| Quality Management at AUTEC (for Managers) | 4.0 | As Req'd |
| Tools for Integrated Product Teams Workshop | 1.0 | As Req'd |
| Tools for Process Action Teams Workshop | 1.0 | As Req'd |
| Team Skills and Concepts | 1.0 | As Req'd |
| Communication Skills and Decision Making Tools | 2.0 | As Req'd |
| Data Gathering & Analysis Tools | 2.0 | As Req'd |
| Baseline Process Workshop | 8.0 | As Req'd |
| Facilitation Workshop | 4.0 | As Req'd |
| **ENVIRONMENTAL, SAFETY & HEALTH, AND FIRE/SECURITY COURSES:** | | |
| Respiratory Protection (Air Purifying & Supplied Air) (Initial) (29CFR1910.134) | 3.0 | As Req'd |
| Respiratory Protection (Air Purifying & Supplied Air) (Recertification) (29CFR1910.134) | 3.0 | Annually |
| Self-Contained Breathing Apparatus (Fire Department) (Initial) (29CFR1910.134) | 4.0 | As Req'd |
| Self-Contained Breathing Apparatus (Fire Department) (Recertification) (29CFR1910.134) | 4.0 | Annually |
| Hearing Conservation (29CFR1910.95) | 1.0 | As Req'd |
| Lead Hazard Awareness (29CFR1910.102 | (Briefing Sheet) | As Req'd |
| Confined Space Entry (Initial) (29CFR1910.146) | 24.0 | As Req'd |
| Confined Space Entry (Refresher) (29CFR1910.146) | 24.0 | As Req'd |
| Lockout/Tagout (29CFR1910.147) | 2.0 | As Req'd |
| First Aid (Fire Department) (29CFR1926.50) | 6.0 | As Req'd |
| CPR Training (Fire Department/Range Support) | 4.0 | As Req'd |
| Supervisory Safety Training (29CFR1926.21) | 1.0 | Monthly |
| Hazardous Communications (29CFR1910.1200) | 1.0 | As Req'd |
| Electrical Safety (29CFR1910.332) | 1.0 | As Req'd |
| Fall Protection – Towers (Initial) (29CFR1926.503) | 12.0 | As Req'd |
| Fall Protection – Towers (Refresher) (29CFR1926.503) | 12.0 | Annually |
| Fall Protection – Roofs & Tanks (Initial) (29CFR1926.503) | 4.0 | As Req'd |
| Fall Protection – Roofs & Tanks (Refresher)(29CFR1926.503) | 4.0 | Annually |
| Scaffolding Training – Competent Person (Initial) (29CFR1926.451) | 8.0 | As Req'd |

Table XV-2 (cont.)

| | | |
|---|---|---|
| Scaffolding Training – Competent Person (Refresher) (29CFR1926.451) | 8.0 | Annually |

AUTEC TRAINING COURSES

| COURSE | CLASS HOURS | FREQUENCY |
|---|---|---|
| ENVIRONMENTAL, SAFETY & HEALTH, AND FIRE/SECURITY COURSES (CONT.): | | |
| Scaffolding Training – User (29CFR1926.451) | 4.0 | As Req'd |
| HAZWOPER (Hazardous Waste Operator) (29CFR1910.120) | 40.0 | As Req'd |
| HAZWOPER (Managers) (29CFR1910.120) | 8.0 | As Req'd |
| DOT HM 181/126 (49CFR171-178) | 24.0 | As Req'd |
| Asbestos Survey (Initial) (29CFR1910.1001) | 24.0 | As Req'd |
| Asbestos Survey (Refresher) (29CFR1910.1001) | 8.0 | Annually |
| OSOT (On-Scene Operators Training) (29CFR1910.120) | 24.0 | Annually |
| Confined Space Competent Person (29CFR1910.146) | 24.0 | Annually |
| High Angle (Rope Rescue) & Confined Space - Rescue (Initial) (29CFR1910.120) | 40.0 | As Req'd |
| High Angle (Rope Rescue) & Confined Space – Rescue (Refresher) (29CFR1910.120) | 40.0 | Annually |
| HAZMAT Technician (Initial) (29CFR1910.120) | 40.0 | As Req'd |
| HAZMAT Technician (Recertification) (29CFR1910.120) | 40.0 | Annually |
| Shipboard Fire Fighting | 24.0 | As Req'd |
| Emergency Medical Technician Recertification | 32.0 | Biennially |
| Water Rescue Training (29CFR1910.410) | 40.0 | As Req'd |
| Forklift Safety (29CFR1910.178) | 6.5 | As Req'd |
| Overhead Crane Operator Safety (29CFR1910.179) | 8.0 | Annually |
| Basic Food Sanitation (New Hires) (NAVMED P-5010) | 1.0 | As Req'd |
| Downrange Food Sanitation (Video) | 1.0 | As Req'd |
| Hazardous Materials Regulations (49CFR) | 22.0 | As Req'd |
| Breath Alcohol Technician Training | 8.0 | As Req'd |
| Breath Analyzer Calibration | 4.0 | As Req'd |
| Building Energy Monitor Training (Video) | 1.0 | As Req'd |
| HAZCOM Video (New Hires) (29CFR1910.1200 | 0.5 | As Req'd |
| Bloodborne Pathogen Training (Video) (29CFR1910.1030) | 1.0 | As Req'd |
| Back Injury Prevention (NAVOSH) | 1.0 | Annually |
| Guard Force Phase I (Initial) (OPNAVINST 5530.14) (New Hires) | 16.0 | As Req'd |
| Guard Force Phase II (Refresher) (OPNAVINST 5530.14) | 8.0 | Annually |
| CONSTRUCTION/HEAVY EQUIPMENT OPERATOR TRAINING/CERTIFICATION: | | |
| Crane Operator Training/Certification (NAVFAC P307) | 40.0 | As Req'd |
| Winch Operator Training/Certification (NAVFAC P307) | 24.0 | As Req'd |
| Construction Equipment Operator Training/Certification | 16.0 | As Req'd |

Table XV-2 (cont.)

Table XV-2 (cont.)

# XV. SUPPORT SERVICES (CONT.)

## 4. AUTEC PROJECT DOCUMENTS SUPPORT

### A. GENERAL

A project as large and complex as AUTEC can function smoothly only if operations are conducted in a controlled manner, personnel know and understand their tasks and responsibilities, and systems and equipment are properly operated and maintained. To achieve these goals, AUTEC has developed a system of internal programs, documents, and related controls which define how daily operations are to be conducted, contingency situations handled, and how configuration control of AUTEC's myriad equipment and systems shall be maintained.

AUTEC also relies upon reference material, in the form of technical and procedural publications, manuals,and other documents from outside sources, manufacturers, etc., both to operate and maintain the various systems, equipment, and facilities and to ensure that personnel are provided access to adequate technical information at all times.

### B. DESCRIPTION

#### 1. Internal Documents/Programs

a. Joint AUTEC Project Procedures (APPs):

APPs, which are developed jointly by the Contractor and NUWC, are intended to inform both Government and Contractor personnel of those agreed policies and procedures which affect primarily all personnel resident at AUTEC's Andros Island Detachment. Some APPs, however, do also apply to personnel located at AUTEC's West Palm Beach Detachment. APPs shall not make specific reference to AUTEC's M&O Contractor by name, or to specific M&O Contractor organizational titles or to individual names. Only M&O tasks/requirements cited in this contract (e.g. security/housing/air operations/etc.) shall be addressed. Company specific, Contractor-related information, required to understand/implement the intent of each such document may be developed by the Contractor. Documents remain in effect until superseded. A list of current APPs is provided in Table XV-3. The list should, however, be interpreted as representative due to the dynamic nature of the APP system.

b. Operating Control Directives (OCDs):

OCDs are developed to define operating responsibilities, requirements, and detailed procedural instructions and methodologies for critical operating positions and functions of an on-going nature. OCD's are numbered as follows:

**(XX) - XX - XX**

| Specification Chapter/ subchapter to which the document primarily applies. | Sequence number within the list of documents | Number | Revision |
|---|---|---|---|

OCDs shall not make specific reference to AUTEC's M&O Contractor by name, or to specific M&O Contractor organizational titles or to individual names. Only M&O tasks/requirements cited in this contract (e.g. security/housing/air operations/etc.) shall be addressed. Company specific, Contractor-related information, required to understand/implement the intent of each such document may be developed by the Contractor. Documents remain in effect until superseded. A list of current OCDs is provided in Table XV-4. The list should, however, be interpreted as representative due to the dynamic nature of the OCD system.

c. AUTEC Reference/Policy Documents:

These publications are developed/maintained to provide overviews of AUTEC's capabilities, promulgate specific technical information, and/or to "institutionalize" policy/guidance relative to specific areas of concern. A list of current AUTEC Reference/Policy Documents is provided in Table XV-5.

d. AUTEC Maintenance System (AMS):

The AMS, a modified version of the Navy's Maintenance and Material Management (3M) System, is a preventive and corrective maintenance program designed to optimize the benefits of time spent on maintenance while providing for the maximum readiness and useability of all of AUTEC's instrumentation, operations equipment, and vessels. The AMS provides for scheduled maintenance, based upon manufacturer-recommended schedules and procedures, and for feed-back of both scheduled and

corrective maintenance performed. Through this process, the AMS is utilized by the Contractor to:

1. Establish and implement uniform maintenance standards, procedures, and periodicity requirements.

2. Implement desirable changes to existing maintenance standards, procedures, and/or periodicities identified through analysis of information gained by analyzing documented maintenance and repair actions.

3. Reduce the overall burden on maintenance personnel.

- - - - - *deleted* - - - - -

In addition to the above, there are specific, Navy-mandated maintenance systems required in three technical areas: MK-30 Mobile Target Support, Acoustic Tracking Equipment (ATE), and for AUTEC's vessels, as described in Chapters VIII, XII, and XVIII, respectively, of this Specification.

e. AUTEC Configuration Management System:

Precise records of the as-built design, physical and functional details, and performance characteristics of all range instrumentation and operations support equipment are required to maintain existing facilities, to procure repair/spare parts, as well as for developing subsequent improvements or new, interfacing hardware. Such records, whether drawings or other engineering documents are required by AUTEC's Configuration Management System. The program also provides strict guidelines and methods for proposing, developing, revising, reporting, and monitoring the status and implementation of all activities within the system. OCD-(15.4)-06-XX and OCD-(21.1)-15-XX set forth specific procedures for this system.

2. **Reference Documents**

a. A Technical Library, located at Site 1 on Andros Island, has been established for use by Contractor, Government, and Range User personnel. At present, the library contains approximately 3500 publications/documents.

The functions of the library are to:

1. Be AUTEC's single source for procurement of all Government and commercial documents, publications, general reference materials, and periodicals as are required to support the AUTEC mission.

2. Receive, catalog, and control all unclassified reference documents, publications, and reference materials.

3. Distribute such documents, as may be appropriate, to other AUTEC organizations for retention.

4. Obtain, and maintain on file, up-to-date versions of all Applicable Documents cited in this Specification, and such additional reference documents and publications, etc., which may have been cited in the Contractor's Proposal, and thus made part of this contract by reference. Canceled or superseded documents, publications, etc., may be destroyed, although proper traceability records must be kept, and the superseding documents, publications, etc., must subsequently be maintained on file.

5. Provide such services as would normally be expected of a technical library in a large private corporation, including research for technical information.

b. Classified documents, ordered through the library, are to be separately receipted/controlled, as described in Chapter XXIII of this Specification.

## C. CONTRACTOR RESPONSIBILITIES

1. The Contractor shall maintain sufficient AUTEC documentation support equipment and related assets in an operational status at all times as are needed to perform the tasks described. Documentation support services shall be provided in accordance with the Workload Factors given in paragraph D, Applicable Documents cited in paragraph F, and other requirements stated below. Special requirements may be tasked by Work Order or Letter of Direction.

2. The general approach to accomplishing AUTEC's documentation support needs is that routine day-to-day tasks shall be performed by the Contractor. Arrangements for manufacturer or other procured services to support occasional, extraordinary, or specialty requirements related to this work area shall be made by

the Contractor on a case-by-case basis considering cost effectiveness, schedule, or other requirements as approved by NUWC.

3. The Contractor shall maintain, check-out, calibrate, and operate all of AUTEC's document support equipment in accordance with the standards and procedures established by applicable OCDs and/or as delineated in maintenance and operation manuals provided by equipment manufacturers.

4. The general approach to corrective maintenance of AUTEC's documentation support equipment is that it shall be performed by the Contractor. The Contractor shall arrange for manufacturer or subcontractor support for specific tasks on a case-by-case basis considering cost effectiveness and other requirements as approved by NUWC.

5. The Contractor shall maintain and operate document copiers and drawing plotting (electrostatic) equipment at AUTEC's West Palm Beach Headquarters and at Site 1 on Andros Island. No such equipment shall be added to, or deleted from, AUTEC's inventory without specific permission from NUWC. At present, such equipment includes:

| Equipment | WPB HQ | ANDROS IS |
|---|---|---|
| Document Copy Machines | 8 | 33 |
| "E" Size Electrostatic Plotters | 1 | 2 |

6. The Contractor shall provide technical support to Purchasing for procurement of documentation support equipment including: specification writing; technical evaluation of proposals; cost review; quality review; technical qualification of sources; preparation of inspection and acceptance procedures; and conduct of acceptance tests.

7. The Contractor shall develop and maintain an inventory of Government-provided consumables, expendables, and repair/spare parts to support AUTEC's project document needs and equipment in accordance with the policies provided in Chapter XXI(1) of this Specification.

8. The Contractor shall provide qualified personnel: technical writing; editing; typing (typewriter and word processor); drafting; (including CAD); technical illustrating personnel, etc., as are required to develop and produce finished products of professional

quality and to maintain all of AUTEC's project documents, AMS, etc.

9. The Contractor shall be responsible for the delivery of finished products in a timely manner (or as scheduled by NUWC, WO, LD, etc.).

10. The Contractor shall maintain and operate the Technical Library at AUTEC's site 1 on Andros Island in accordance with OCD-(15.4)-23-XX. The Contractor shall provide a Technical Librarian who shall be qualified to perform and/or oversee the following tasks:

a. Determining the proper source of, and the subsequent ordering of requested documents and periodicals.

b. Developing recommendations for procuring documents and periodicals of general interest and application.

c. Cataloging reference documents, technical publications, and commercial publications shall be based on the American Library Association guidelines as specifically defined in COMMONSENSE CATALOGING and THE CUTTER-SANBORN THREE FIGURE AUTHOR TABLES. Government publications shall be cataloged in accordance with the IBM compatible software program database TECHNICAL PUBLICATIONS LIBRARY PROGRAM provided by the Naval Air Technical Services Facility and documented by NAVAIR 00-25-100 Technical Manual.

d. Operating a Library loan and issue system.

11. The Contractor shall prepare, maintain up to date, and control Operating Control Directives in accordance with OCD-(15.4)-05-XX, and ensure submission of:

a. Requests for Document Changes.
b. Document Review Notices.
c. Document Change Notices.

The Contractor shall additionally adhere to the requirements of NUWCDETAUTECINST 8023.1 (Series) for preparation of all ordnance-related (e.g. ammunition or explosives) Operating Control Directives.

12. The Contractor shall prepare, maintain up to date, and control AUTEC's various Reference/Policy documents. See Table XV-5 for specific update requirements.

13. The Contractor shall prepare, maintain up to date, and control APPs.

14. The Contractor shall abide by the AMS as described in OCD-(15.4)-02-XX, develop AMS procedures for new equipment and systems, and ensure compliance with/submission of:

a. Work Center Planned Maintenance System Records.

b. Cycle/Quarterly PMS Schedules.

c. Maintenance Requirement Cards.

d. Repair Report Cards.

e. Electronics/Operations Equipment Inspection Reports.

f. Requests for Document Changes.

g. Document Change Notices.

The Contractor shall gather, review, and analyze AMS repair data for evidence of trends or occurrences which would indicate the desirability of change to existing requirements, procedures, schedule, or scope. The Contractor shall implement such changes as may be warranted.

15. The Contractor shall abide by the AUTEC documentation Configuration Management System as described in OCD-(15.4)-06-XX and AUTEC's Engineering Planning and Cost Estimating System as described in OCD-(15.4)-01-XX. The Contractor shall prepare, maintain, and control the following in support of these programs:

a. Engineering Drawings.

b. Equipment Manuals.

c. Engineering Field Changes (EFCs).

d. Modification Proposals.

e. Equipment Addition/Deletion Notices.

f. AUTEC Master Drawing List.

g. AUTEC Site Drawing List.

16. The Contractor shall provide for configuration control of AUTEC's electronics equipment in accordance with OCD-(21.1)-15-XX.

17. The Contractor shall be responsible for following appropriate security guidelines for classification, identification, marking, and safeguarding of classified documents/material as dictated by the subject matter. The Contractor shall maintain accurate records for accountability purposes. Specific administrative, operational, physical, and personnel controls are set forth in Chapter XXIII of this Specification and the current DoD Contract Security Classification Specification (DD Form 254) as appearing in Section J, Attachment (8), of this Contract.

18. The Contractor shall submit all NUWC-required technical and administrative reports, described in Chapter XXV of this Specification, as pertain to AUTEC's project document support.

## D. WORKLOAD FACTORS

1. AUTEC Reference/Policy Documents will be updated in accordance with the schedule shown in Table XV-5.

2. An estimated average of 60 OCDs, averaging 30 pages each, are developed/revised each year.

3. An estimated yearly average of 10 APPs, averaging 20-pages each are prepared/revised.

4. An estimated average of 700 sheets of illustrating, and 180 engineering drawings averaging 5 sheets each are required yearly.

5. Estimated annual workload for other types of documentation are:

   a. Requests for Document Change - 100.

   b. Equipment Addition/Deletion Notices - 200.

   c. Modification Proposals - 15.

   d. Maintenance Repair Report Cards - 500.

6. The AUTEC Technical Library shall be staffed during normal Andros Island work hours, and open to patrons between the hours of 0900 to 1200, and 1300 to 1600.

7. Estimated annual workload for document and drawing reproduction equipment is:

a. Photocopying - 1,500,000 pages.

b. West Palm Beach Bruning - 50,000 sheets (size A through E).

c. Facilities (Andros) Xerox Type - 3,000 sheets (size A through E).

## E. KEY PERSONNEL/PERSONNEL QUALIFICATIONS

1. Key Personnel: None.

2. Personnel Qualifications:

a. AUTEC Technical Librarian To successfully execute the tasks and responsibilities described, the person assigned should as a minimum:

1. Have an Associate of Arts Degree in Library Assistantship.

2.. Have five years direct experience and progressive responsibility working in a technical library.

## F. APPLICABLE DOCUMENTS

| | |
|---|---|
| NAVAIR 00-25-100 Technical Manual; | Naval Air Systems Command Technical Manual Program |
| NUWCDETAUTECINST 8023.1 (Series); | NUWCDETAUTEC Policies for Ordnance Related Operating Control Directives Development and Coordination |
| OCD-(15.4)-01-XX; | Engineering Planning and Cost Estimating System |
| OCD-(15.4)-02-XX; | AUTEC Maintenance System |

| | |
|---|---|
| OCD-(15.4)-05-XX; | Preparation and Control of Operating Control Directives |
| OCD-(15.4)-06-XX; | Configuration Management of AUTEC Documentation |
| OCD-(15.4)-23-XX; | Technical Library Operations |

JA1-364
N61339-97-C-0001

OCD-(21.1)-15-XX; Electronic Equipment Control

American Library Association Rules for Filing Catalog Cards, Pauline A. Seely, Chairman and Editor, AMERICAN LIBRARY ASSOCIATION, Chicago

COMMONSENSE CATALOGING, A CATALOGER'S MANUAL, Rosalind E. Miller and Jane C Terwillegar, The H.W. Wilson Company, New York

CUTTER-SANBORN Three-Figure Author Table, (SWANSON-SWIFT REVISION), Richard A. Cutter, Libraries Unlimited Inc, Littleton, CO., 1976

IBM compatible software program: TECHNICAL PUBLICATIONS LIBRARY PROGRAM provided by the Naval Air Technical Services Facility (NATSF)

JOINT PROJECT PROCEDURES

| APP No. | Document Title |
|---|---|
| APP 1-92G | Customs and Immigration - AUTEC Personnel |
| APP 1-98G | Mail Services – AUTEC Project |
| APP 1-103G | Down Range Visitors Control |
| APP 2-2G | AUTEC Recreation Association |
| APP 2-46G | Housing Plan – Andros Island |
| APP 2-74G | AUTEC Recreation Association Marina |
| APP 2-107G | Recreational Diving and Swimming |
| APP 2-109G | Air Evacuations: Medical Emergencies and Deaths |
| APP 2-115G | Recreational Clubs and Social Groups |
| APP 4-11G | Access Control: AUTEC Project Personnel and Visitors or Personal Guests at NUWCDETAUTEC Facilities |
| APP 4-13G | Key and Lock Control Program |
| APP 4-15G | Control of Feral Animals and Domesticated Dogs and Cats - AUTEC Base |
| APP 4-18G | Security and Boarding Procedures for Aircraft Passengers and Baggage |
| APP 4-19G | Procedures for Utilization of Drug-Detecting Canines |
| APP 4-21G | Mass Casualty Plan |
| APP 6-25G | Sole Source Procurements Requested by Government Personnel |
| APP 7-8G | Gasoline, Fuel Oils and Lubricants: Consumption and Control |
| APP 7-9G | Government Vehicle Assignment, Dispatch and Control |
| APP 7-10G | Motor Vehicle Traffic Program |
| APP 7-11G | Use and Control of GSA and Navy-Owned Vehicles - AUTEC ProjectCONUS |
| APP 7-15G | Shipment of Personal Property |
| APP 7-16G | ARA Auto Staging Area |

Table XV-3

JOINT PROJECT PROCEDURES

| APP No. | Document Title |
|---|---|

JOINT PROJECT PROCEDURES

| APP No. | Document Title |
|---|---|
| APP 8-11G | Control and Use of the AUTEC Phone System |
| APP 8-14G | Fixed-Wing Passenger/Cargo Transportation |
| APP 8-24G | Admiralty Incident Reporting |
| APP 8-25G | AUTEC Waterfront Procedures and Regulations |
| APP 8-27G | Community Support Missions |
| APP 8-32G | Emergency Shipment of Handcarry Cargo on Sunday and Holiday Flights |
| APP 8-35G | Base Support Planning and Estimating Request |
| APP 8-36G | Self-Help Projects |
| APP 8-37G | Smoking Policy |
| APP 8-38G | AUTEC School - AUTEC Project |
| APP 8-39G | Solicitation and Commercial Activities |
| APP 8-41G | AUTEC Project Qualified Recycling Program |
| APP 8-43G | Additional Fixed-Wing Aircraft Flights for Official AUTEC Requirements |
| APP 8-44G | Lost, Abandoned or Unclaimed Privately Owned Personal Property |
| APP 8-45G | AUTEC Energy Management Program |
| APP 8-46G | Computer Systems Acquisition, Maintenance and Control |
| APP 9-5G | Inspections and Searches for Recovery of Property |
| APP 9-6G | Request for Test Equipment |
| APP 11-3G | Fire Protection Policy |
| APP 11-4G | Hurricane Plan, CONUS, AUTEC |

Table XV-3

| | |
|---|---|
| APP 11-5G | Hurricane Plan, Andros Ranges |
| APP 11-7G | AUTEC Occupational Safety and Health Policy Statement |
| APP 11-8G | Hazardous Materials Control and Management Program |
| APP 11-9G | Surface Preparation and Painting |

JOINT PROJECT PROCEDURES

| APP No. | Document Title |
|---|---|
| APP 11-10G | Lockout/Tagout Program |
| APP 11-12G | Policy for AUTEC Project Bloodbourne Pathogens (BBP) Program |
| APP 11-13G | Hazardous Waste Management Policy |
| APP 11-14G | Personal Protective Equipment and Matrix |
| APP 11-15G | AUTEC Toxic Paint Policy |
| APP 11-16G | Hearing Conservation |
| APP 11-17G | Chemical Laboratory Hygiene |
| APP 11-18G | Confined and Enclosed Space Safety |
| APP 11-20G | Occupational Respiratory Protection Program |
| APP 11-22G | Environmental Review |

Table XV-3 (cont.)

AUTEC
OPERATING CONTROL DIRECTIVES

| OCD Number* | TITLE |
|---|---|
| (01)-21-XX | REPORTING MAJOR SYSTEM/EQUIPMENT OUTAGES |
| (02.1)-01-XX | IN-WATER TRACKING SYSTEM GENERAL SETUP |
| (02.1)-02-XX | SONOBUOY TRACKING SYSTEM |
| (02.1)-03-XX | IN-WATER SYSTEM TAPE RECORDER OPERATION SETUP FOR SITES 1, 3, AND 4 |
| (02.1)-04-XX | DUAL ACOUSTICAL INTERFACE MEASUREMENT SYSTEMS (AIMS) |
| (02.1)-05-XX | AUTEC TRACKING RADARS |
| | - - - - - - *deleted* - - - - - - |
| (02.1)-07-XX | RADAR SYSTEM RADIATION CONTROL AND HIGH VOLTAGE HAZARDS |
| (02.1)-11-XX | AN/WQC-2A SONAR COMMUNICATION SET |
| (02.1)-13-XX | IN-WATER TRACKING SYSTEM F-1 AND F-DAY CHECKOUT PROCEDURES |
| (02.1)-22-XX | RANGE INSTRUMENTATION EQUIPMENT OPERATOR CERTIFICATION PROGRAM |
| (02.2)-05-XX | WEATHER STATION DATA DISPERSION |
| (02.2)-08-XX | DNM DATA ACQUISITION RACK OPERATING PROCEDURES |
| (02.2)-13-XX | STRIP CHART EIGHT-CHANNEL RECORDING SYSTEM |
| (02.2)-43-XX | SCIENTIFIC ATLANTA GDP 850 OPERATING PROCEDURES |
| (02.2)-45-XX | HP 9836/SCIENTIFIC ATLANTA GPD-850 REMOTE CONTROL SYSTEM |
| (02.2)-47-XX | DEPLOYABLE NOISE MEASUREMENT (DNM) ARRAY OPERATING PROCEDURES |
| (02.2)-48-XX | SHIPBOARD ELECTRONICS OPERATOR |
| (02.3)-05-XX | FORACS ACOUSTIC TARGET SYSTEM CONSOLE OPERATION |
| (02.3)-06-XX | FORACS ELECTRONIC SUPPORT MEASURES TEST SYSTEM CONSOLE OPERATION |
| (02.3)-08-XX | FORACS DATA PROCESSING GUIDE |
| (02.3)-10-XX | FORACS REQUIRED READING LIST |
| (02.3)-11-XX | DOCKSIDE DOPPLER/RANGE ACCURACY TEST SET OPERATION |
| (02.3)-12-XX | FORACS DATA RETENTION AND CONTROL |
| (02.3)-13-XX | FORACS ENGINEER CERTIFICATION PROGRAM |
| (02.3)-15-XX | DECK TRANSIT SETUP AND OPERATION |
| (02.3)-16-XX | AN/BRD-7 SHIP'S DATA RECORDER OPERATION |

AUTEC
OPERATING CONTROL DIRECTIVES

| OCD Number* | TITLE |
|---|---|
| | *- - - - - deleted- - - - -* |
| | *- - - - - -deleted- - - - -* |
| (02.3)-46-XX | FORACS ELECTRONIC SUPPORT MEASURES (ESM) RADAR TARGET OPERATIONS |
| (04.1)-02-XX | RANGE USER HELO AND RANGE USER BUILDING ONE (RUH/RUB1) |
| (04.1)-04-XX | OPERATIONS CONTROL CENTER COORDINATOR |
| (04.1)-05-XX | REAL-TIME LOG KEEPING |
| (04.1)-06-XX | ARGOS REAL TIME CONTROLLER TRAINING/QUALIFICATIONS PROGRAM |
| (04.1)-07-XX | TEST CONDUCTOR - WEAPONS RANGE |
| (04.1)-08-XX | IN-WATER CONTROL CONSOLE CHECKOUT AND OPERATION |
| (04.1)-10-XX | RADAR CONTROLLER'S CONSOLE OPERATION |
| (04.1)-14-XX | ENGINEERING DISCREPANCY REPORTS |
| (04.1)-16-XX | DAILY SITREP REPORTING SYSTEM |
| (04.1)-20-XX | RANGE RESOURCES UTILIZATION REPORTING |
| (04.1)-23-XX | LOST AND RECOVERED OBJECTS FILES |
| (04.1)-26-XX | EMERGENCY OPERATIONS REACTION PLAN |
| (04.1)-28-XX | DISCREPANCY REPORTING SYSTEM |
| (04.1)-41-XX | TEST PLANNING DOCUMENTATION AND STYLE GUIDE FOR WEAPONS RANGE TESTS |
| (04.1)-43-XX | AUTEC SCHEDULING SYSTEM CONTROLS AND PROCEDURES |
| (04.1)-52-XX | AUTEC AT SEA PERSONNEL AND EQUIPMENT TRANSFERS |
| (05)-01-XX | DATA CONTROLLER |
| (05)-04-XX | IDENTIFICATION OF DATA ITEMS |
| (05)-05-XX | RELEASE OF RANGE USER DATA PACKAGES |
| (05)-07-XX | COMPUTER SERVICES INSTRUCTIONS |
| (05)-14-XX | BOUNCE PINGER DATA PROCESSING |
| (05)-22-XX | ARGOS VIDEO TAPING SUBSYSTEM |
| (05)-24-XX | LIGHTWEIGHT TORPEDO FIRING REPORT PROCEDURE |
| (05)-25-XX | AUTEC RANGE DATA TRANSFERS |
| (05)-26-XX | NATO FORACS TEST REPORTING INTEGRATED PROGRAM POSTTEST PROCESSING |
| (06.1)-01-XX | POSTTEST SOFTWARE CERTIFICATION, CONTROL AND MODIFICATION |

Table XV-4 (cont.)

AUTEC
OPERATING CONTROL DIRECTIVES

| OCD Number* | TITLE |
|---|---|
| (06.1)-11-XX | SOFTWARE DEVELOPMENT PROCEDURES |
| (06.1)-13-XX | ARGOS CONTROL, MODIFICATION, AND CERTIFICATION |
| (06.1)-23-XX | DATA PROCESSING SOFTWARE BACKUP |
| (06.1)-35-XX | CONTROL OF SYSTEMS CONSTANTS IN AUTEC COMPUTERS |
| (06.3)-00-XX | AUTEC LOCAL AREA NETWORK (LAN) MAINTENANCE AND OPERATION |
| (07.1)-01-XX | SECURE VOICE RECORDING DURING TEST OPERATIONS |
| | *- - - - - deleted - - - - -* |
| (07.1)-03-XX | SECURE VOICE CIRCUIT |
| (07.1)-04-XX | OPERATION AND CONTROL OF CELLULAR STU-III STATIONS |
| (07.1)-06-XX | ASSIGNMENT/RECORDING OF NON-SECURE AUDIO CHANNELS DURING TEST OPERATIONS |
| (07.1)-08-XX | WSAT COMMUNICATION SYSTEM |
| (07.1)-13-XX | MICROWAVE SYSTEM ALIGNMENT |
| (07.1)-17-XX | VHF/UHF TRANSCEIVER FACILITY |
| (07.1)-18-XX | AUTEC OPERATIONAL INTERCOM SYSTEM |
| (07.1)-19-XX | ASD NAVAL COMMUNICATIONS CENTER OPERATIONS |
| (07.1)-21-XX | AUTEC ANTENNA INSTALLATION |
| (07.1)-22-XX | DRAFTING NAVAL MESSAGES |
| (07.1)-25-XX | MICROWAVE BACKUP COMMUNICATION |
| (07.1)-26-XX | ANDROS RADIO PAGING SYSTEM |
| (07.2)-03-XX | CENTRAL TIMING STATION SYNCHRONIZATION |
| (07.2)-04-XX | TIME CODE GENERATOR |
| (07.2)-05-XX | DATA GATHERING SYSTEM SYNCHRONIZER |
| (07.2)-07-XX | INTER-RANGE INSTRUMENTATION GROUP-B (IRIG B) TRANSMISSION SYSTEM |
| (07.2)-08-XX | SUBCENTRAL TIMING STATION SYNCHRONIZATION |
| (08)-21-XX | RANGE SUPPORT SERVICES GROUP MK-30 TARGETS AND BATTERY OPERATIONS CONFIGURATION/DOCUMENT CONTROL SYSTEM |
| (08)-24-XX | RANGE SUPPORT SHOP MK-30 LOGISTICS OPERATIONS |
| (08)-25-XX | STANDARD APPROVED GEOMETRIES AND GENERATING NEWMOBILE TARGET GEOMETRIES |
| (08)-26-XX | TARGET SCHEDULING |
| (08)-29-XX | TARGET SYSTEMS CONTROLLER RESPONSIBILITIES |

Table XV-4 (cont.)

AUTEC
OPERATING CONTROL DIRECTIVES

| OCD Number* | TITLE |
|---|---|
| (08)-45-XX | RANGE SUPPORT TARGET FACILITY TRAINING PROGRAM |
| (09.1)-00-XX | HAZARDS OF ELECTROMAGNETIC RADIATION TO ORDNANCE (HERO) EMISSIONS CONTROL BILL |
| (09.1)-02-XX | EXPLOSIVES HANDLING/TRANSPORTING TRAINING AND QUALIFICATION/CERTIFICATION PROGRAM |
| (09.1)-29-XX | GUIDE FOR AMMUNITION TRANSACTION REPORT |
| (09.1)-58-XX | EXPLOSIVES HANDLING, STORAGE, AND MAGAZINE INSPECTIONS |
| (09.1)-61-XX | TRANSPORTING/TRANSFERRING/RECEIVING EXPLOSIVES AT NUWCDETAUTEC ANDROS ISLAND |
| (09.1)-62-XX | MK-46, MK-48/MK-48 ADCAP POST-RUN OPERATIONS IN BUILDING 1684 TORPEDO POST-RUN FACILITY |
| (09.2)-00-XX | TARGET/TORPEDO RECOVERY BY RECOVERY BOATS |
| (09.2)-01-XX | MK-48 MODS 4/5/MK-24 (U.K.) AND MK-30 TARGET LAUNCH FROM THE RANGER |
| (09.2)-03-XX | LAUNCHING ADVANCED LIGHTWEIGHT TORPEDOES/MK-46 AND MK-50 WEAPONS FROM MK-32, MOD 17 TORPEDO TUBE ABOARD RANGER |
| (09.2)-11-XX | DIVER/HELICOPTER RECOVERY OF TORPEDOES/TARGETS |
| (09.2)-13-XX | MK-30 TELESCOPIC TARGET LAUNCHING |
| (09.2)-34-XX | HELICOPTER LAUNCH OF MK-30 TARGETS |
| (09.2)-51-XX | SWIMOUT AUTEC LAUNCHER |
| (09.2)-55-XX | MK-40 TELESCOPIC TARGET LAUNCHING |
| (09.2)-57-XX | HELICOPTER WEAPON RECOVERY SYSTEM MK-2 MOD 0/1 |
| (09.2)-58-XX | HELICOPTER RECOVERY OF MK-50 EXERCISE TORPEDOES |
| (12)-00-XX | MARINE ELECTRONICS EQUIPMENT READY ROOM |
| (12)-02-XX | WEAPONS SYSTEMS ACCURACY TRIAL (WSAT) DECK TRANSIT SYSTEM |
| (12)-03-XX | OPERATION OF SONOBUOY TRANSMITTER SRT-22-AT12900 |
| (12)-05-XX | MOBILE ACOUSTIC RESPONSE SYSTEM |

Table XV-4 (cont.)

AUTEC
OPERATING CONTROL DIRECTIVES

| OCD Number* | TITLE |
|---|---|
| (12)-07-XX | WEAPONS SYSTEM ACCURACY TRIAL (WSAT) TARGET ARRAY DEPLOYMENT |
| | - - - - - *deleted* - - - - - |
| (12)-09-XX | ES REQUIRED READING LIST |
| | - - - - - *deleted* - - - - - |

AUTEC
OPERATING CONTROL DIRECTIVES

| OCD Number* | TITLE |
|---|---|
| (12)-12-XX | ADVANCED SHIPBOARD TRACKING ELECTRONICS (ASTEP) CABLE TO 688 CLASS JUNCTION BOX |
| (12)-13-XX | ON-RANGE TEST VESSEL INITIAL ARRIVAL CHECKOUT PROCEDURE |
| (12)-16-XX | X-BAND TRANSPONDER UTILIZATION |
| (12)-17-XX | DEPLOYMENT AND OPERATION OF SONOBUOY SIMULATOR |
| (12)-19-XX | SHIPBOARD TRACKING ELECTRONICS PORTABLE (STEP) CERTIFICATION SHORT TURNAROUND |
| | *- - - - - deleted - - - - - -* |
| (12)-22-XX | SETUP AND OPERATION OF PORTABLE ARGOS |
| (12)-23-XX | MK-39 EXPENDABLE MOBILE ASW TRAINING TARGET (EMATT) |
| (12)-24-XX | INSTALLATION AND OPERATION OF SYNCHRONOUS TRACKING INTERFACE |
| (12)-25-XX | SONAR TRANSMITTER SYSTEM MK-72 MOD 0 CERTIFICATION |
| (12)-26-XX | SONAR ACOUSTIC TARGET SOURCE OPERATION |
| (12)-27-XX | ASSEMBLY, MAINTENANCE, AND REPAIR OF WEAPON ACOUSTIC TRACKING TRANSDUCER (WATT) ASSEMBLY |
| (12)-28-XX | INSTALLATION AND OPERATION OF WEAPON ACOUSTIC TRACKING TRANSDUCER (WATT) ASSEMBLY |
| (12)-29-XX | INSTALLATION AND OPERATION OF DEEP SUBMERGENCE ASSEMBLY |
| (12)-30-XX | ASSEMBLY, MAINTENANCE, AND REPAIR OF DEEP SUBMERGENCE ASSEMBLY |
| (12)-31-XX | ASSEMBLY AND OPERATION OF PORTABLE UNDERWATER TRACKING TRANSDUCER |
| (12)-32-XX | X-BAND TRANSPONDER INSTALLATION – SH3 HELO |
| (12)-33-XX | BOUNCE PINGER |

AUTEC
OPERATING CONTROL DIRECTIVES

| OCD Number* | TITLE |
|---|---|
| (12)-36-XX | STEP/UQN-1, UQN-1H, UQN-4 TRACKING INTERFACE |
| (12)-38-XX | SITE ONE RADAR BEACON DELAY CERTIFICATION |
| | - - - - - *deleted* - - - - - |
| (12)-40-XX | SHIPBOARD TRACKING ELECTRONICS/PORTABLE (STEP) CERTIFICATION PROCEDURES |
| (12)-42-XX | CERTIFICATION OF ELECTRONIC TEST SUPPORT PERSONNEL |
| (12)-43-XX | HYDROSTATIC TEST FACILITY OPERATION |
| (12)-44-XX | MANUAL DEPLOYMENT OF SONOBUOYS |
| (12)-45-XX | AUTEC ACOUSTICAL TRACKING EQUIPMENT FAILURE REPORTING AND ANALYSIS PROGRAM |
| (12)-46-XX | OPERATION OF TACTICAL AIR AND NAVIGATION (TACAN) REMOTE CONTROL AT OPERATIONS CONTROL CENTER (OCC) |
| (12)-47-XX | MAINTENANCE AND REPAIR OF SYNCHRONOUS TRACKING INTERFACE |
| (12)-50-XX | AUTEC MULTIPURPOSE TRACKING PINGER INSTALLATIONS |
| (12)-51-XX | ASTEP/BQN-17 TRACKING INTERFACE |
| (12)-52-XX | PUTT INSTALLATION USING KEYPORT FLOOD GRATING MOUNT |
| (12)-53-XX | ACOUSTIC TRACKING EQUIPMENT INSTALLATION AND OPERATION FOR WSAT |
| (12)-54-XX | IDENTIFYING AND SAFEGUARDING ELECTROSTATIC DISCHARGE (ESD) SENSITIVE ITEMS RECEIVED AT AUTEC |
| (12)-55-XX | ACOUSTIC TRACKING EQUIPMENT (ATE) SOLDER REPAIR INSPECTION REQUIREMENTS |
| (12)-56-XX | ACOUSTICAL TRACKING EQUIPMENT (ATE) MATERIAL REVIEW BOARD |
| (12)-58-XX | F42-C HYDROPHONE CALIBRATION CURVE DEVELOPMENT |
| (12)-59-XX | AUDIT AND INSPECTION AREAS CONTAINING AUTEC ACOUSTIC TRACKING EQUIPMENT (ATE) |

Table XV-4 (cont.)

AUTEC
OPERATING CONTROL DIRECTIVES

| OCD Number* | TITLE |
|---|---|
| (12)-60-XX | RAYTHEON VESSEL TRACKING TRANSDUCER SYSTEM ASSEMBLY AND CERTIFICATION |
| (12)-61-XX | ACOUSTIC TRACKING EQUIPMENT/QUALITY ASSURANCE (ATE/QA) REQUIRED READING LIST |
| (12)-62-XX | ACOUSTIC TRACKING EQUIPMENT/QUALITY ASSURANCE (ATE/QA) PERSONNEL CERTIFICATION |
| (12)-63-XX | ACOUSTIC TRACKING EQUIPMENT (ATE) MATERIAL CONDITION MARKING |
| (12)-64-XX | DIFFERENTIAL GLOBAL POSITIONING SYSTEM (GPS) TRACKING SYSTEMS |
| (12)-65-XX | ACOUSTIC TRACKING EQUIPMENT/QUALITY ASSURANCE (ATE/QA) TEST AND INSPECTION PLANS |
| (12)-66-XX | INCOMING INSPECTION OF ACOUSTIC TRACKING EQUIPMENT |
| (12)-67-XX | INSPECTION OF MODIFICATIONS MADE TO ACOUSTIC TRACKING EQUIPMENT (ATE) |
| (12)-68-XX | INSPECTION OF REPAIRS MADE TO ACOUSTIC TRACKING EQUIPMENT (ATE) |
| (12)-69-XX | ACOUSTIC TRACKING EQUIPMENT/QUALITY ASSURANCE (ATE/QA) SAMPLING INSPECTIONS |
| (12)-70-XX | REMOVAL OF GM TRANSDUCERS AND PLUG CLOSURES FROM SHIP'S FOUNDATION |
| (12)-71-XX | PARGOS INITIALIZATION, OPERATION, AND TROUBLESHOOTING |
| (12)-72-XX | X-BAND TRANSPONDER INSTALLATION LAMPS III |
| | *- - - - - deleted - - - - -* |
| (12)-77-XX | REPLACEMENT OF MARK 72 TRANSDUCER CABLE |
| (12)-78-XX | DEPLOYING SONAR ACOUSTIC TARGET SOURCE (SATS III) TRANSDUCERS, AN/WQM-6 TEST SET |
| (12)-84-XX | SCOTCHKOTE AND WRAP FOR UNDERWATER CABLE SPLICE |
| (12)-85-XX | MK-72 MOD 0 TRANSDUCER "C" FREQUENCY CABLE REPAIR |
| (12)-87-XX | SCOTCHKOTE AND WRAP REPAIR OF UNDERWATER OUTBOARD CABLES |
| (12)-89-XX | HYDROPHONE CALIBRATION AND CURVE DEVELOPMENT |

Table XV-4 (cont.)

AUTEC
OPERATING CONTROL DIRECTIVES

| OCD Number* | TITLE |
|---|---|
| (12)-92-XX | MK-72 ELECTRONICS TERMINAL CRIMPING |
| (12)-93-XX | INSTALLATION AND OPERATION OF MK-72 PINGER SEQUENCER |
| (12)-94-XX | MK-12 OCEANOGRAPHIC DATA ACQUISITION SYSTEM (EXPENDABLE BATHYTHERMOGRAPH SYSTEM) |
| (13.1)-01-XX | MANAGEMENT OF SHORE BASED WEIGHT HANDLING EQUIPMENT |
| (13.1)-02-XX | AUTEC NONDESTRUCTIVE INSPECTION PROGRAM |
| (13.1)-09-XX | STANDARDS AND CALIBRATION LABORATORY OPERATIONS |
| (13.1)-33-XX | UNDERWATER TELEPHONE VIA VHF/FM RADIO |
| (15.3)-00-XX | SOLDERING CERTIFICATION PROGRAM |
| (15.4)-01-XX | ENGINEERING PLANNING AND COST ESTIMATING SYSTEM |
| (15.4)-02-XX | AUTEC MAINTENANCE SYSTEM |
| (15.4)-05-XX | PREPARATION AND CONTROL OF OPERATING CONTROL DIRECTIVES |
| (15.4)-06-XX | CONFIGURATION MANAGEMENT OF AUTEC DOCUMENTATION |
| (15.4)-23-XX | TECHNICAL LIBRARY OPERATIONS |
| (16)-02-XX | OPERATIONS ACCEPTANCE TESTS |
| (16)-09-XX | CONTROL OF AUTEC RANGE CONSTANTS |
| (16)-50-XX | SCHEDULING AND SUPPORTING NATIONAL IMAGERY AND MAPPING AGENCY (NIMA) SURVEYS |
| (18)-00-XX | PERSONNEL TRANSFER AT SEA |
| (18)-01-XX | ASSISTANT HARBORMASTER |
| (18)-02-XX | OPERATION, CERTIFICATION, AND TRAINING REQUIREMENTS OF MARINE WEIGHT AND AMMUNITION HANDLING EQUIPMENT ABOARD AUTEC VESSELS |
| (18)-03-XX | VESSEL CAPTAIN |
| (18)-04-XX | PROCEDURE FOR THE LEASING OF A VESSEL |

Table XV-4 (cont.)

AUTEC
OPERATING CONTROL DIRECTIVES

| OCD Number* | TITLE |
|---|---|
| (18)-06-XX | STREAM AND RECOVERY OF TOWED ARRAYS FOR BRITISH CLASS SUBMARINES |
| (18)-07-XX | SHIPYARD REPAIR FINAL REPORT |
| (18)-09-XX | DAMAGE CONTROL AND SAFETY EQUIPMENT ONBOARD AUTEC VESSELS |
| (18)-12-XX | VHF BRIDGE-TO-BRIDGE RADIOS |
| (18)-15-XX | MARINE OPERATIONS LIMITATIONS |
| (18)-16-XX | HARBOR VESSEL CONTROL |
| (18)-18-XX | MAINTENANCE OF AIDS TO NAVIGATION |
| (18)-21-XX | DECK LOGS |
| (18)-25-XX | VESSEL MATE |
| (18)-26-XX | MARINE OPERATIONS TRAINING/CERTIFICATION PROGRAM |
| (18)-27-XX | AUTEC VESSEL PRESAIL REQUIREMENTS |
| (18)-49-XX | MARINE CRAFT QUARTERLY UPKEEP SCHEDULE |
| (18)-50-XX | OPERATIONS ACCEPTANCE TEST FOR NEW VESSELS |
| (18)-52-XX | MARINE VESSEL ENGINEERS |
| (18)-71-XX | DOCKSIDE FUELING |
| (18)-72-XX | MAINTENANCE AND OPERATION OF GOVERNMENT-FURNISHED OUTBOARD MOTORS, BOATS, AND RELATED EQUIPMENT |
| (19.2)-05-XX | ROTARY WING PASSENGER/CARGO TRANSPORTATION-ANDROS ISLAND |
| (20.1)-01-XX | GROUNDING SYSTEMS TESTING AND GROUNDING SYSTEMS FOR ORDNANCE STORAGE AND OPERATING FACILITIES |
| (20.4)-22-XX | PUBLIC WORKS ENGINEERING, CONSTRUCTION AND MAINTENANCE SCHEDULING |
| (21.1)-04-XX | CARGO HANDLING AND MOVEMENT |
| (21.1)-13-XX | AIR/MARINE CARGO SHIPMENT |
| (21.1)-15-XX | ELECTRONIC EQUIPMENT CONTROL |
| (21.1)-33-XX | WPB SUPPLY STOREROOM OPERATIONS |
| (22.1)-02-XX | ASBESTOS-CONTAINING BUILDING MATERIAL (ACBM) OPERATION AND MAINTENANCE PROGRAM |

Table XV-4 (cont.)

AUTEC
OPERATING CONTROL DIRECTIVES

| OCD Number* | TITLE |
|---|---|
| (22.1)-20-XX | MARIN<br>E CUTTING AND WELDING SAFETY PROCEDURES |
| (22.2)-03-XX | OIL SPILL PREVENTION AT SEA |
| (22.2)-04-XX | RANGE OPERATIONS ENVIRONMENTAL MITIGATION PROCEDURES |
| (24)-04-XX | EMERGENCY MEDICAL SERVICES |

*NOTE: XX implies latest revision number.

AUTEC REFERENCE/POLICY DOCUMENTS

| Document Name | Update Frequency* |
|---|---|
| AUTEC Range Manual | Biennially |
| AUTEC Operations Guide | Biennially |
| AUTEC Vessel Particulars | Annually |
| AUTEC Vessel Photo Album | As Required |
| AUTEC Capabilities Document | Annually |
| Range Users Aviators' Manual (Including Landmarks) | Annually |
| Hazardous Waste Management Plan for NUWCDETAUTEC Sites Andros Island Bahamas (Attachment 1 to APP 11-13G) | Annually |
| United Kingdom Range User Programs Hazardous Waste Management Plan (Appendix E to Attachment 1 to APP 11-13G) | Annually |
| Hazardous Waste Management Plan West Palm Beach (Appendix F to Attachment 1 to APP 11-13G) | Annually |
| (AUTEC) Hazard Communication (HAZCOM) Plan | Biennially |
| (AUTEC) Hazardous Materials Control and Management Program (APP 11-8G) | Annually |
| AUTEC Project HAZMART Program (Appendix A to APP 11-8G) | Annually |
| (AUTEC) Installation Spill Contingency Plan (ISPC) | Every 5 Years |
| AUTEC Dispensary Quality Improvement/Performance Improvement and Risk Management Program | Biennially |
| AUTEC Pollution Prevention (P2) Plan | Annually |
| Fire Protection Plan For NUWCDETAUTEC Sites Andros Island Bahamas (Attachment 1 to APP 11-3G) | Biennially |
| AUTEC Project Bloodborne Pathogens (BBP) Program (Attachment 1 to APP 11-12G) | Annually |
| (AUTEC) Final SARA Title III Compliance Report (West Palm Beach) | Annually |
| AUTEC Information Systems Management Overview | Annually |
| AUTEC Software Configuration Management Plan | As Required |
| AUTEC Quality Management Guide | As Required |

Table XV-5

AUTEC REFERENCE/POLICY DOCUMENTS

| Document Name | Update Frequency* |
|---|---|
| AUTEC Comprehensive Eco-System and Cultural Resources Management Plan | Annually |
| AUTEC Solid Waste Management Plan | |
| AUTEC Hazardous Waste Storage Area Closure Plan | Every 3 Years |
| AUTEC Potable Water Master Plan | As Required |
| (AUTEC) Underground Storage Tank (UST) Management Plan | Every 5 Years |
| AUTEC Wastewater Slug Prevention Plan | Every 5 Years |
| (AUTEC) Pest Management Plan | Every 5 Years |
| | As Required |

- - - - - *deleted* - - - - -

* The Contractor shall update documents when known changes are identified. The Contractor shall minimally review each document at the frequency shown. If such review indicates no changes are required, the Contractor shall so notify NUWC in writing. Otherwise, the document(s) shall be updated.

* As Required, shall be interpreted to include updates needed to reflect any equipment, configuration, or process changes.

# AUTEC REFERENCE/POLICY DOCUMENTS

| Document Name | Update Frequency* |
|---|---|
| **AUTEC Utilities Systems Manuals:** | |
| **Utilities:** | |
| ■ Air Conditioning | As Required* |
| ■ Backup Generators | As Required* |
| ■ Uninterruptable Power Supplies | As Required* |
| ■ Chem Laboratory Operation | As Required* |
| ■ Concrete Batch Plant | As Required* |
| ■ Petroleum Fuel, Oil, and Lubricants Storage and Distribution | As Required* |
| ■ Potable Water Distribution | As Required* |
| ■ Potable Water Treatment | As Required* |
| ■ Power Distribution | As Required* |
| ■ Site 1 Power Plant | As Required* |
| ■ Steam Boilers | As Required* |
| ■ Wastewater Collection | As Required* |
| ■ Wastewater Treatment | As Required* |
| **Transportation:** | |
| ■ Transportation Equipment Management Information Database | As Required* |
| **AUTEC Operating and Maintenance Instructions (OMIs):** | |
| ■ OMI 01-1; Synchronous Tracking and Ranging System | As Required* |
| ■ OMI 01-2; MK84 MOD 2 Towed Pinger Assembly | As Required* |
| ■ OMI 80-2; WATT Pressure Vessel | As Required* |
| ■ OMI 80-4; Raytheon Broadband Transducers | As Required* |
| ■ OMI 80-7; Synchronous Tracking Interface System | As Required* |
| ■ OMI 81-2; AUTEC Instrumentation Radar System (AIRS) | As Required* |
| ■ OMI 86-3; MK-72 Pinger Test Set Error Burst Simulator | As Required* |
| ■ OMI 86-4; Calibration of MK-72 Mod 0 Sonar Transmitter Test Set | As Required* |

Table XV-5 (cont'd)

AUTEC Operating and Maintenance Instructions (OMIs) cont'd:

| | | |
|---|---|---|
| ■ OMI 87-1; | Mobile Acoustic Response System | As Required* |
| ■ OMI 89-1; | MK-72 Pinger Sequencer | As Required* |
| ■ OMI 90-1; | Checkout and Alignment of the AUTEC Digital Microwave System | As Required* |
| | - - - - - *deleted* - - - - - | |
| ■ OMI 93-1; | RTR II Radar | As Required* |
| ■ OMI 96-1; | AUTEC Instrumentation Radar System (AIRS) Solid State Track Radar (SSTR) Check and Adjustment Manual for SSTR #2 | As Required* |

* As Required, shall be interpreted to include updates needed to reflect any equipment, configuration, or process changes.

# XVI. SYSTEMS ENGINEERING AND ANALYSIS

## A. GENERAL

To remain a viable RDT&E/FOT&E facility, AUTEC's data acquisition, special test, data processing, communications, ATE/ES, timing, and other technical test support instrumentation equipment and systems must be kept operational and, as necessary, adapted or modified, in order to: preclude obsolescence; improve performance and/or efficiency; and, support the testing of increasingly more complex and capable U.S. Navy undersea warfare systems.

The need to rigorously monitor the on-going performance of AUTEC's existing instrumentation, analyze and develop solutions to unique instrumentation problems or anomalies, and to define, procure, and integrate equipment/system modifications and improvements dictates the need for a Systems Engineering and Analysis function.

## B. DESCRIPTION

The Systems Engineering and Analysis function supports high-level, often multi-disciplined, engineering and analysis tasks that encompass all of AUTEC's technical test support equipment, instrumentation systems, and current/future test support capabilities.

Typical tasks include, but are not limited to: independent performance assessments of critical range instrumentation systems on a periodic basis; diagnosing and correcting difficult instrumentation system/equipment problems; developing work-around or quick-fix solutions to emergent instrumentation system/equipment problems and failures; performing test support capability and other such studies and developing recommendations for instrumentation system/equipment modification/improvement/etc.; preparing plans for integrating new/modified capabilities into the overall AUTEC complex; and developing/conducting Operational Acceptance Tests (OATs) on new instrumentation systems, equipments, etc.

Table XVI-1 provides a representative list of available test equipment. Actual inventory is as provided by NUWC.

## C. CONTRACTOR RESPONSIBILITIES

1. The Contractor shall support AUTEC's Systems Engineering and Analysis requirements in accordance with the AUTEC Range Schedule, published Operations Directives, Workload Factors given in paragraph D, Applicable Documents cited in paragraph F, and other requirements stated below. Special requirements may be tasked by NUWC Work Order or Letter of Direction.

2. The general approach to accomplishing AUTEC's Systems Engineering and Analysis needs is that such tasks be performed by the Contractor utilizing a small core of professional engineers. The staff should be sufficient to provide life cycle support /systems maintenance to existing systems as well as provide oversight to subcontracted projects. The staff should be cross utilized, to the maximum extent practicable, both within this specification chapter and other specification chapters. It is noted that the workload factors cited in section D of this chapter are estimates only and should not be construed as any type of minimum/maximum staffing level. Arrangements for procured services to support requirements related to this area shall be made by the Contractor on a case-by-case basis, considering cost effectiveness, schedule or other requirements as approved by NUWC.

3. The Contractor is encouraged to cross-utilize project personnel whose unique expertise/knowledge/talent in specific technical areas can be applied to supplement assigned personnel in the accomplishment of specific tasks.

4. The Contractor shall maintain AUTEC's instrumentation systems' performance baseline by supporting requirements for periodic calibration and tracking accuracy verification tests as described in Table XV1-2 or as may be requested by NUWC. The Contractor shall perform analysis of data, acquired during the aforementioned tests/measurements for the presence of anomalies and trends. Such analysis, conclusions, and the proposal of requisite problem solutions shall be done independently (functionally and administratively) from that tasked to maintain and operate AUTEC's range instrumentation.

5. The Contractor shall maintain up-to-date, AUTEC's classified and unclassified Range Constants Manuals, per OCD-(16)-09-XX. The Contractor shall maintain liaison with the National Imagery and Mapping Agency (NIMA) as required to establish/maintain accurate geodetic benchmarks for new/existing shore-based instrumentation systems, offshore structures, etc., and shall support NIMA as described in OCD-(16)-50-XX (see also Chapter XX(4) of this Specification).

6. The Contractor shall promptly investigate and develop solutions to problems with AUTEC's in-air, in-water, data processing, ATE/ES, timing, communications, and other technical test support instrumentation equipment and systems, which require specialized expertise, including:

a. Analysis of failure(s) of critical equipment or high failure rate systems.

b. Quick-fix or work-around procedures to maintain operational capability in the event of emergent system/equipment failure.

c. Reliability, maintainability, and/or other problems that degrade or impede stated, expected, or designed levels of performance.

7. The Contractor shall provide support for the on-going assessment of AUTEC's test support capabilities. This shall include the conduct of both near and long-term studies. As requested by NUWC, such studies shall include

cost/benefit/risk analysis of any relevant trade-offs or options as necessary to support the recommendations(s)/conclusion(s) developed, and provided by, the Contractor. Such studies may include, but are not limited to:

a. Assessing AUTEC's ability to support current/future Range User test requirements.

b. Defining modifications, new technical approaches, improvements, or other changes to AUTEC's test support instrumentation systems/equipment/core capabilities as required to support Range User needs, preclude or postpone obsolescence, and/or improve performance or efficiency.

c. Evaluate the impact of test support capability improvements proposed by others.

8. The Contractor shall provide for the design and related engineering support to accomplish modifications/improvements to AUTEC's instrumentation systems/equipments as may be requested by NUWC. Such requests may include occasional requirements to provide prototyping of electronic or mechanical assemblies.

9. The Contractor shall devise, develop, and support the conduct of Operational Acceptance Tests (OATs) for all new or modified test support instrumentation systems/equipments, as approved by NUWC, in accordance with the guidelines and requirements of OCD-(16)-02-XX.

10. The Contractor shall develop and/or control and coordinate the installation, integration, and check-out plans and schedules for all new or modified test-support instrumentation systems/equipment such that neither AUTEC's Schedule of Operations nor AUTEC’s post-test data analysis schedule requirements are impaired or impacted.

11. The Contractor shall maintain, check-out, calibrate, and operate all test equipment provided in accordance with the standards and procedures delineated in maintenance and operation manuals provided by the equipment manufacturers.

12. The Contractor shall provide an adequate staff of persons qualified to perform the following tasks:

a. Develop and maintain an inventory of Government-provided consumables, expendables, and repair/spare parts for all SE&A equipment in accordance with the policies provided in Chapter XXI(1) of this Specification.

b. Provide technical support to Purchasing for procurement of instrumentation systems, component hardware, or software including: specification writing; technical evaluation of proposals; cost review; quality review; technical qualification of sources; and preparation of inspection and acceptance procedures.

c. Arrange for procured services on a case-by-case basis considering cost effectiveness and mission critical requirements as approved by NUWC.

13. The Contractor shall develop, or assure that the manufacturer provides, and then shall subsequently maintain all technical documentation for new or modified test support instrumentation systems/equipment in accordance with AUTEC's Configuration Management and Configuration Control Systems requirements addressed in relevant OCDs. Such documentation shall include complete and accurate engineering drawings, technical (installation, operating, maintenance, etc.) manuals, maintenance procedures, parts lists, etc. Prepare/submit relevant Modification Proposals (Mod Props), Equipment Addition/Deletion Notices, Requests for Documentation Change, Document Change Notices, engineering cost estimates, etc.

14. The Contractor shall develop/maintain/deliver all required drawings, equipment manuals, studies, failure investigations/analysis, and other documents discussed above, and others as may be requested by NUWC, in a timely manner. Delivered documents shall be complete and accurate.

15. The Contractor shall provide knowledgeable personnel to attend meetings with Range Users, senior Government representatives, employees of other Contractors, etc., related to range instrumentation systems and equipment test support capabilities, modifications, new installations, etc. The Contractor shall be prepared to make technical and programmatic presentations as requested by NUWC.

16. The Contractor shall submit all NUWC-required technical and administrative reports, described in Chapter XXV of this Specification, as pertain to support for AUTEC's Systems Engineering and Analysis requirements.

## D. WORKLOAD FACTORS

1. The professional workload for the Systems Engineering and Analysis function is estimated to require approximately five work years per year of senior engineering or senior technical specialist support, encompassing mechanical, electrical, electronic, radar, RF and general communications, ocean, and computer systems engineering disciplines. It is estimated that three of these work years will be required for systems analysis-related functions.

2. **Travel:** It is estimated that each year ten trips, of 1 week each, to places such as NUWC Division Newport, RI, will be required.

## E. KEY PERSONNEL/PERSONNEL QUALIFICATIONS

1. Key Personnel: None.

2. Personnel Qualifications:

a. **General:** To successfully execute the professional responsibilities and tasks described, it is recommended personnel assigned should as a minimum:

1. Have a BS degree in mathematics, computer science, a physical science, or an engineering discipline, and ten years of direct engineering or systems analysis experience in one or more of the areas described below, and which includes preparation of technical documentation (e.g. specifications, drawings, technical reports, etc.).

or:

2. In lieu of a degree, have extensive specialty training, and 15 years of direct experience, progressive responsibility, and demonstrated ability in one or more of the areas described below.

3. Have excellent oral and written communications skills.

b. **Experience:** It is recommended personnel assigned should collectively have direct experience with, and excellent knowledge of:

1. Computer, computer peripheral, and computer interfacing hardware systems and applications.

2. RF, digital and analog microwave, precision timing and frequency control systems, satellite communications systems, encryption devices, and GPS.

3. Electrical power transmission and distribution systems.

4. Digitized video transmission and display systems.

5. Solid state digital and analog circuit design.

6. General radar theory, analog/digital radar circuit design, and tracking radar operation and control/feedback systems.

7. Hydroacoustics and the theory of propagation of sound in water. Hydrophone and transducer design, signal amplification and transmission. Deep-sea cabling and connectors.

8. Lightning protection and grounding systems.

9. Mechanical, pneumatic, and fluid equipment control systems.

10. CAD.

11. Design of metal structures: stress calculation; strength, and corrosion-resistance, and general properties of metals/materials; failure analysis and prediction; preservation of materials in a marine environment.

12. Statistics and probability theory, reliability, systems analysis, and failure prediction.

## F. APPLICABLE DOCUMENTS

| | |
|---|---|
| OCD-(16)-02-XX; | Operations Acceptance Tests |
| OCD-(16)-09-XX; | Control of AUTEC Range Constants |
| OCD-(16)-50-XX; | Scheduling and Supporting National Imagery and Mapping Agency (NIMA) Surveys |
| Other OCDs; | Relevant/Related OCDs as may be listed in Table XV-4 |
| APP 11-5G; | Hurricane Plan, Andros Ranges |

## SYSTEMS ENGINEERING TEST EQUIPMENT

| NOMENCLATURE | MFG | MODEL NO. | QTY. |
|---|---|---|---|
| ANALYZER SPECTRUM | HP | 8590B | 1 |
| ANALYZER NETWORK | HP | 8410B | 1 |
| ANALYZER DYNAMIC SIGNAL | HP | 35670A | 1 |
| ANALYZER LOGIC | TEK | 1240 | 1 |
| CAMERA | SONY | HVM-352 | 1 |
| COMPASS FLUXGATE MOUNTED | KVH IND | AUTOCOMP 1000 | 1 |
| COMPASS FLUXGATE MOUNTED | KVH IND | AUTOCOMP 1000 | 1 |
| CONDITIONER POWER | SOLA | MCR250 | 1 |
| CONVERTER FREQUENCY | HP | 8411A | 1 |
| COUNTER FREQUENCY | HP | 5326B | 3 |
| COUNTER FREQUENCY | HP | 5328B | 1 |
| DISPLAY MAGNITUDE PHASE | HP | 8412A | 1 |
| DRIVER VIDEO | MIL-LEK | ML928-10 | 1 |
| DRIVER VIDEO | MIL-LEK | ML928-10 | 1 |
| ENCLOSURE ACCESS ONE | UB NETW | ASE7000-09 | 1 |
| EQUALIZER/AMPLIFIER | MIL-LEK | ML928EQ/A | 2 |
| KIT TOOL FBR OPT/UV LAMP | EL-LITE | SL-100 | 1 |
| MACHINE COPIER | XEROX | 5028 | 2 |
| MACHINE DRAFTING V TRACK | VEMCO | VEMCO 630 | 1 |
| METER PHASE GAIN | HP | 3575A | 1 |
| METER POWER OPTICAL | ANRITSU | ML96B | 2 |

Table XVI-1

| | | | |
|---|---|---|---|
| METER DIGITAL | JF | 8000A | 1 |

Table XVI-1

## SYSTEMS ENGINEERING TEST EQUIPMENT

| NOMENCLATURE | MFG | MODEL NO. | QTY. |
|---|---|---|---|
| MIXER AUDIO INPUT | PANASON | WR-450 | 1 |
| MIXER AUDIO INPUT | PANASON | WR-450 | 2 |
| MONITOR/REC VIDEO CLR 14 | SHARP | 14KV455 | 1 |
| MULTIMETER FIBEROPTIC | MATH AS | S-1800 | 1 |
| OSCILLOSCOPE 100 MHZ | KIKUSUI | COS6100M | 1 |
| OSCILLOSCOPE STORAGE | TEK | 466 | 1 |
| OSCILLOSCOPE STORAGE | LECROY | 9400 | 1 |
| OSCILLOSCOPE PORTABLE DI | LECROY | LS140 | 1 |
| OSCILLOSCOPE LCD | CREATEC | SC01 | 1 |
| OSCILLOSCOPE | TEK | 475 | 1 |
| OSCILLOSCOPE 465M | TEK | AN/USM-425(V) | 1 |
| OSCILLOSCOPE 100 MHZ | KIKUSUI | COS6100M | 1 |
| POWER SUPPLY BUFFER | ITT | 200300 | 1 |
| POWER SUPPLY AC | HP | 85901A | 1 |
| POWER SUPPLY | KEPCO | ABC7-5-2 | 1 |
| TRANSFORMER VOLTAGE | SOLA | CVS | 1 |
| TYPEWRITER SELEC II | IBM | 875 | 1 |

Table XVI-1 (cont.)

INSTRUMENTATION SYSTEMS PERFORMANCE TESTS

| TITLE/REFERENCE WORK ORDER # | FREQUENCY | PURPOSE OR DESCRIPTION | REPORTING |
|---|---|---|---|
| Range Recertification Test/935Y143 | As required (after each RMI or Range Stand-down) | Recertification of tracking instrumentation prior to resumption of test activities | E-mail summary evaluation within one day of test completion |
| Target of Opportunity Test/935Y137 | Bi-monthly (six times a year) | Verification of in-air and in-water track accuracy; abbreviated test with limited geometry | E-mail summary evaluation within one day of test completion |
| In-Air/In-Water Tracking Test/935Y138 | Semi-annually (twice a year); data collection concurrent with 935Y143 | Detailed evaluation of in-air and in-water tracking systems on a surface vessel; geometry encompasses the entire in-water track area | Quick-look e-mail summary evaluation within three days of test completion; formal report within 30 days thereafter. |
| Aircraft Tracking Test/935Y139 | Semi-annually (twice a year) | Evaluation of in-air tracking systems on an airborne platform | Quick-look e-mail summary evaluation within three days of test completion; formal report within 30 days thereafter |

Table XV1-2

INSTRUMENTATION SYSTEMS PERFORMANCE TESTS

| TITLE/REFERENCE WORK ORDER # | FREQUENCY | PURPOSE OR DESCRIPTION | REPORTING |
|---|---|---|---|
| Radar Performance Analysis/935Y140 | Monthly | Analysis of radar calibration parameters and other noted characteristics | Formal summary report within 30 days of the end of each calendar month |
| Radar Beacon Certification Test/935Y141 | Monthly test of one-third of the beacon inventory | Certification of the radar beacon inventory every quarter | Operations Control update; also included in the 935Y140 report |
| Hydrophone Transfer Function Test/935Y144 | As required; highly automated data collection | Verification of response/performance of in-water tracking hydrophones | As required |
| Special In-Water and In-Air Calibration Tests/935Y142 | As required | System evaluation tests as needed to satisfy special requirements, investigate and resolve anomalies etc. | As required |

Table XV1-2 (CONT.)

*- - - - deleted - - - - -*

Table XV1-2 (CONT.)

# XVII. QUALITY MANAGEMENT

## A. GENERAL

Team AUTEC has adopted a concept of cooperative process management and improvement, involving M&O Contractor and Government partners at all levels. Quality Management (QM) supports this concept, based on principles of Total Quality Leadership (TQL), Six Sigma, and other industry recognized methodologies for management, control, measurement and improvement.

## B. DESCRIPTION

Process management and improvement at AUTEC begins at the highest levels with the establishment of goals and strategic objectives by AUTEC's Senior Partners (i.e. the Contractor's Project Manager, and NUWC's Code 70 Department Head), implemented through the Operations Management Board (OMB). The OMB is comprised of the AUTEC Officer in Charge (OIC) and Team Leaders from each of the three designated AUTEC Business Areas (Test Operations, Base Operations, and Business/Customer Operations) (see also Chapter I of this Specification). All processes at AUTEC are assigned to one of these Business Areas, which operate as Process Management Teams (PMTs). For each process, the Process Owners develop performance plans and performance metrics. Based on the results of these metrics and other information gathered, areas for improvement are identified. Integrated Process Teams may be chartered for the purpose of achieving improvement.

The Department of the Navy's NUWC Division Newport implements QM at AUTEC under the guidelines of the Process Quality Management and Improvement (PQMI) methodology endorsed. QM incorporates the principles and practices of Total Quality Leadership (TQL), Quality Assurance (QA), Quality Control (QC), Six Sigma, and other quality improvement methodologies. The Navy's TQL Program is derived from W. Edwards Deming's quality management approach, comprised of systems theory, statistical analysis of variation, psychology, and knowledge-based planning and decision-making. The purpose of TQL is to satisfy the customer by improving products and services through focusing on processes and defect prevention as opposed to inspection for end product defects. The Six Sigma methodology examines processes in order to identify and eliminate waste, redundancy, and inefficiency. The purpose of Six Sigma is to satisfy the customer by identifying areas for improvement and adding value. Philosophy, techniques and tools of these two programs are aligned at AUTEC to accomplish the highest level of customer satisfaction, while achieving maximum cost effectiveness.

Process Management Teams (PMTs) are comprised of Contractor and Government employee counterparts from all process functional areas or chapters of this Specification. PMTs may establish Integrated Process Teams (IPTs) to address specific areas of concern or

opportunities for improvement. IPTs are also comprised of Contractor and Government counterparts who perform specific tasks within a process. Quality and customer satisfaction is the focus of every process, work procedure, and product line.

The Contractor is expected to initiate/participate in programs to optimize the quality of AUTEC's products and services. This involves defining processes, identifying appropriate personnel to apply process improvement techniques, determining measurable standards within the processes, identifying or suggesting improvements, and testing and implementing the improvements. PQMI is not considered an exclusive way to conduct business; the Contractor may supplement PQMI methods with other management programs and problem-solving techniques.

To ensure that all participants are knowledgeable in the methodologies and tools necessary to fulfill these requirements, training, facilitation, and guidance must be provided for the OMB, PMTs, Process Owners, Functional Area Specialists, chartered improvement Teams, and the general AUTEC population.

## C. CONTRACTOR RESPONSIBILITIES

1. The Contractor shall support AUTEC's Quality Management and Improvement program in accordance with the provisions of the Applicable Documents cited in paragraph F and other requirements stated below. Special requirements may be tasked by NUWC Work Order or Letter of Direction. Requirements apply to all support functions/areas specified in this Contract and to all segments of the Contractor's organization.

2. The Contractor shall combine QA and QC with TQL and Six Sigma tools and techniques, to ensure establishment of procedures for verifying that products and services remain in full compliance with all AUTEC standards, contractual requirements and NAVSEA TO300-AM-ORD-010.

3. Contractor participation:

   a. The Contractor's Project Manager shall assign a Senior Manager Team Leader as partner to an assigned Government Team Leader for each of the three Government Business Area Enterprise Teams (Process Management Teams) (see also Chapter I of this Specification). These Team Leaders will be members of, and, with the OIC, shall comprise AUTEC's Operations Management Board (OMB). OMB meetings are anticipated to occur weekly, or as required by membership and/or the Senior Partners. The OMB conducts strategic planning, identifies customer requirements, identifies significant

processes, and provides the leadership for Quality Management and Improvement at AUTEC.

b. The Contractor shall provide appropriate, qualified Process Owners for membership on Process Management Teams (PMTs). Each PMT will be comprised of designated Government personnel, plus those Process Owners from within the Contractor's organization, who may jointly share responsibility for a significant process associated with a specific functional area or chapter of this Specification. For all processes within their Business Area, each PMT will define areas of concern, develop Performance Plans, define specific processes, develop measures of merit, and evaluate process improvements. Each PMT may charter Integrated Process Teams (IPTs) to assist in data collection, analysis, or improving individual portions of a complex process.

c. The Contractor shall provide appropriate, qualified personnel to participate, together with designated Government personnel, on IPTs as established by the PMTs. Each IPT will meet as required to satisfy the deadline established by the PMT. Each IPT will typically be a temporary group which will focus on a specific issue, and which will be comprised of workers involved in the process. Typically, an IPT will be chartered to develop quality measures based on customer desires, collect data, remove problems as authorized, recommend improvements to the IPT, and document analysis and actions.

4. The Contractor shall provide on-going Process Management and Improvement training, based upon U.S. Navy course materials and material from other sources which support Quality Management principles and methods, for Contractor and Government personnel assigned to AUTEC. All persons participating on Integrated Process Teams shall, as a minimum, be trained in Process Management and Improvement at AUTEC, Team Skills and Concepts, and Communication Skills and Decision-Making. Advanced Process Improvement and Project Management training shall be provided as deemed appropriate, and/or as requested by Team members or PMT Leaders. The Contractor shall maintain a record of all such training received by each individual.

5. The Contractor shall provide a Senior Quality Management Specialist to administer and coordinate all QM program support requirements and functions. The Senior Quality Management Specialist shall be responsible for required training, documentation, technical support, and maintenance of records and other QM program-related documentation and materials. The Senior Quality Management Specialist will

assist the Process Owners in developing Performance Plans. This individual shall additionally attend OMB meetings, and provide guidance/assistance to the various TQL committees, boards, and teams as may be necessary to facilitate execution of required tasks and proceedings.

6. The Contractor shall provide a Senior Quality Analyst to assist in all QM program support requirements and functions. The Senior Quality Analyst shall perform facilitator duties and provide training for Process Owners, Functional Area Coordinators (see also Attachment 7 to Section J of this Contract), and IPTs. This individual will additionally assist the Functional Area Coordinators in developing and preparing Performance Metrics. The Senior Quality Analyst shall be empowered, by the Contractor's Project Manager, to operate unobstructed in all organizational elements, or functional areas, and to obtain assistance and information from those elements.

7. The Contractor shall provide support for the collection, review, and analysis of relevant data for performance measurement and subsequent development and reporting of quality trends.

8. The Contractor will provide support to assure conformance to other Quality Assurance programs required by outside agencies. The Contractor shall appoint personnel to independently audit the MK-30 Target and Acoustic Tracking Equipment programs (see Chapters VIII and XII of this Specification, respectively) in accordance with the requirements of NAVSEA TO300-AM-ORD-010.

9. The Contractor shall assist with the preparation, conduct, and analysis of internal and external customer surveys as may be required to support AUTEC's Process Management and Improvement program.

10. The Contractor shall, on a continuing basis, promote Process Improvement awareness throughout the AUTEC project, and shall maintain an employee suggestion program to encourage submission of ideas that lead to cost savings or other benefits.

11. The Contractor shall prepare, for submission, any applications or nominations for various U.S. Navy quality achievement awards as may be requested by NUWC.

12. The Contractor shall submit all NUWC-required technical and administrative reports, described in Chapter XXV of this Specification, as pertain to support for AUTEC's Process Management and Improvement program.

## D. WORKLOAD FACTORS

As derived from paragraph C.

## E. KEY PERSONNEL/PERSONNEL QUALIFICATIONS

1. Key Personnel: None.

2. Personnel Qualifications:

a. Senior Quality Management Specialist To successfully execute the tasks and responsibilities described, the person assigned should as a minimum:

1. Have a BS Degree or 10 years equivalent experience in the quality management field.

2. Have 10 years experience and increasing responsibility in the field of quality control and reliability.

3. Have 5 years experience in the training and implementation of TQM/TQL programs, practices, and techniques.

4. Have excellent written and verbal communications skills.

b. Senior Quality Analyst To successfully execute the tasks and responsibilities described, the person assigned should as a minimum:

1. Have a BS Degree or 10 years equivalent experience in mathematics, an engineering discipline, statistics, or other related field.

2. Have 5 years experience and increasing responsibility in the field of quality control, reliability, and statistical analysis.

3. Have 5 years experience in facilitation and training involving the theories, tools, and techniques of TQM/TQL.

4. Have excellent written and verbal communication skills.

JA1-395
N61339-97-C-0001
P00085

## F. APPLICABLE DOCUMENTS

| | |
|---|---|
| NAVSEA TO300-AM-ORD-010; | Quality Systems Requirements and Methods for Navy Weapons and Combat Systems |

U.S. Navy TQL Documents:

| | |
|---|---|
| Process Management and Improvement<br>A Manager's Desktop Guide | Office of Quality Advocate<br>(Code 01Q) December 1998 |
| A Total Quality Leadership<br>Process Improvement Model | TQLO Publication No. 93-02 |
| Total Quality Leadership:<br>A Primer | TQLO Publication No. 97-02 |
| Handbook for Basic Process Improvement | TQLO Publication No. 96-01 |

AUTEC Quality Management Guide

- - - - - - *deleted* - - - - - -

| | |
|---|---|
| Other OCDs; | Relevant/Related OCDs as may be listed in Table XV-4 |

# XVIII. MARINE SUPPORT

## A. GENERAL

Marine operations encompasses the maintenance, repair, alteration, overhaul, and daily operation of AUTEC's various small boats, craft, and ocean-going vessels and ancillary deck equipment, as well as AUTEC's private aids to navigation and off-shore structures. AUTEC's vessels are utilized to support on-range and off-range test programs, transport material between the various Andros Island sites and occasionally between ASD and CONUS, and to support range facilities maintenance projects.

## B. DESCRIPTION

A current list of AUTEC's larger vessels is provided in Table XVIII-1, together with a description of their significant characteristics. Further description is provided in AUTEC document "AUTEC Vessel Particulars." In addition, small outboard powered-boats are located at the various downrange sites for local use and at Site 1 for use during diving operations and as spill-control vessels, etc. The actual number of these and small boats may vary.

With the exception of various small boats, all of AUTEC's vessels are stationed at Site 1. Facilities at Site 1 include a breakwater-sheltered harbor, piers, a refueling station, a Harbor Master's office, and the following shop facilities located adjacent to the piers.

1. Marine Electrician Shop for limited fabrication of cable assemblies and wiring panels, repair of electrical control systems, overhaul of small electric motors and generators, etc.

2. Boatswain Shop for accomplishment of light wire-rigging work, fabrication/splicing of mooring lines, chain work, and related activities.

3. Pier Shop for piping and miscellaneous mechanical work including overhaul/repair of various engine accessories such as pumps, pneumatic/hydraulic control systems, etc.

Tables XVIII-2 and XVIII-3 provide representative lists of marine operations ancillary deck equipment and maintenance equipment, respectively. Actual inventories are as provided by NUWC.

AUTEC's vessels are mostly employed, within the local Op Areas adjacent to Andros Island: to launch and retrieve exercise torpedoes, mobile targets, and other similar test vehicles; to act as electronics support platforms and to provide

other target services; to transfer personnel to and from Range User vessels; to transfer cargo between the various Andros Island sites; and to support offshore facilities maintenance. Larger, sea-going vessels, such as the M/V RANGE ROVER and the M/V RANGER, are additionally employed to support open-ocean acoustic, environmental, geophysical, oceanographic, and other RDT&E programs. Vessels assigned to support various test programs may have to be temporarily or permanently modified in order to satisfy Ranger User or internal NUWC requirements.

Routine minor repair and maintenance of all Andros-based vessels, and all maintenance of small boats is conducted at the Site 1 facilities. Major vessel repairs and routine overhauls of all larger vessels are conducted at CONUS shipyards. In addition to AUTEC's small boats and larger vessels, various private aids to navigation marking the channels to AUTEC's various sites, off-shore instrumentation platforms, and hurricane moorings must also be maintained.

## C. CONTRACTOR RESPONSIBILITIES

1. The Contractor shall maintain all of AUTEC's vessels in an operational status except during scheduled maintenance periods authorized by NUWC. AUTEC's two high speed range support vessels (HAMMERHEAD ONE and HAMMERHEAD TWO) will not normally be required to be in-service simultaneously. Typically, one vessel is to be maintained in-service, while the other is to be maintained ashore at Site 1, to be reactivated when the in-service vessel requires repair/maintenance, or when required for test operations support. Ancillary deck equipment, when not needed for test operations support, shall be properly preserved from the elements and maintained in a ready-for-use condition. The Contractor shall man and operate AUTEC's vessels in accordance with the AUTEC Schedule of Operations, published Operations Directives, Workload Factors given in paragraph D, Applicable Documents cited in paragraph F, and other requirements stated below. Special requirements may be tasked by NUWC Work Order or Letter of Direction.

2. The Contractor shall provide a Port Captain, responsible for the overall safe operation and efficient utilization of all of AUTEC's vessels (e.g. boats, range craft, and ocean-going). This person, in coordination with individual vessel captains, and assisted by other support personnel, shall be qualified to perform/oversee the following tasks:

a. Assignment of vessels to meet scheduled and emergent test and logistic support requirements; matching crew/vessel capabilities to event needs.

b. On-range and open ocean test, and logistic support planning; ensuring crew and vessel readiness to fully support/meet documented requirements and schedules.

c. Voyage/transit planning; ensuring crew and vessel readiness to meet requirements and schedules; arranging for logistic and other requisite support at the port of destination and port-of-call enroute.

d. Hurricane/heavy weather protection planning.

e. Crew assignments. Nominations of prospective vessel captains.

f. Maintenance and inspection of required navigation, safety, damage control, and emergency use equipment onboard all of AUTEC's vessels.

g. Training of vessel captains and crew members; scheduling of at-sea drills; personnel certifications; etc.; as required by the Applicable Documents cited in paragraph F.

h. Ensuring that proper and accepted navigational practices are observed/followed underway, and that requisite navigational charts, publications, instruments, etc., are on-board and up-to-date.

i. Ensuring the practice of good seamanship.

j. Ensuring the overall cleanliness and appearance of AUTEC's vessels.

k. Providing professional assistance to Test Planning and Scheduling (see Chapter IV(1) of this Specification).

l. Providing NUWC Work Order support.

m. Providing professional interface with NUWC/other activities.

3. The Contractor shall maintain, check-out, calibrate, and operate AUTEC's vessels and all on-board machinery, systems,

equipment, and devices in accordance with the standards and practices established by the Applicable Documents cited in paragraph F and/or as delineated in maintenance and operation manuals provided by equipment manufacturers. Vessel operators shall, at all times, observe the practices of good seamanship and abide by accepted Rules of the Road for the waters in which they are operating.

4. The general approach to corrective maintenance of AUTEC's vessels, small boats, on-board systems, equipment, and devices as well as AUTEC's private aids to navigation, etc., shall be to restore operational capability as soon as possible, either by repair or replacement of affected items, and that such tasks shall normally be performed by the Contractor. The Contractor shall arrange for manufacturer or other procured support for specific tasks on a case-by-case basis considering cost effectiveness and other factors as approved by NUWC.

5. The Contractor shall exert his best efforts to maintain the appearance and cleanliness of all of AUTEC's vessels. When not in use, equipment and deck gear shall be properly stowed and secured. Navigation charts, pilotage instructions, and other similar documents on board all vessels shall be maintained up-to-date.

6. The Contractor shall maintain navigation, safety, damage control, and emergency use equipment onboard all AUTEC vessels and small boats in a satisfactory condition of readiness at all times. The Contractor shall arrange for periodic inspection/certification of such equipment by competent authority, as may be required by NSTM, ABS, or U.S. Coast Guard rules or regulations. The nature and amount of such equipment shall be as prescribed by NSTM, ABS, or U.S. Coast Guard rules or regulations applicable to the specific vessel considering size (admeasured tonnage or length, as applicable), capacity (personnel on board), and use. Vessel material condition inspections will be performed periodically by NUWC. Such inspections will include, but not be limited to: hull; machinery; electrical; damage control; safety; cleanliness; and preservation. The Contractor shall take immediate steps to correct any deficiencies discovered, and report the status of any outstanding deficiencies to NUWC on a weekly basis.

7. The Contractor shall be responsible for taking all precautions to prevent overboard fuel/oil spills or discharges and for cleaning up any spills which do occur, in accordance with AUTEC’s Installation Spill Contingency Plan (ISCP). The

Contractor shall ensure that vessel personnel are well trained in oil-boom deployment and procedures for containment and clean-up of any overboard fuel/oil spills. See also Chapter XXII(2) of this Specification.

8. The Contractor shall be responsible for adherence to restrictions on shipboard trash, garbage, and sewage discharge as may be prescribed by local laws, rules, or regulations or by treaty agreement (e.g. MARPOL V or subsequent) and by U.S. Navy rules or regulations as described in OPNAVINST 5090.1 (Series), as applicable to the area of operation.

9. The Contractor shall, if required by circumstance, support Emergency and Rescue Operations in accordance with OCD-(04.1)-26-XX.

10. One AUTEC vessel, the M/V RANGE ROVER, is especially suited for tasks requiring precision station-keeping. This vessel is also used for projects such as cable laying, ROV operations, servicing the Ocean Haul Down Facility, deep water instrumentation deployment and retrieval, etc. Both the M/V RANGER and the M/V RANGE ROVER are equipped as research vessels, capable of implanting temporary, nonrecoverable, deep-water moorings. These mooring deployments are performed on an occasional basis, employ minimal chain (one shot or less) and an "anchor last" installation method. These vessels are also capable of towing or deploying experimental research devices and electrical/electronic equipment, and performing other open ocean operations in support of acoustic, environmental, geophysical, and oceanographic research programs. The Contractor shall provide experienced crews for these vessels who are qualified to perform the operations described and who are skilled in the use of related rigging hardware and rigging methods and practices. The Contractor shall additionally provide on-site engineering support to oversee dockside mobilizations for such projects. Dockside mobilizations may take place at either Site 1 on Andros Island or at a CONUS location.

11. One vessel, the RANGEMASTER, is especially suited to tasks relating to MK-30 Target launch and exercise weapon, mobile target, and other test vehicle end-of-run recovery. Both M/V RANGER and M/V RANGE ROVER can be fitted with a Ramp Recovery System to perform these same recovery operations (with the advantage of being able to do so during periods of rough

weather) as required to supplement or substitute for the RANGEMASTER. The RANGEMASTER is equipped with a Telescoping Target Launcher (TTL); the M/V RANGER is equipped with a modified MK-59 Submarine Torpedo Tube and a MK-32 Mod 18 Above Water Torpedo Tube (AWTT). The Contractor shall support both launch and recovery operations, as may be scheduled, in accordance with requirements described in Chapter IX of this Specification.

12. The LCM(8)-6775 is especially suited for transporting supplies, materials, vehicles, water, etc., between Site 1 and AUTEC's downrange sites (see also Chapter XXI(1) of this Specification) and other similar tasks. During upkeep/overhaul periods, or when the LCM(8)-6775 is otherwise unavailable, the Contractor shall arrange for alternate services, as approved by NUWC, to assure uninterrupted support.

- - - - - *deleted* - - - - -

13. AUTEC's two high speed range support vessels (HAMMERHEAD ONE and HAMMERHEAD TWO) are especially suited to perform rendezvous operations involving the transfer of personnel and material between shore and ships underway. They are occasionally utilized to perform other test support functions including such operations as PTS range surveys and pre-test tracking performance verifications as described in Chapter III(3) of this Specification.

One vessel shall be kept in service at all times. The other vessel shall be kept ashore at Site 1 on Andros Island for maintenance/storage. The Contractor shall be responsible for switching vessels between service and storage on a periodic basis in consonance with vessel maintenance and test support schedule requirements.

The Contractor shall be tasked by Work Order or Letter of Direction a minimum of 30 days in advance of any requirement, previously mentioned, to man and operate both of these vessels simultaneously. The Government shall not request such simultaneous services with less advance notice.

14. The Contractor may, on occasion, be required to backhaul exercise weapons and/or other cargo or material from Andros Island to CONUS, or to transport cargo or material from CONUS to Andros Island. The Contractor may be required to transport hazardous or dangerous materials or items, or sample quantities of hazardous waste. All such materials/items shall be properly identified, documented, and manifested as required by applicable portions of the U.S. Code of Federal Regulations (see Chapter XXII(2) of this Specification). Bulk quantities of hazardous waste will only be shipped via MSC barge or other legal means. (see also Chapter XXI(1) of this Specification).

15. The Contractor shall enter and depart CONUS through a "Port-of-Entry" in accordance with U.S. Customs and Immigration regulations. The Contractor shall similarly comply with all Commonwealth of the Bahamas Customs and Immigration regulations.

16. Each of AUTEC's vessels, except for HAMMERHEAD ONE, HAMMERHEAD TWO, and LCM(8)-6775, are to have their own trim and stability booklet aboard. Both the captain (master) and mate of each vessel must be familiar with this document and must be able to perform requisite calculations and perform necessary corrections to ensure safe vessel trim and stability under a variety of conditions. All

vessels, including those listed above, involved in special projects which require significant or unusual loads will have their trim and stability calculated and verified safe by the Contractor's Marine Engineering personnel prior to commencing operations.

17. The Contractor shall provide Captains, and Chief Engineers for the M/V RANGER, M/V RANGE ROVER, and the RANGEMASTER who are licensed by the U.S. Coast Guard to operate vessels of such size (admeasured tonnage), class, and horsepower as described in paragraph E. Persons assigned as Mates shall also be appropriately licensed by the U.S. Coast Guard.

The Contractor shall provide Captains for the LCM(8)-6775, HAMMERHEAD ONE, and HAMMERHEAD TWO who are licensed by the U.S. Coast Guard to operate vessels of such size (admeasured tonnage), class, and horsepower as described in paragraph E.

18. The Contractor shall provide a training and certification program, and periodically conduct supervised at-sea drills, in accordance with the requirements of OCD-(18)-26-XX, to ensure that vessel captains and assigned crew members are qualified to perform their assigned tasks. The Contractor shall maintain a record of such training and certification received by each individual. Personnel who have not been so certified shall not be permitted to conduct operations without supervision.

19. The Contractor shall provide a training, testing, and certification program for personnel assigned to operate AUTEC's shipboard WHE/MHE/OHE in accordance with the requirements of OCD-(18)-02-XX. The Contractor shall assure that all personnel assigned to handle or otherwise work with exercise ordnance, explosives, or pyrotechnic devices are additionally trained, tested, and certified in accordance with the requirements cited in Chapter IX(1) of this Specification. The Contractor shall maintain a record of all such training and certifications received by each individual. Personnel who have not been so certified shall not be permitted to conduct operations without supervision.

20. The Contractor shall assure that all of AUTEC's shipboard WHE/MHE/OHE is periodically inspected, tested, and the load carrying capacity certified in accordance with the requirements of OCD-(18)-02-XX. See also Chapter XIII(1) of this Specification. Repairs shall be performed as required. The Contractor shall keep records of all inspections and maintenance actions performed for each piece of equipment.

21. The Contractor shall provide a Senior Marine Engineer to oversee and coordinate functions relating to Marine Operations support such as hull, machinery, and electrical inspection, maintenance, troubleshooting, repair, planning, equipment/hull modifications, documentation, propulsion and auxiliary systems operation, etc.. This person shall be qualified to perform and/or oversee the following tasks:

a. Fault isolation.

b. Corrective maintenance.

c. System alignment/calibration.

d. New equipment installation and new equipment vessel Operational Acceptance Testing.

e. Equipment modifications including pre-requisite modifications proposals.

f. The conduct of special studies and the preparation of technical reports regarding equipment performance and improvement.

g. Preparation and review of technical documentation.

h. Develop and maintain an inventory of Government-provided consumables, expendables, and repair/spare parts for all Marine Operations equipment in accordance with the policies provided in Chapter XXI(1) of this Specification.

i. Provide technical support to Purchasing for procurement of Marine Operations equipment, services, overhauls/upkeeps, etc. including specification writing; technical evaluation of proposals; cost review; quality review; technical qualification of sources; preparation of inspection and acceptance procedures; and conduct of acceptance test.

j. In accordance with procedures addressed in relevant OCDs, support AUTEC's Configuration Management and Configuration/Drawing Control Systems requirements as relate to vessels and other Marine assets. Provide/maintain complete and accurate engineering drawings; equipment technical (operating, maintenance, etc.) manuals; parts lists; and other requisite documentation. Prepare/submit relevant Modification Proposals (Mod Props), Equipment Addition/Deletion Notices, Requests for Document Change, Document Change Notices, engineering cost estimates, etc.

k. Arrange for manufacturer or other procured support of Marine Operations equipment, services, etc. on a case-by-case basis considering cost effectiveness or other requirements as approved by NUWC.

l. Provide technical assistance to SE & A (see Chapter XVI of this specification) as may be required.

m. Provide NUWC Work Order support.

n. Provide technical interface with NUWC/other activities.

22. The Contractor shall develop/maintain/deliver all required drawings, equipment manuals, studies, failure investigations/analysis, and other documents discussed above, and others as may be requested by NUWC, in a timely manner. Delivered documents shall be complete and accurate.

23. The general approach to accomplishing AUTEC's Marine Operations planning and related engineering needs is that routine day-to-day tasks shall be performed by the Contractor. Arrangements for manufacturer or other procured services to support occasional, extraordinary, or specialty requirements related to this work area shall be made by the Contractor on a case-by-case basis considering cost effectiveness, schedule, or other requirements as approved by NUWC. General requirements include the following:

a. Expertise in matters related to marine: diesel propulsion systems; electrical, hydraulic, and pneumatic power and control systems; hull and

structural material selection, design, and fabrication techniques; fuel and water pumping and piping systems; corrosion control (e.g. coatings, cathodic protection); etc.

b. Conceive, design, and engineer hull/super-structure/systems/equipment modifications and installations, including deck winch/crane arrangements and rigging, etc., in support of engineering changes or unique test requirements. Provide similar support for ocean deployment projects such as single point and multi-anchor taut moorings, scientific instrumentation systems implantation and retrieval, etc. The Contractor shall assure that any ancillary deck equipments or other machinery which handle loads (e.g. winches, tuggers, fairleads/blocks, davits, cranes, gin poles, etc.) are installed either by welding them directly to the deck or by bolting them to foundations which are so welded. Develop appropriate engineering drawings, detailed plans, procedures, and related documentation. Provide as-built drawings for permanent modifications.

c. Diagnose equipment and structural failures/malfunctions. Determine appropriate corrective measures. Restore operation by modification, replacement, or repair, as appropriate.

d. Perform vessel deck strength (e.g. allowable loading) and stability calculations, and perform vessel incline experiments.

e. Study operational problems and recommend solutions including preparing or revising operating, installation, or maintenance documents, developing equipment/hull modifications, etc. Periodically review documentation for accuracy. Prepare training materials and equipment installation checklists.

24. The Contractor shall abide by the AMS for all existing ancillary deck equipment and on-board systems, equipment, and devices. The requirement to complete and submit AMS "Repair

Report Cards" is exempted for this Specification area. Instead, the Contractor shall operate and maintain a PC-based Hull, Machinery, and Electrical Equipment History record. This record shall include the results of all inspections, surveys, and repairs/maintenance actions; a diskette copy shall be provided to NUWC each month. The Contractor shall analyze and utilize such data to refine preventative maintenance schedules, practices, and procedures. Maintenance of new systems, equipment, and devices will be based upon manufacturer-recommended procedures and/or new AMS procedures to be developed by the Contractor.

25. The Contractor shall assure that routine shipboard preventative maintenance activities are scheduled so as not to interfere with scheduled operating commitments.

26. The Contractor shall make reference to the requirements of the Naval Ships Technical Manual (NSTM) for assigned U.S. Navy-built vessels, or to the standards of the American Bureau of Shipping (ABS) for assigned commercially-built vessels, as applicable, for:

a. The development/improvement of AMS for hull, machinery, electrical, and like items.

b. The development of procedures, specifications, and practices for vessel and equipment: improvements; modifications; repairs; operation; overhauls, shipyard availabilities/upkeeps; offshore installations, etc.

c. Achieving and maintaining ABS in-class certification for assigned commercially-built vessels. The Contractor shall adhere to ABS inspection requirements and coordinate with an ABS-recognized marine surveyor to assure credit for each such inspection. The Contractor is responsible for the timely receipt of all ABS inspection reports. Such reports shall be promptly forwarded to NUWC.

27. The Contractor shall maintain AUTEC's 69 (approximately) private aids to navigation and their supporting structures. Such maintenance shall include replacement of lenses, battery packs, and

other internal components of lighted aids, and painting, preservation, etc. of all land-based structures such as range

markers/dayboards, etc. Major maintenance, replacement, etc. of large off-shore buoys is performed by the U.S. Coast Guard. The Contractor shall also maintain AUTEC's off-shore instrumentation platforms. Such platforms include: the three FORACS Range platforms off Site 1; and sea-cable termination platforms off Sites 3 and 4. The Contractor shall develop, and adhere to, a routine maintenance schedule for all of AUTEC's private aids to navigation and off-shore instrumentation platforms. The Contractor shall similarly maintain hurricane moorings, located in the harbor at Site 1, and at Middle Bight, Andros Island, for AUTEC's vessels.

28. The Contractor shall make maximum use of the Site 1 marine support facilities, described in paragraph B, and other support facilities and services described elsewhere in this Specification, in order to make daily marine operations as cost efficient as possible.

29. The Contractor shall plan vessel upkeep and shipyard periods in accordance with the guidelines provided herein. Upkeep periods are normally conducted pier side at Site 1, although work may be identified that can only be conducted at a CONUS facility. Vessels shall normally be scheduled for: upkeep periods, limited to seven days duration, at three month intervals; shipyard overhaul once every five years; and shipyard interim availability at alternate two and a half year intervals. Shipyard periods shall be limited to a maximum period of 70 days total time off-range (i.e. non-availability Site 1) unless otherwise approved by NUWC. Actual schedules will be dictated by AUTEC's tempo of operations.

30. The Contractor shall plan, schedule, and accomplish routine overhaul/upkeep of AUTEC's small boats on an annual basis. All work performed shall comply with safety and environmental protection policies as described in Chapters XXII(1) and XXII(2) of this Specification.

31. The Contractor shall be responsible for the overhaul/replacement of engines in AUTEC's vessels, and shall develop strategies to do this in the most economical fashion possible. Subject to approval by NUWC, the Contractor shall develop and maintain an inventory of commercially rebuilt long block replacement engines, at Site 1 on Andros Island, for those vessels for which return to CONUS

would not be cost effective. The Contractor shall provide services to perform overhauls of the

larger marine diesel engines during scheduled CONUS shipyard availability, or overhaul periods. Engine overhauls shall be to best commercial practice and to manufacturer's specifications unless otherwise directed by NUWC.

32. The Contractor shall develop specifications, and arrange for, CONUS shipyard overhaul/upkeep of AUTEC's larger vessels as approved by NUWC. The Contractor shall prepare work packages, solicit bids, and subsequently be responsible for monitoring the accomplishment and progress of authorized shipyard work and for controlling related costs. Monitoring shall be the responsibility of a qualified, full-time on-site representative of the Contractor (unless otherwise agreed to by NUWC). The on-site representative shall ensure that authorized shipyard work is accomplished in accordance with specifications provided, and shall provide technical evaluation of any changes proposed by shipyard or third party personnel. Any such changes shall be made only upon approval by NUWC. The on-site representative shall keep a daily record of progress and events and shall submit a weekly summary to NUWC, and shall accompany NUWC, ABS, or other authorized personnel during any shipyard inspections.

As requested/approved by NUWC, the Contractor shall similarly develop specifications, solicit bids, and otherwise arrange for and support CONUS shipyard/or other services necessary to modify/ mobilize vessels to support specific Range User tests or unique AUTEC requirements.

33. The Contractor shall be responsible for coordination of port activities at Site 1 on Andros Island. Responsibilities include:

a. Control of harbor traffic and berthing assignments.

b. MSC barge off-loading/on-loading.

c. Fuel barge (or tanker) off-loading.

d. Maintaining a Harbor Common (single-side band 2716 KHz/VHF Channel 16) voice radio communications watch.

e. Fire, flooding, and security inspections of vessels during non-working hours.

f. Inspection of docklines during non-working hours.

g. Control both personnel and vehicular access to pier areas.

h. Safety during fueling and ordinance-handling evolutions.

i. Etc.

34. The Contractor shall submit all NUWC-required technical and administrative reports, described in Chapter XXV of this Specification, as pertain to support of Marine Operations. In keeping with the Contract requirements to report cost, manning, and other items by Specification Chapter/Sub-Chapter, and to satisfy the Government's desire to quantify specific resources allocated to support AUTEC's Marine Support requirements, the Contractor shall cite the following sub-chapter designators when making required reports:

| Sub-Chapter No. | Items Related to |
|---|---|
| 18.0 | Overall Management |
| 18.1 | Marine Engineering/Planning |
| 18.2 | Marine and Waterfront Operations |
| 18.3 | Small Boats/LCM(8)-6775; HAMMERHEAD ONE; and HAMMERHEAD TWO |
| 18.4 | M/V RANGER |
| 18.5 | M/V RANGE ROVER |
| 18.6 | RANGEMASTER (TR-501) |

- - - - - *deleted* - - - - -

35. Crew members aboard vessels assigned to make personnel transfers (e.g. rendezvous boats) shall wear clean, neat uniform clothing.

## D. WORKLOAD FACTORS

1. High speed range support vessels (HAMMERHEAD ONE and HAMMERHEAD TWO) unless otherwise scheduled, only one vessel will be required to be manned and available. The second

vessel will be required to be manned and available to support simultaneous operations on occasion. Only one vessel will be required for operations during periods of range maintenance. Services of one vessel are required to be available on-call 24 hours per day, seven days a week. Workload factors include:

a. Rendezvous operations (i.e. transferring personnel and equipment from/to shore and ships underway) are normally conducted in the vicinity of Site 1, although they may be required anywhere within AUTEC's operating area. It is estimated that 350 such transfers will be required each year.

b. PTS operations support is estimated, at present, to be required four times per year.

c. AUTEC related work in designated operations areas.

2. The transfer of personnel, goods, water, roll-on/roll-off equipment, and material to/from AUTEC's downrange sites currently requires 1 vessel, the LCM(8)-6775, for 2 three-day round trips each week.

3. During exercise weapon firing evolutions, one vessel equipped for recovery is typically required to be on-range. If desired by the Range User, helicopter recovery may be substituted for vessel recovery capability during daylight operations. It is estimated that 300 underway recovery evolutions (1 or more vehicle recoveries per) will be required each year. See also Chapter IX of this Specification. A Ramp Recovery System is installed on the M/V RANGER and M/V RANGE ROVER to accomplish day or night recovery operations during periods of high winds (to 30 knots). This capability is normally used during winter months when higher sea states are expected.

4. During times that MK-30 Target(s) are in-water, it is required by COMNAVSEASYSCOM that a primary target recovery platform be on-range, and that a secondary recovery platform be available. It is estimated that 225 MK-30 Target recovery evolutions will be required each year. See also Chapter VIII of this Specification. Normally this requirement is met by having a helicopter on stand-by at Site 1 (daylight operations) or a vessel available to get underway. In most cases MK-30 Targets are employed in conjunction with exercise weapon firings, one exception, however, is the requirement for MK-30 Target Engineering Runs.

5. Vessel support required is directly related to the tempo of test operations, and logistic support requirements as described in Chapters II, III, IV(1), IX(1), IX(2), and XXI(1) of this Specification. Vessel workload is measured in manning hours (defined as the total time a vessel is manned in preparation for, support of/waiting to, or securing from, underway operations). The estimated average number of manning hours per month for each vessel is as follows: M/V RANGE ROVER = 250; M/V RANGER = 200; RANGEMASTER = 225; rendezvous operations (HAMMERHEAD ONE or HAMMERHEAD TWO)=50; LCM(8)-6775 = 150. The manning requirement for simultaneous operation of the second of AUTEC’s two high speed range support vessels (HAMMERHEAD ONE or HAMMERHEAD TWO) is estimated to entail one 1 week evolution each three months. The actual underway hours of the vessels is less than the manning hours. The M/V RANGER and M/V RANGE ROVER shall occasionally be deployed in support of open-ocean RDT&E or other projects for 30 days or more. It is not expected that both vessels will be simultaneously so employed. The frequency of open-ocean deployments is estimated at one per year for each vessel.

6. Small boat maintenance requirements may be estimated from the following: approximately three small boats (e.g. typically 17 foot Boston Whalers or equivalent) with trailers and outboard motors are distributed among the various Andros Island downrange sites. One 22 foot long conventional hull, and three 22 foot long rigid hull inflatable (ALMAR) boats, with outboard motors, are located at Site 1 for general personnel/light equipment movement, and for use with the above described Ramp Recovery System. Two 22 foot fiberglass boats with outboard motors, one at Site 1 and one at West Palm Beach, FL, are provided to support diving operations. Finally, three boats are provided to support oil or other spill prevention/clean-up operations; two are 19 foot Boston Whalers with outboard motors, while the third is an oil-boom deployment platform boat powered by two outboard motors.

7. Various engineering projects relating to design and implementation of vessel/equipment modifications, installations, related fabrication, etc., are anticipated each year. The scope/ number of such projects are estimated as follows:

a. Less than $5K = 40

b. $5K to $25K = 10

c. $25K to $100K = 2

8. Planning for/support of CONUS upkeep/overhauls is as defined in paragraph C. Scheduled overhauls for marine prime movers, etc., may be estimated from information contained in paragraph C and paragraph D.5 (above).

9. A continuous watch, 24 hours per day, 365 days per year will be maintained on AUTEC's Harbor Common radio circuits.

10. During non-work hours each vessel shall be monitored for fire, flooding, security, etc. at least once every two hours.

## E. KEY PERSONNEL/PERSONNEL QUALIFICATIONS

1. Key Personnel:

a. Senior Marine Engineer

1. Minimum Number Required: 1

2. Education: BS Degree in Marine/Mechanical/Ocean Engineering, Naval Architecture, or graduate of a state or federal maritime academy, or U.S. Naval or Coast Guard Academy with equivalent degree.

3. Experience: As a minimum, the person assigned shall have 10 years experience and progressive responsibility in the commercial marine industry, five years of which must have been in an area related to the construction, conversion, or repair of diesel powered marine vessels. Experience should include design, fabrication, installation, and repair of steel hull, bulkhead, and topside sections and structures, diesel propulsion systems, diesel-powered generator and other auxiliary systems, and shipboard electrical, hydraulic, and pneumatic power and control systems. Must have experience preparing technical documentation (e.g. specifications, drawings, etc.).

This person must be thoroughly familiar with marine safety and pollution issues and regulations, preventative maintenance concepts, shipboard communications and navigation systems, and with the rules, regulations and practices of authoritative/regulatory agencies such as USCG, ABS, and NAVSEA.

The person assigned should have at least 5 years direct supervisory experience and demonstrated ability to motivate personnel, meet schedules, and to coordinate activities of an organization of comparable complexity to that of AUTEC's Marine Support Operation.

4. Other: Must have a good working knowledge of shipboard manning requirements and various maritime skills. Good oral and written communications skills are required.

b. Ocean Vessel Captain(s) (M/V RANGER, M/V RANGE ROVER):

1. Minimum Number Required: 2

2. Education: Graduate of a state or federal maritime academy, or U.S. Naval or Coast Guard Academy, as a deck officer.

3. Experience: Must hold a current U.S. Coast Guard masters license, or license to operate diesel-powered vessels of 300 gross registered tons, or more, in the inland and coastal waters of the eastern seaboard and Gulf Coast of the United States, the Gulf of Mexico, and in the open waters of the Atlantic Ocean in all seasons. Experience must include at least three years of employment, as a licensed deck officer (captain or mate) or licensed operator, aboard twin-screw vessel(s) operating under conditions wherein precise navigation, station keeping, and close-quarter maneuvering were required. Must be competent in piloting and electronic navigation (including LORAN C, SATNAV, GPS, radar, etc.). Must be intimately familiar with both the international and U.S. inland rules of the road and buoyage systems. Must be familiar with accepted marine radio voice communication procedures and practices. Must be familiar with U.S. Customs procedures. Must have experience with deck cargo load-out and securing procedures. Must be certified per OCD-(18)-26-XX.

   Note: A total of 5 years of experience (or 3 years of direct AUTEC experience), as described above, may be substituted for the formal education requirement.

4. Other: Must exhibit tact and be able to interact with scientific and other technical personnel who may not be conversant with daily shipboard operations and limitations.

c. Torpedo Recovery Boat Captain (RANGEMASTER):

1. Minimum Number Required: 1

2. Education: Graduate of a state or federal maritime academy, or U.S. Naval or Coast Guard Academy, as a deck officer.

3. Experience: Must hold a current U.S. Coast Guard masters license, or license to operate diesel-powered vessels of 100 gross registered tons, or more, in international waters. Experience must include at least three years of employment, as a licensed deck officer (captain or mate) or licensed operator, aboard twin-screw vessels operating under conditions where-in precise navigation, station keeping, and close-quarter maneuvering were required. Must be competent in piloting and electronic navigation (including LORAN C, SATNAV, GPS, radar, etc.). Must be intimately familiar with both the international and U.S. inland rules of the road and buoyage systems. Must be familiar with marine radio voice communications procedures and practices. Must be certified per ODC-(18)-26-XX.

Note: A total of 5 years of experience (or 3 years of direct AUTEC experience), as described above, may be substituted for the formal education requirement.

d. Boat Captains (LCM(8)-6775, HAMMERHEAD ONE, HAMMERHEAD TWO):

1. Minimum Number Required: 2

2. Education: No requirement.

3. Experience: Must hold a current U.S. Coast Guard license to operate diesel-powered vessels of like size and horsepower in international waters. Experience must include at least three years employment as a licensed deck officer (captain or mate) or licensed operator aboard comparable or larger vessels. Must be competent in piloting and electronic navigation (including LORAN C, GPS, and radar). Must be familiar with both the international and U.S. inland rules of the road and buoyage systems. Must be familiar with marine radio voice communications

procedures and practices. Must be certified per ODC-(18)-26-XX.

Note: A total of 3 years of direct AUTEC experience may be substituted for the licensed experience described above .

4. Note: When simultaneous operations of the second of AUTEC's two high speed range support vessels is required, a qualified Alternate Boat Captain (see paragraph E.1.f.) may be assigned for HAMMERHEAD ONE or HAMMERHEAD TWO. Under circumstances when no qualified Alternate Boat Captain is available, a person certified in writing by the Contractor as meeting the qualifications cited in paragraphs 1, 2, and 3 above may, with NUWC's permission, be temporarily assigned as Boat Captain but may not perform rendezvous operations. Such temporarily assigned individuals will not be considered to be Key Personnel.

e. Vessel Chief Engineer(s) (M/V RANGER, M/V RANGE ROVER, RANGEMASTER):

1. Minimum Number Required: 3

2. Education: Graduate of a state or federal maritime academy, or U.S. Naval or Coast Guard Academy, as an engineering officer.

3. Experience: Must hold a current U.S. Coast Guard engineering license which matches the admeasured tonnage, class, and horsepower of the AUTEC vessel to which they are assigned. The license must be valid for operation in inland and coastal waters of the eastern seaboard and Gulf Coast of the United States, and in the open waters of the Atlantic Ocean in all seasons. Must be fully competent to diagnose and direct repair of problems with high and medium speed marine diesel engines, and electrical, hydraulic and pneumatic power transmission, portable and cooling water, sewage treatment, and fuel-pumping systems which are typically found aboard such vessels. Must possess basic understanding of structural steel and naval architecture. Must be familiar with scheduled preventative and corrective maintenance systems and have the demonstrated ability to carry out, or direct, maintenance tasks as required.

   Note: A total of 5 years of experience (or 3 years of direct AUTEC experience) as a licensed engineer aboard comparable or larger vessels, as described above, may be substituted for the formal education requirement.

4. Other: Must show professional ability to direct and motivate personnel assigned to the vessel as assistant engineers. Must exhibit tack and be able to interact with scientific and other personnel who may not be conversant with daily shipboard operations and limitations.

f. Alternnate Boat/Vessel Captains and Chief Engineers:

1. When any designated Key Person is temporarily (for periods not to exceed 30 days) unavailable (due to vacation, sickness, etc.) to perform the tasks/responsibilities described above, the Contractor shall identify and recommend a qualified alternate in order that boat/vessel support commitments may continue to be met.

2. As a minimum, any such alternate must hold a current U.S. Coast Guard license, as described above, applicable to the position, and must be certified per OCD-(18)-26-XX.

3. Key Person absences in excess of 30 days shall be governed by the provisions of Section H, paragraph H-26, of this contract.

2. Personnel Qualifications:

*- - - - - deleted - - - - -*

## F. APPLICABLE DOCUMENTS

| | |
|---|---|
| Naval Ships Technical Manual (NSTM); | Chapters as listed in Table XVIII-4 |
| American Bureau of Shipping (ABS) Standards; | Volumes as listed in Table XVIII-4 |
| OPNAVINST 5090.1 (Series); | Environmental and Natural Resources Program Manual |
| OCD-(04.1)-26-XX; | Emergency Operations Reaction Plan |

| | |
|---|---|
| OCD-(18)-00-XX; | Personnel Transfer at Sea |
| OCD-(18)-01-XX; | Assistant Harbormaster |
| OCD-(18)-02-XX; | Operation, Certification, and Training Requirements for Marine Weight and Ammunition Handling Equipment Aboard AUTEC Vessels |
| OCD-(18)-03-XX; | Vessel Captain |
| OCD-(18)-04-XX; | Procedure for the Leasing of a Vessel |
| OCD-(18)-06-XX; | Stream and Recovery of Towed Arrays for British Class Submarines |
| OCD-(18)-07-XX; | Shipyard Repair Final Report |
| OCD-(18)-09-XX; | Damage Control and Safety Equipment Onboard AUTEC Vessels |
| OCD-(18)-12-XX; | VHF Bridge-to-Bridge Radios |
| OCD-(18)-15-XX; | Marine Operations Limitations |
| OCD-(18)-16-XX; | Harbor Vessel Control |
| OCD-(18)-18-XX; | Maintenance of Aids to Navigation |
| OCD-(18)-21-XX; | Deck Logs |
| OCD-(18)-25-XX; | Vessel Mate |
| OCD-(18)-26-XX; | Marine Operations Training/Certification Program |
| OCD-(18)-27-XX; | AUTEC Vessel Presail Requirements |
| OCD-(18)-49-XX; | Marine Craft Quarterly Upkeep Schedule |

| | |
|---|---|
| OCD-(18)-50-XX; | Operations Acceptance Test for New Vessels |
| OCD-(18)-52-XX; | Marine Vessel Engineers |

| | |
|---|---|
| OCD-(18)-71-XX; | Dockside Fueling |
| OCD-(18)-72-XX; | Maintenance and Operation of Government-Furnished Outboard Motors, Boats, and Related Equipment |
| OCD-(22.2)-03-XX; | Oil Spill Prevention at Sea |
| OCD-(22.2)-04-XX; | Range Operations Environmental Mitigation Procedures |
| Other OCDs; | Relevant/Related OCDs as may be listed in Table XV-4 |
| APP 1-98G; | Mail Services-AUTEC Project |
| APP 1-103G; | Downrange Visitor Control |
| APP 2-74G; | AUTEC Recreation Association Marina |
| APP 7-8G; | Gasoline, Fuel Oils and Lubricants: Consumption and Control |
| APP 8-24G; | Admiralty Incident Reporting |
| APP 8-25G; | AUTEC Waterfront Procedures and Regulations |
| APP 8-27G; | Community Support Missions |
| APP 11-3G; | Fire Protection Policy |
| APP 11-5G; | Hurricane Plan, Andros Ranges |
| APP 11-9G; | Surface Preparation and Painting |
| APP 11-13G; | Hazardous Waste Management Policy |
| APP 11-18G; | Confined and Enclosed Space Safety |

AUTEC Vessel Particulars

AUTEC Installation Spill Contingency Plan

AUTEC Hazardous Waste Management Plan

AUTEC Solid Waste Management Plan

## MAJOR AUTEC VESSELS

| NAME/DESIGNATOR | LENGTH (FT) | TONNAGE | PROPULSION |
|---|---|---|---|
| RANGER | 192 | 300 (Gross)<br>- | Two: EMD 12-646-E6<br>1,500 HP Diesels |
| RANGE ROVER | 180 | 300 (Gross)<br>- | Two: Caterpillar D-399 Tac<br>1,125 HP Diesels |
| - - - - - *deleted* - - - - - | | | |
| RANGEMASTER (TR-501) | 110 | 99 (Gross)<br>68 (Net) | Two: GM16V-92N<br>600 HP Diesels |
| LCM(8)-6775 | 74 | -<br>46 (Net) | Two: GM8V-71N<br>325 HP Diesels |
| HAMMERHEAD ONE | 48 | 5 (Gross) | Two: Caterpillar 3196 620 HP Diesels |
| HAMMERHEAD TWO | 48 | 5 (Gross) | Two: Caterpillar 3196 620 HP Diesels |

Table XVIII-1

MARINE OPERATIONS ANCILLARY DECK EQUIPMENT

| Equipment | Mfr | Qty |
|---|---|---|
| Winch, Double Drum Mooring | SMATCO | 1 |
| Winch, General Purpose | General Dynamics | 1 |
| Winch, Towing | SEAMAC | 1 |
| Winch, Towed Array | TSE | 1 |
| Crane, Deck | Coastal | 2 |
| Generator, Portable (100 KW) | - | 1 |
| Generator, Portable 30 KW | - | 1 |
| Generator, Portable 5KW | - | 1 |
| Van, Deck (6 Person Berthing) | - | 2 |
| Van, Deck (Instrumentation/Equipment) | - | 2 |
| Van, Deck (Battery Inverter) | - | 1 |
| Roller, Stern Bolt-On (48” diameter) | - | 1 |
| Roller, Stern Bolt-On (18” diameter) | - | 1 |
| Sheave, Cable, Stern Bolt-On | - | 1 |
| Davit, Portable (750 lb. capacity) | - | 1 |
| Power Distribution Unit, Portable (30 KVa) | - | 1 |
| Ramp Recovery Systems | AUTEC | 2 |

Table XVIII-2

MARINE OPERATIONS MAINTENANCE EQUIPMENT

| Equipment | Mfr | Qty |
|---|---|---|
| Drill Presses | - | 4 |
| Bench Grinders | - | 5 |
| Air Compressor Sets | - | 4 |
| Sandblast Cabinets | - | 2 |
| Armature Oven | - | 1 |
| Portable Transformer Power Center | - | 1 |
| Belt Sander (Floor Model) | - | 2 |
| Parts Cleaning Tanks | - | 7 |
| Electric Fork Lift (Floor Model) | - | 1 |
| Pipe Threading Machine | - | 1 |
| Hydraulic Hose Assembling Machine | - | 1 |
| Hose Cut-off Saw | - | 1 |
| 750 lb. Lift | - | 1 |
| Hand Bench Shear | - | 1 |
| Battery Chargers | - | 2 |
| Paint Shaker | - | 1 |
| Stencil Machine | - | 1 |
| Steam Cleaner | - | 1 |
| Pressure Washer | - | 1 |
| Band Saw | - | 1 |
| Diagnosis Diesel Kit | - | 1 |
| - - - - - *deleted* - - - - - | | |
| Miscellaneous Hand Tools, Test Meters, Shop and Office Equipment | - | Various |

Table XVIII-3

# APPLICABLE NSTM AND ABS REFERENCE DOCUMENTS

## A. NAVAL SHIPS TECHNICAL MANUAL

| Chapter No. | Vol. No. | Title |
|---|---|---|
| 001 | - | General - NSTM Publications Index and User's Guide |
| 074 | 1 | Welding and Allied Processes |
| | 2 | Non-Destructive Testing of Metals, Qualification and Certification Requirements for Naval Personnel |
| 075 | - | Threaded Fasteners |
| 077 | - | Personnel Protection Equipment |
| 078 | - | Gaskets, Packings, and Seals |
| 079 | 1 | Damage Control - Stability and Buoyance |
| | 2 | Damage Control - Practical Damage Control |
| | 3 | Damage Control - Engineering Casualty |
| 090 | - | Inspections, Tests, Records, and Reports |
| 094 | - | Trials |
| 096 | - | Weights and Stability |
| 100 | - | Hull Structures |

Table XVIII-4

Table XVIII-4

APPLICABLE NSTM AND ABS
REFERENCE DOCUMENTS

A. NAVAL SHIPS TECHNICAL MANUAL (continued)

| Chapter No. | Vol. No. | Title |
|---|---|---|
| 233 | - | Diesel Engines |
| 244 | - | Bearings |
| 245 | - | Propellers |
| 252 | - | Ship Control Equipment |
| 262 | - | Lubricating Oils, Greases, Hydraulic Fluids, and Lubricating Systems |
| 300 | - | Electric Plant General |
| 302 | - | Electric Motors and Controllers |
| 310 | - | Electric Power Generators and Conversion Equipment |
| 313 | - | Portable Storage and Dry Batteries |
| 320 | - | Electric Power Distribution Systems |
| 330 | - | Lighting |
| 400 | - | Electronics |
| 422 | - | Navigation and Signal Lights |
| 430 | - | Interior Communications Installations |

Table XVIII-4 (cont.)

APPLICABLE NSTM AND ABS
REFERENCE DOCUMENTS

A. NAVAL SHIPS TECHNICAL MANUAL (continued)

| Chapter No. | Vol. No. | Title |
|---|---|---|
| 503 | - | Pumps |
| 504 | - | Pressure, Temperature, and Other Mechanical and Electromechanical Measuring Instruments |
| 505 | - | Piping Systems |
| 510 | - | Ventilating, Heating, Cooling, and Air Conditioning Systems for Surface Ships |
| 512 | - | Fans |
| 516 | - | Refrigeration Systems |
| 533 | - | Potable Water Systems |
| 541 | - | Petroleum Fuel Storage, Use, and Testing |
| 551 | - | Compressed Gases; Generating, Handling, and Storage |
| 555 | - | Firefighting-Ship |
| 556 | - | Hydraulic Equipment (Power Transmission and Control) |
| 562 | - | Surface Ship Steering Systems |

Table XVIII-4 (cont.)

APPLICABLE NSTM AND ABS
REFERENCE DOCUMENTS

A. NAVAL SHIPS TECHNICAL MANUAL (continued)

| Chapter No. | Vol. No. | Title |
|---|---|---|
| 581 | - | Anchors and Anchoring |
| 583 | - | Boats and Small Craft |
| 584 | - | Stern Gates, Ramps, Bow Doors, Turntables, and Water Barriers |
| 589 | - | Cranes |
| 593 | - | Pollution Control |
| 611 | - | Fenders |
| 613 | - | Wire, Fibre Rope, and Rigging |
| 631 | - | Preservation of Ships in Service (Surface Preparation and Painting) |
| 633 | - | Cathodic Protection |
| 634 | - | Deck Coverings |
| 635 | - | Thermal, Fire and Acoustic Insulation |
| 670 | - | Stowage, Handling, and Disposal of Hazardous General Use Consumables |
| 700 | - | Shipboard Ammunition Handling and Storage |
| 997 | - | Docking Instructions and Routine Work in Dry Dock |

Table XVIII-4 (cont.)

APPLICABLE NSTM AND ABS
REFERENCE DOCUMENTS

A. NAVAL SHIPS TECHNICAL MANUAL (continued)

| Chapter No. | Vol. No. | Title |
|---|---|---|
| 9120 | - | Hull Fittings, Lashing Gear, and Access Closures |
| 9200 | - | Winches and Capstans |
| 9250 | - | Towing Gear |
| 9332 | - | Sanitation, Living, Berthing, Medical, and Dental Equipment |
| 9420 | - | Propulsion Reduction Gears, Couplings, and Associated Components |
| 9430 | - | Shafting, Bearings, and Seals |
| 9880 | - | Damage Control; Compartment Testing and Inspection |
| 9930 | - | Firefighting - Ship |

B. AMERICAN BUREAU OF SHIPPING (ABS) STANDARDS (MARINE ENGINEERING - 8 VOLUMES)

Aluminum Vessels

Offshore Installations

Reinforced Plastic Vessels

Table XVIII-4 (cont.)

Table XVIII-4 (cont.)

APPLICABLE NSTM AND ABS
REFERENCE DOCUMENTS

B. AMERICAN BUREAU OF SHIPPING (ABS) STANDARDS (MARINE ENGINEERING - 8 VOLUMES) (CONT.)

Single Point Moorings

Steel Barges

Steel Vessels

Steel Vessels Under 100 Meters

Underwater Systems and Vehicles

# XIX. AIR OPERATIONS

## 1. FIXED-WING AIRCRAFT

### A. GENERAL

Andros Island's remote location necessitates the use of fixed wing aircraft as the only viable means of routinely transporting personnel and high priority cargo to and from Site 1. The limited commercial aviation schedule to and from Andros Island, and the lack of any direct West Palm Beach, FL/Andros Island commercial flights, dictate that AUTEC must provide its own fixed-wing aircraft transportation.

### B. DESCRIPTION

The number of AUTEC Project, Range User, and other visiting personnel requiring transportation to and from Site 1 on Andros Island, as well as the need to transport small items of high priority cargo and mail, necessitate routinely scheduled daily flights between the West Palm Beach, FL, International Airport and the Andros Town Airport on Andros Island. Periodic cargo-only flights may be scheduled to transport priority cargo on a case-by-case basis.

In addition to the scheduled flights listed in Table XIX-1, fixed-wing air transportation services are also needed to satisfy specific AUTEC and Range User requirements to transport personnel and/or cargo to and from Andros Island at other times on a case-by-case basis. Most of these flights are also from/to the West Palm Beach, FL, International Airport.

Fixed-wing air transportation services provided under this Contract must comply with all the requirements of Federal Aviation Administration (FAA) Regulation (e.g. FAR) Part 135 as appropriate. Some requirements stated herein exceed those minimum requirements of FAR Part 135 as it is NUWC's intention that the safest practicable service be provided. To transport DoD civilian/military personnel, their dependents, and DoD-owned cargo, air transportation services provided under this Contract must additionally meet DoD Commercial Air Transportation Quality and Safety Review Program requirements established by the USAF Air Mobility Command Air Carrier Survey and Analysis Office (HQ AMC/DOB), in accordance with DoD Directive 4500.53 (Series), and as published in 32 CFR Part 861.

To support the aircraft provided by the Contractor, the Government furnishes all requisite tools, test equipment, and other related items. A representative list of such support equipment is provided in Table XIX - 2. Actual inventory is as provided by NUWC.

U. S. Government and Contractor employees assigned for duty to AUTEC, Andros Island, and their dependents, are to be allowed no-cost air transportation to/from Andros Island on a space-available basis.

## C. CONTRACTOR RESPONSIBILITIES

1. The Contractor shall provide, maintain, operate, schedule, and control the use of fixed-wing aircraft transportation services and assets in accordance with published Operations Directives, Workload Factors given in paragraph D, Applicable Documents cited in paragraph F, and other requirements stated below. Special requirements may be tasked by NUWC Work Order or Letter of Direction. The Contractor shall develop and adhere to a daily West Palm Beach, FL - Andros Island, Bahamas, round-trip flight schedule, commensurate with the routine Workload Factors given in paragraph D. Such schedule shall be developed giving priority to the needs of space-required passengers. Such schedule will be incorporated as Table XIX-1 by reference.

2. All aircraft provided by the Contractor must be listed on the Contractor's FAA Air Carrier Certificate, and flight crew members must be trained, qualified, and scheduled in accordance with Federal Aviation Regulations (FAR) Part 135 rules. The Contractor shall be fully responsible for obtaining and maintaining the currency of all certifications required by, and providing all fixed-wing air transportation services in compliance with, FAR Part 135, as well as those established by HQ AMC/DOB (see paragraph C.5 below).

3. The Contractor shall be fully responsible for obtaining all required landing rights and clearances, airport operating leases, etc., and for paying any applicable fees (landing, parking, customs, etc.) as may be necessary to perform the fixed-wing aircraft support services and requirements of this Specification. The cost of such rights, leases, fees, etc. shall be allowable as direct cost reimbursable expenses under this Contract.

4. In addition to other requirements, the fixed-wing aircraft provided under this Contract must comply with the following specifications:

a. Be equipped with two turbo-propeller engines.

b. Have a minimum range = 500 nautical miles.

c. Have a pressurized cabin and an operating ceiling of at least 20,000 ft (above sea level).

d. Have a minimum usable capacity (in the AUTEC environment) of 19 available passenger seats or 4,400 pounds of payload (exclusive of fuel), or a combination thereof.

e. Be FAA-certified, equipped and maintained for flight in the AUTEC environment.

f. Be equipped with a weather radar.

g. Be equipped with main cabin temperature control equipment adequate to maintain passenger comfort in the AUTEC environment, and have on board first-aid and emergency equipment, accessible to passengers and appropriate to the environment of operation. On board equipment for extended over water flights shall include life preservers in accordance with FAR Part 135.167(a)(1).

h. Meet airworthiness standards for Transport Category aircraft or Commuter Category aircraft as defined under FAR Parts 25 or 23 respectively.

i. Be fully equipped and FAA approved for day and night, VFR, as well as IFR operations in accordance with the performance requirements of FAR Part 135.181, and have on board a complete set of aeronautical charts, and approach plates, for each required pilot, covering the area of operation. Aircraft equipment will include (as a miniumum):

(1) Directional Gyro.
(2) Artificial Horizon.
(3) Rate of Turn Indicator.
(4) Vertical Speed Indicator.
(5) LORAN or GPS.
(6) Emergency Locator Transmitter.
(7) Dual VHF Receivers and Transmitters.
(8) Two Independent navigation systems, at least one of which includes VOR/DME capability.
(9) Capability to perform a precision approach other than a ground controlled approach.
(10) A Transponder.
(11) Air Speed Indicator.
(12) Altimeter.

j. The Second-in-Command position must include (as a minimum) the following operable equipment:

(1) Suitable operating controls to manipulate all primary and auxiliary flight surfaces, lift/drag devices, and landing gear.
(2) Air Speed Indicator.
(3) Altimeter.
(4) Artificial Horizon.
(5) Gyroscopic Direction Indicator or equivalent.
(6) An independent navigation system.

k. Be able to operate, with a usable payload of at least 4,400 pounds in summer weather (e.g. 35 degrees centigrade), from the 4,300 foot-long runway at the Andros Town Airport.

l. Be equipped with cabin and engine fire detection and fire extinguishing systems.

m. Be equipped with cabin interior components which meet flammability standards of FAR 23.853 or 25.853 as applicable.

.

n. Be equipped to provide "COMBI" service, including movable/re-movable bulkhead(s) and re-movable seats. Aircraft provided shall have an appropriately sized cargo door, in addition to passenger "air-stairs", and shall be equipped with appropriate cargo tiedown rings, fittings, straps, etc. as required to prevent any damage due to cargo shifting in-flight.

o. Be equipped with a cockpit voice recorder and a flight data recorder.

p. Be equipped with upholstered airliner type seats.

5. All aircraft offered under this Contract will be made available for prior inspection and approval by NUWC. As required by DoDD 4500.53 (Series), the Contractor's air transportation services must meet air transportation quality and safety inspection requirements established by the Air Mobility Command (AMC) Air Carrier Survey and Analysis Office (HQ AMC/DOB) and must be approved for DoD use (DoD

personnel, their dependents, and DoD-owned cargo are not allowed to utilize air transportation services that are not so approved). AMC-established air transportation quality and safety requirements and DoD approval are in addition to Federal Aviation (Administration) Regulation (FAR) requirements cited elsewhere in this Chapter. AMC field survey teams evaluate the Contractor's operational safety and maintenance programs, training program, proficiency standards, management, scheduling and dispatch practices, crew training/qualifications, maintenance facilities, crew/aircraft records, weight and balance program, aircraft inspection, quality control, etc., biennially, and will monitor on-going operations. The FAA may be invited to participate in such inspections.

6. The Contractor shall ensure that on-board passenger facilities and comfort items, as well as the overall appearance of the air crew members and aircraft provided, are maintained as follows:

a. Cabin temperature must be controlled to provide reasonable comfort for passengers.

b. Cabin appointments, seats, fixtures, etc., must be maintained in a safe, clean, presentable condition. Holes, unmended tears, or unsightly wear or appearance are unacceptable.

c. Floor coverings, if installed, must be maintained in a safe, clean, presentable condition. Holes, unmended tears, or unsightly wear or appearance are unacceptable.

d. Prior to passenger embarkation, the cabin interior shall be serviced and any dirt or debris from the previous flight removed.

e. Each seat shall be equipped with a clean air-sickness container.

f. Aircraft will be maintained in a good state of repair and appearance. Aircraft will not show deterioration or neglect such as unrepaired cracks, punctures, loose rivets, missing fasteners, deterioration of paint or windows, etc. Decals and other cosmetic features shall be maintained in good condition. These requirements are in addition to airworthiness requirements.

g. All aircraft crew members shall wear clean, neat, distinctive uniforms and name tags similar to those accepted/worn in the profession, but without corporate identity.

7. The Contractor shall develop, promulgate, and abide by regulations governing passage aboard fixed-wing aircraft provided under this Contract. Such procedures shall be promulgated as APP 8-14G and shall be consistent with the provisions of the relevant APPs and other Applicable Documents cited in paragraph F.

8. Except where more stringently required by the provisions and regulations of FAR Part 135, the Contractor shall provide aircrew personnel, to include a Pilot-in-Command and a Second-in-Command pilot, whose minimum qualifications shall be as follows:

a. Pilot-in-Command - FAA Airline Transport Pilot Certificate, Commercial Instrument Rating, appropriate Airplane Category Rating, Multi-Engine Land Class Rating, annual Second Class Medical Certificate, 2000 hours flight time (100 hours of which shall have been logged within the last 12 calendar months) as Pilot-in-Command, and have at least 500 hours flight time and made at least 10 take offs and 10 landings as Pilot-in-Command in the type airplane (as defined in FAR Part 135.293(b)) being operated.

b. Second-in-Command - FAA Commercial Pilot Certificate with appropriate Airplane Category Rating, Multi-Engine Land Class Rating, Commercial Instrument Rating, annual Second Class Medical Certificate, 1000 hours flight time as pilot, and 500 hours flight time as Pilot-in-Command.

c. All Pilots-in-Command and Second-in-Command Pilots shall meet Initial and Recurrent training requirements as required by FAR Part 135.293. They shall also meet the currency requirements of FAR Part 135.247, have current FAR Part 135.297 instrument proficiency checks, and have current FAR Part 135.293 competancy checks. The compentancy check for the Second-in-Command pilots shall include at least one precision approach, one non-precision approach, and one missed approach.

9. The Contractor shall develop and maintain an inventory of such Government furnished tools, parts, maintenance items/documentation, etc. as may prudently be expected to be required to perform minor aircraft repairs at the Andros Town Airport.

10. Mechanics provided under this Contract shall specifically have at least five years aircraft maintenance experience, two of which must have been maintaining turbine-engined aircraft, and shall be Airframe and Power Plant licensed by the FAA.

11. - - - *moved to Chapter XIX(2)* - - -

12. The Contractor shall develop, keep current, and be prepared to immediately implement a company-specific AUTEC Aviation Pre-Mishap Plan. The plan shall be comprehensive, and shall delineate individual responsibilities, specific actions, and procedures which are to be implemented

and followed should a mishap occur in the vicinity of Andros Island, which involves an aircraft provided under this contract, or any other aircraft.

13. The Contractor shall immediately notify NUWC, the Procuring Contracting Officer (PCO), and HQ AMC/DOB of any case where an

aircraft performing services pursuant to this Contract is involved in an accident as defined by the Safety Investigation Regulations contained in 49 CFR Part 830. The Contractor is responsible for ensuring that the following information is transmitted by the most expeditious means available:

a. Carrier and trip number.
b. Aircraft type and number.
c. Date, time, and place of accident.
d. Point of departure/point of destination.
e. Other pertinent, amplifying information as is available.

Oral notification shall be followed by a formal report. The Contractor shall provide notification to civil authorities as required by law or regulation.

14. The Contractor shall develop and maintain an inventory of Government furnished consumables, expendables, and repair/spare parts to support AUTEC's fixed-wing aircraft operations in accordance with the policies provided in Chapter XXI(1) of this Specification.

15. The Contractor shall, as the situation allows, utilize the most economical source of aviation fuel, lubricants, etc., available. Those available at AUTEC's Site 1 on Andros Island are provided under separate DoD contract. DoD Aviation Fuel Identaplates (DD 1896), for refueling off-site at other U.S. military installations, and Aviation Into-plane Reimbursement (AIR) Cards, for refueling at commercial airport locations, will be made available by NUWC. AIR Cards may be used to purchase fuel, etc., from vendors under contract to the Defense Energy Support Center at DoD Standard Rates (established each Government Fiscal Year) as well as from non-contract vendors. If fuel is purchased commercially, the cost shall be a direct-cost reimbursable expense under this contract.

16. The Contractor must depart and re-enter CONUS through a "Port-of-Entry" in accordance with U. S. Customs and Immigration regulations. The Contractor shall similarly comply with all Commonwealth of the Bahamas Customs and Immigration regulations.

17. The Contractor shall arrange for any necessary landing rights and pay any applicable fees at any commercial airport at which the Contractor may be required to land in performance of this Contract. Such fees shall be direct-cost reimbursable expenses under this Contract.

18. The Contractor shall comply with all local regulations/directives which may pertain to the conduct of flight operations, and the conduct of personnel on the ground, in the event that the Contractor is required to land at a military facility.

19. The Contractor may be required to air-transport small quantities of hazardous or dangerous materials or items to/from Andros Island. All

such materials/items shall be identified, documented, and manifested as required by applicable portions of the Code of Federal Regulations. See Chapter XXII(2) of this Specification.

20. In addition to the scheduled flights shown in Table XIX-1 the Contractor shall also support such other flights as NUWC determines to be pertinent to AUTEC's mission. Such flights will be requested by NUWC at least 48 hours in advance (normally at least one week in advance) and may entail transporting passengers and/or cargo. Such additional services shall comply with all FAA regulations (applicable to the service requested) and must be DoD approved, if DoD personnel/dependents or DoD-owned cargo are to be transported, and shall be provided by the most cost-effective means available.

21. If, for a routinely scheduled passenger flight, the number of passengers traveling on a space-required (e.g. official travel status) basis exceeds the capacity of the aircraft normally provided, the Contractor shall procure/provide such additional aircraft service(s) as is/are necessary to accommodate them. Unless otherwise allowed by NUWC, such service(s) shall be provided within one (1) hour of the normally scheduled departure time. Such additional service(s) shall comply with all FAA regulations and DoD approvals applicable to the primary service.

22. NUWC fully expects that the Contractor will provide fixed-wing air transportation services as scheduled, and that aircraft will depart/arrive on time. Delays due to weather or air traffic control considerations are acceptable. Infrequent delays (as might be experienced by a scheduled commercial air carrier as a percentage of scheduled flights) due to aircraft mechanical problems will be allowed, but shall in no case exceed four hours. Unless otherwise allowed by NUWC, the Contractor shall procure/provide substitute air transportation service within the aforementioned four hour limit. Such substitute service must comply with all FAA regulations and DoD approvals applicable to the primary service.

23. The Contractor shall ensure that an IFR flight plan is prepared, submitted, and adhered to for all flights provided under this Contract, except as necessary for the take off/departure from, or approach/landing at, Bahamian VFR-only airports. The Contractor shall additionally ensure that pilots compute and document the weight and balance for all flights, and assure that the gross weight and center of gravity do not exceed the aircraft's limitations. Actual or interrogated weights must be used. Completed weight and balance forms, and other documentation for each flight, shall be retained on file for a minimum of 30 days in order to demonstrate compliance with the flight locating requirements of FAR Part 135.79.

24. The Contractor shall ensure that aircraft provided for operations in performance of this Contract are either owned by the Contractor or leased by the Contractor under such agreement as to ensure the Contractor's complete control over their use and their complete availability to support the requirements of this Contract. The Government may, with due consideration given to the time required for FAA approval and subsequent implementation, request modification(s) to and/or reconfiguration(s) of

these aircraft in order to support special Range User/AUTEC test requirements. To the extent that ongoing FAR Part 135 operational requirements would not be impacted, the Contractor shall make such modification(s)/reconfiguration(s) in accordance with current FAA airworthiness regulations.

25. The Contractor shall furnish the fixed wing air transportation services described in a manner which fully supports the AUTEC mission. When not fully engaged in direct mission support, the Contractor may, with Government approval, maximize aircraft utility to enhance Contract cost recoveries and may develop a policy to utilize space-available seating, and/or schedule flights (on a not-to-interfere basis/no additional cost to the Government) for purposes such as Welfare and Recreation (see Chapter XXVII of this Specification). The Contractor shall assess and collect fees for such usage. Such fees shall be returned to the Government and reported in the monthly Cost Control Report (see Chapters XXI (1) and XXV of this Specification).

26. In addition to the fees described in paragraph 25 (above), persons (except those assigned to AUTEC) traveling to/from Andros Island on official Government business are also charged a passage fee established by NUWC. The Contractor shall be prepared to accept payment for such fees in the form of personal checks, credit cards, and cash, and to issue an appropriate receipt. Fees collected shall be reported/credited to the Government as described in paragraph 25 (above).

27. Because it is NUWC's desire that the fixed wing air transportation services provided be as safe as practicable, the Contractor is encouraged to make recommendations on a case-basis concerning procedures, practices, avionics, etc., in excess of FAR 135 requirements, that might contribute to this goal.

28. The Contractor shall submit all NUWC-required technical and administrative reports, described in Chapter XXV of this Specification, as relate to fixed-wing Air Operations.

## D. WORKLOAD FACTORS

1. Passengers

a. The routine average total number of passengers, including Andros based personnel and dependents requiring travel for routine medical purposes, traveling daily between West Palm Beach, FL, and Andros Island is estimated to be as follows:

| Saturday - Thursday | Friday |
|---|---|
| 40 | 60 |

b. The routine average number of space-required passengers traveling daily between West Palm Beach, FL, and Andros Island is estimated to be 18. This average is exceeded approximately 21 days each month, estimated as follows:

| No. of Passengers | Occurrences per Month |
|---|---|
| 19 - 24 | 12 |
| 24 - 32 | 5 |
| 33 - 42 | 4 |

c. It is estimated that an average of two Range User passengers-only (or passenger plus cargo) special flights will be required each month.

2. Cargo

a. The average amount of cargo (baggage, mail, newspapers, other high-priority items) to be air-transported monthly between West Palm Beach, FL, and Andros Island is estimated to be: 22 tons.

b. It is estimated that an average of two Range User cargo-only special flights will be required each month, with a peak of five in any one month.

## E. KEY PERSONNEL/PERSONNEL QUALIFICATIONS

None.

## F. APPLICABLE DOCUMENTS

| | |
|---|---|
| 32 Code of Federal Regulations (CFR) Part | 861. Department of Defense Commercial Air Carrier Quality and Safety Review Program |
| 49 Code of Federal Regulations (CFR); | Part 830. DoT Regulations on Reporting of Aircraft Accidents, Incidents, Etc. |
| Federal Aviation Regulation (FAR); | Part 135 |
| DoDD 4500.53 (dtd 12/12/00); | Department of Defense (DoD) Commercial Air Transportation Quality and Safety Review Program |
| Other OCDs; | Relevant/Related OCDs as may be listed in Table XV-4 |
| APP 1-98G; | Mail Services - AUTEC Project |
| APP 2-109 G; | Air Evacuation: Medical Emergencies and Deaths |
| APP 4-18G; | Security and Boarding Procedures for Aircraft Passengers and Baggage |
| APP 7-8G; | Gasoline, Fuel Oils and Lubricants: Consumption and Control |
| APP 7-11G; | Use and Control of GSA and Navy-Owned Vehicles - AUTEC Project CONUS |
| APP 8-14G; | Fixed-Wing Passenger/Cargo Transportation |
| APP 8-32G; | Emergency Shipment of Handcarry Cargo on Sunday and Holiday Flights |
| APP 8-43G; | Additional Fixed-Wing Aircraft Flights for Official AUTEC Requirements |

| | |
|---|---|
| APP 11-4G; | Hurricane Plan, CONUS, AUTEC |
| APP 11-5G; | Hurricane Plan, Andros Ranges |

M&O Contractor's AUTEC Aviation Pre - Mishap Plan

FIXED-WING
AUTEC AIRCRAFT
ROUTINE FLIGHT SCHEDULE *

ANDROS-WEST PALM BEACH

| FLIGHT/DAY | RESERVATION CLOSING TIME | REPORT TO AIR OPERATIONS | CHECK-IN CLOSING TIME | BUS DEPARTS AIR OPS FOR AIRPORT | ARRIVE WPB |
|---|---|---|---|---|---|

- TO BE PROVIDED BY THE M & O CONTRACTOR-

WEST PALM BEACH - ANDROS

| FLIGHT/DAY | RESERVATION CLOSING TIME | REPORT TO AIR OPERATIONS | CHECK-IN CLOSING TIME | DEPARTS WPB | ARRIVE ANDROS |
|---|---|---|---|---|---|

- TO BE PROVIDED BY THE M & O CONTRACTOR-

* Departure time changes in accordance with EST/DST time phase to ensure ASD-WPB departure prior to sunset.

Table XIX-1

FIXED WING AIRCRAFT MAINTENANCE AND SUPPORT EQUIPMENT

| Equipment | Mfr. | Model No. | Quantity |
|---|---|---|---|
| Workstand, Aircraft | Tronair | 04-6001-1100 | 2 |
| Test Set, Navigation | IFR, Inc. | NAV-401L | 1 |
| Cleaner, Parts, Ultrasonic | L & R Mfg. | T7B | 1 |
| Fiberscope, Flexible | Machida | RH-150A5 | 1 |
| Tester, Pitot | Barfield | 1811FD(M) | 1 |
| Tractor, Aircraft Tow/Tug | Giliberti | - | 1 |
| | - - - - - *deleted* - - - - - | | |
| Power Unit, Ground | Hobart | 60G20P | 1 |
| Compressor, Air 30 HP | Ingersoll-Rand | 30 | 1 |
| Jack, Nose, 10,000 LB. | Tronair | 02-0526-0100 | 1 |
| Towbar | Tronair | - | 2 |
| Rectifier, 24 VDC | Hobart | GPU-400 | 2 |
| Test Set, Turbine | Barfield | TT 1000 A | 1 |
| Box, Breakout | Beechcraft | 114-380045 | 1 |
| Test Set, Fuel Quantity | Barfield | DC-400A | 1 |
| Washer, Engine Compressor | Tronair | 08-4049-1010 | 1 |
| Jack, Aircraft | Tronair | 02-0536-0100 | 3 |
| Servicer, Hydraulic Fluid | Tronair | 06-5010-6500 | 1 |
| Hand Tools/Miscellaneous Items | - | - | Various |

Table XIX-3

# XIX. AIR OPERATIONS (CONT.)

## 2. HELICOPTERS

### A. GENERAL

AUTEC's range facilities in the Tongue of the Ocean (TOTO), sites on Andros Island, and other locations within the Bahamas are widely separated as described in Chapters I of this Specification and in Section J, Attachment (2), of this Contract. Helicopters provide the most rapid means of transporting personnel and material between Site One, the downrange sites (2,3,4), and elsewhere within the Bahamas when warranted by the priority of an operation.

### B. DESCRIPTION

Helicopters are primarily used to support Range User test requirements on the AUTEC Andros Island ranges, predominantly for the launch and recovery of mobile targets and the recovery of expended exercise torpedoes and other test vehicles as described in Chapter IX(2) of this Specification. Similar support may occasionally be required at AUTEC's shallow water test sites in the Bahamas or off the coast of Florida. Helicopters may also be utilized as photographic platforms, tracking sensor targets, and to conduct XBT drops. Other support includes transfer of data to/from ships on-range and between sites, and personnel transfers between sites. Neither shipboard landings nor passenger transfers to/from ships or vessels are required/allowed to be performed under this contract.

Helicopters are also utilized to transfer AUTEC material, personnel, and/or visitors among the various downrange sites and, under high priority circumstances, occasionally to/from other locations in the Bahama Islands or CONUS as described in Chapter XXI(1) of this Specification. On occasion, helicopters may be required to participate in “good samaritan” operations such as searching for accident victims/missing persons or relief efforts subsequent to a natural disaster or other mishap/calamity.

Helicopter air transportation and operational support services provided under this Contract must comply with all of the requirements of Federal Aviation Administration (FAA) Regulations (e.g. FAR) Parts 135 and 133 as appropriate. Some requirements stated herein exceed those minimum requirements of FAR Parts 133 and 135, as it is NUWC's intention that the safest practicable service be provided. To transport DoD civilian/military personnel, their dependents, and DoD-owned cargo, as well as to perform operational support missions described herein, helicopter services provided under this Contract must additionally meet DoD Commercial Air Transportation Quality and Safety Program Review requirements established by the USAF Air Mobility Command Commercial Air Carrier Survey and Analysis Office (HQ AMC/DOB), in accordance with DoD Directive 4500.53 (Series) and as published in 32 CFR Part 861.

To support the aircraft provided by the Contractor, the Government furnishes all requisite tools, test equipment, and other related items. A representative list of such support equipment is provided in Table XIX-3. Actual inventory is as provided by NUWC.

DoD Directive 4500.53 stipulates that all single pilot/single engine rotary-wing aircraft services procured in support of DoD be limited to daylight hours and be under Visual Flight Rules (VFRs) only. NUWC has chosen to apply this same limitation to multi-engine/two pilot helicopter services stipulated herein. No flight operations are to be conducted above 10,000 feet.

Helicopters are to be based at Site 1 on Andros Island. Facilities provided by the Government include a heliport with four landing/take-off pads and eight ramp-parking spaces, a hangar with a 3K pound overhead crane and other work equipment, an aviation supply area, fresh water washdown accommodations, and ground power.

In addition to supporting helicopters provided under this Contract, the facilities at the heliport are made available to support visiting Range User helicopters as well as occasional transient U.S. Government helicopters and others operating in an official, government-sanctioned capacity.

AUTEC maintains various items of Range User-owned U.S. Navy aircraft Ground Support Equipment (GSE) (See also Chapter XX(3) of this Specification) primarily for use by visiting Range User helicopter squadrons.

## C. CONTRACTOR RESPONSIBILITIES

1. All aircraft provided by the Contractor must be listed on the Contractor's FAA Air Carrier Certificate, and flight crew members must be trained, qualified, and scheduled in accordance with Federal Aviation Regulations (FAR) Part 135 rules. This applies even when/if the contracted operations fall under FAR Part 91 or other FAR Parts. The Contractor shall provide, maintain, operate, schedule, and control the use of helicopter air transportation and operational support services and assets in accordance with the AUTEC Schedule of Operations, published Operations Directives, Workload Factors given in paragraph D, Applicable Documents cited in paragraph F, and other requirements stated below. Special requirements may be tasked by NUWC Work Order or Letter of Direction.

Rotary-wing aircraft operations will provide for one mission-capable helicopter to be manned and available during daylight hours up to 12 hours per day. A second helicopter will be provided, as a back-up, to ensure to the extent possible that one mission-capable aircraft is always available to support AUTEC requirements.

*- - - - - deleted - - - - -*

To the maximum extent possible, scheduled maintenance shall be conducted so as to maximize daylight availability of the aircraft.

2. The Contractor shall be fully responsible for obtaining and maintaining the currency of all certifications required by, and providing all rotary-wing aircraft services in compliance with, FAR Part 133 and FAR Part 135, for VFR and day-only operations, as well as those established by HQ AMC/DOB (see paragraph C.5 below).

3. The Contractor shall provide and maintain all external load lifting mechanisms, including the rescue hoist, rescue hoist cable, rescue hoist hook, external sling harness, and external slinghook. These mechanisms will be provided periodic weight testing and certification in accordance with any relevant OSHA or FAA approved standards. The Government will provide all external load mechanisms beyond the rescue hoist hook and sling hook, to include pendants, recovery cages, and launch devices.

4. In addition to other requirements, the rotary-wing aircraft provided under this contract must comply with the following specifications:

a. Be multi-engine, turbine powered, to be used in FAR Part 135 operations.

b. Meet airworthiness standards for Transport Category rotorcraft as defined under FAR Part 29.

c. Meet FAR Part 135 requirements for helicopter passenger carriage, and FAR Part 133 requirements for external load operations.

d. Be fully equipped with FAA instrumentation approved for day and night VFR as well as IFR operations in accordance with the performance requirements of FAR Part 135.181, and have on board a complete set of aeronautical charts, and approach plates, for each required pilot, covering the area of operation. Aircraft equipment will include (as a minimum):

(1) Directional Gyro.
(2) Artificial Horizon.
(3) Rate of Turn Indicator.
(4) Vertical Speed Indicator.
(5) LORAN or GPS.
(6) Emergency Locator Transmitter.

(7) Dual VHF Receivers and Transmitters.

(8) Two independent navigation systems, at least one of which includes VOR/DME capability.
(9) A Transponder.
(10) Air Speed Indicator.
(11) Altimeter.

e. The Second-in-Command position must include (as a minimum) the following operable equipment:.

(1) Suitable operating controls to manipulate all primary and auxiliary flight surfaces and landing gear.
(2) Air Speed Indicator.
(3) Altimeter.
(4) Artificial Horizon.
(5) Gyroscopic Direction Indicator or equivalent.
(6) An independent navigation system.

f. Have a passenger seating capacity of not less than 9 seats.

g. Have a self-contained passenger airstair door, and be equipped with a separate cargo hatch for access to cargo/freight.

h. Be equipped with appropriate internal cargo tiedown capability to permit flexibility with “COMBI” (passenger/cargo) operations.

i. Be configured with hardpoints and external sling capable of lifting 5000 lb.

j. Be configured with a rescue hoist, cable, and hook capable of lifting 600 lb.

k. Be equipped with either emergency (pop-out) or standard (fixed) helicopter flotation gear, approved for emergency water landing.

l. Be equipped, or be capable of being equipped, with wheels for ground handling.

m. Be configured with an internal intercom system (ICS) with an aft station for the crewman guiding external-load operations.

n. Be of such dimensions and/or collapsibility to be capable of being inserted into and removed from AUTEC's Site 1 helicopter hangar with only limited expenditure of labor and helicopter disassembly. Time required for disassembly/insertion and reassembly/removal shall not exceed 4 hours total.

o. Have a minimum ferry range of 300 nautical miles.

p. Be capable of sustained single engine operation in forward flight at maximum gross weight.

q. Meet each of the following performance requirements:

(1.) In a passenger configuration, lift a crew of three and a mixed passenger/cargo internal payload of 3000 pounds plus fuel, and fly 200 nautical miles, without refueling, with a 20 minute fuel reserve.

(2.) In an external load configuration, lift a crew of three, plus fuel, fly 50 nautical miles, enter a search/loiter for 10 minutes, pick up an external load of 4200 pounds, and return to original departure point, without refueling, with a 20 minute fuel reserve.

r. Be equipped with an AUTEC Radar Beacon as described in Chapter XII of this Specification. Such beacon will be provided by NUWC.

s. Be equipped with a weather radar.

t. Be equipped with main cabin temperature control equipment adequate to maintain passenger comfort in the AUTEC environment, and have on board first aid and emergency equipment, accessible to passengers and appropriate to the environment of operation. On board equipment for over water flights shall include life preservers in accordance with FAR Part 135.167 (a)(1).

u. Be equipped with a cockpit voice recorder.

5. All aircraft offered under this Contract will be made available for prior inspection and approval by the U.S. Navy. As required by DoDD 4500.53 (Series), the Contractor's air transportation and operational support services must meet the quality and safety inspection requirements established by the Air Mobility Command (AMC) Air Carrier Survey and Analysis Office (HQ AMC/DOB) and must be approved for DoD use (DoD personnel, their dependents and DoD-owned cargo are not allowed to utilize air transportation services, nor may DoD procure operational support services, that are not so approved). AMC-established air transportation and operational support quality and safety requirements and DoD approval are in addition to Federal Aviation (Administration) Regulation (FAR) requirements cited elsewhere in this Chapter. AMC field survey teams evaluate the Contractor's operational safety and maintenance programs, training program, proficiency standards, management, scheduling and dispatch practices, crew training/qualifications, maintenance facilities, crew/aircraft records, weight and balance program, aircraft inspection, quality control, etc., biennially, and will monitor ongoing operations. The FAA may be invited to participate in such inspections.

6. The Contractor shall ensure that on-board passenger facilities and comfort items as well as the appearance of the aircrew members and aircraft provided, are maintained as follows:

a. Cabin temperature must be controlled to provide reasonable comfort for passengers.

b. Cabin appointments, seats, fixtures, etc., must be maintained in a safe, clean, presentable condition. Holes, unmended tears, unsightly wear or appearance are unacceptable.

c. Floor coverings, if installed, must be maintained in a safe, clean, presentable condition. Holes, unmended tears, unsightly wear or appearance are unacceptable.

d. Prior to passenger embarkation, the cabin interior shall be serviced and any dirt or debris from the previous flight removed.

e. Each seat shall be equipped with a clean air-sickness container.

f. Aircraft will be maintained in a good state of repair and appearance. Aircraft will not show deterioration or neglect such as unrepaired cracks, loose rivets, missing fasteners, deterioration of paint or windows, etc. Decals and other cosmetic features shall be maintained in good condition. These requirements are in addition to airworthiness requirements.

g. All aircraft crew members shall wear clean, neat, distinctive uniforms and name tags during those occasions when transporting designated dignitaries. Uniforms shall be similar to those accepted/worn in the profession, but without corporate identity.

7. The Contractor shall develop, promulgate, and abide by regulations governing passage aboard rotary-wing aircraft provided under this contract. Such procedures shall be promulgated and included as part of APP 8-14G and shall be consistent with the provisions of the relevant APPs and other Applicable Documents cited in paragraph F.

8. The Contractor shall man and operate AUTEC's helicopter(s) with one Pilot-in-Command and one Second-in-Command Pilot. Normally, a third aircrew member will be provided who shall be responsible for directing the pilot during external sling load missions, supervising the passenger/ cargo onloading and offloading during logistics support missions, and performing other special tasks when deemed appropriate. Other non-crewmember flight personnel shall be provided only as warranted by the needs of specific operations.

9. Except where more stringently required by the provisions and regulations of FAR Part 135, the Contractor shall provide the following aircrew personnel, to include both a Pilot-in-Command and a Second-in-Command Pilot, whose minimum qualifications shall be as follows:

(a.) Pilot-in-Command - FAA Commercial Pilot Certificate with appropriate Category Rating, Class Rating, Type Rating, and Helicopter Instrument Rating, annual Second Class Medical Certificate, 2000 hours (100 hours of which shall have been logged within the last 12 calendar months) turbine engine-powered helicopter flight time as Pilot-in-Command, 500 hours flight time as Pilot-in-Command in helicopters of 10,000 pounds or more takeoff weight, and have at least 50 hours flight time and have made at least 10 takeoffs and 10 landings as Pilot-in-Command in the type helicopter (as defined in FAR Part 135.293(b)) being operated. New Pilot-in-Command candidates will

provide evidence of at least one year of demonstrated external sling load flying experience.

b. Second-in-Command Pilot - FAA Commercial Pilot Certificate with appropriate Category Rating, Class Rating, and Helicopter Instrument Rating, annual Second Class Medical Certificate, 1000 hours flight time as turbine engine-powered helicopter pilot, and 500 hours flight time as turbine engine-powered helicopter Pilot-in-Command.

c. All Pilots-in-Command and Second-in-Command Pilots shall meet Initial and Recurrent training requirements as required by FAR Part 135.293. The Pilot-in-Command and Second-in-Command Pilot shall have a total of at least 250 hours combined experience in their respective positions in the type helicopter being operated. The Pilot-in-Command's time as Second-in-Command shall not count toward this 250 hour requirement.

10. Mechanics provided under this Contract shall specifically have at least five years aircraft maintenance experience, two of which must have been maintaining turbine-engined helicopters, and shall be Airframe and Power Plant licensed by the FAA.

11. The Contractor shall provide ground support, in the form of crash-rescue (see also Chapter XXIV of this Specification) and refueling services, ground power (see also Chapter XX(3) of this Specification), etc., as may be requested by NUWC, to visiting Range Users and other transient aircraft, at the Site 1 heliport and at the Andros Town Airport. Such support will be limited to the capabilities of AUTEC's assigned ground support equipment. See also Chapter XX(3) of this Specification.

12. The Contractor shall develop, keep current, and be prepared to immediately implement a company-specific AUTEC Aviation Pre-Mishap Plan. The plan shall be comprehensive, and shall delineate individual responsibilities, specific actions, and procedures which are to be implemented and followed should a mishap occur, in the vicinity of Andros Island, which involves an aircraft provided under this contract, or any other aircraft.

13. The Contractor shall immediately notify NUWC, the Procuring Contracting Officer (PCO), and HQ AMC/DOB of any case where an aircraft performing services pursuant to this Contract is involved in an accident as defined by the Safety Investigation Regulations contained in 49 CFR Part 830. The Contractor is responsible for ensuring that the following information is transmitted by the most expeditious means available:

a. Carrier and trip number.
b. Aircraft type and number.
c. Date, time, and place of accident.
d. Point of departure/point of destination.
e. Other pertinent, amplifying information as is available.

Oral notification shall be followed by a formal report. The Contractor shall provide notification to civil authorities as required by law or regulation.

14. The Contractor shall develop and maintain an inventory of Government furnished consumables, expendables, and repair/spare parts to support AUTEC's helicopter operations in accordance with the policies provided in Chapter XXI (1) of this Specification.

15. The Contractor shall, as the situation allows, utilize the most economical source of aviation fuel, lubricants, etc., available. Those available at AUTEC’s Site 1 on Andros Island are provided under separate DoD contract. DoD Aviation Fuel Identaplates (DD 1896), for refueling off-site

at other U.S. military installations, and Aviation Into-plane Reimbursement (AIR) Cards, for refueling at commercial airport locations, will be made available by NUWC. AIR Cards may be used to purchase fuel, etc., from vendors under contract to the Defense Energy Support Center at DoD Standard Rates (established each Government fiscal year) as well as from non-contract vendors. If fuel is purchased commercially, the cost shall be a direct-cost reimbursable expense under this contract.

16. The Contractor must depart and re-enter CONUS through a "Port-of-Entry" in accordance with U.S. Customs and Immigration regulations. The Contractor shall similarly comply with all Commonwealth of the Bahamas Customs and Immigration regulations.

17. The Contractor shall arrange for any necessary landing rights and pay any applicable fees at any commercial airport at which the Contractor may be required to land in performance of this Contract. Such fees shall be direct-cost reimbursable expenses under this Contract.

18. The Contractor shall comply with all local regulations/directives which may pertain to the conduct of flight operations, and the conduct of personnel on the ground, in the event that the Contractor is required to land at a military facility.

19. Infrequent interruption of helicopter support services, due to mechanical problems, will be allowed. During any extended interruption, and when approved by NUWC, substitute helicopter air transportation services shall be procured by the Contractor. Such substitute services may be for air transportation and/or operational support except for the launch and recovery of mobile targets or for the recovery of expended exercise torpedoes or other test vehicles. Such substitute service must comply with all FAA regulations and DoD approvals applicable to the primary service.

20. The Contractor shall ensure that a flight plan, appropriate to the type of flight being flown, is prepared, submitted, and adhered to for all flights provided under this Contract. The Contractor shall additionally ensure that pilots compute and document the weight and balance for all flights, and ensure that the gross weight and center of gravity do not exceed the aircraft's limitations. Actual or interrogated weights must be used. Completed weight and balance forms, and other documentation for each flight, shall be retained on file for a minimum of 30 days in order to demonstrate compliance with the flight locating requirements of FAR Part 135.79.

21. The Contractor shall ensure that aircraft provided for operations in performance of this Contract are either owned by the Contractor or leased by the Contractor under such agreement as to ensure the Contractor's complete control over their use and their complete availability to support the requirements of this Contract. The Government may, with due consideration given to the time required for FAA approval and subsequent implementation, request modification(s) to and/or reconfiguration(s) of these aircraft in order to support special Range User/AUTEC test requirements. To the extent that ongoing FAR Parts 133 and 135 operational requirements would not be impacted, the Contractor shall make such modification(s)/reconfiguration(s) in accordance with current FAA airworthiness regulations.

22. Because it is NUWC's desire that the helicopter air transportation and operational support services provided be as safe as practicable, the Contractor is encouraged to make recommendations on a case-basis concerning procedures, practices, avionics, etc., in excess of FAR Parts 133 and 135 requirements, that might contribute to this goal.

23. Helicopters shall be used to perform inter-site/inter-facility logistics support (e.g., passenger, cargo movement, etc.) only upon approval of NUWC.

24. The Contractor shall submit all NUWC-required technical and administrative reports, described in Chapter XXV of this Specification, as relate to helicopter Air Operations.

## D. WORKLOAD FACTORS

1. The Contractor shall man and operate the helicopter(s), provided under this Contract, as required to support the AUTEC Schedule of Operations. Helicopter support will be required for operations during periods of Range Maintenance.

2. It is estimated that an average total of 65 flight hours per month will be required, with an estimated peak of 100 flight hours per month.

3. Support for Range User helicopters shall be available 24 hours per day, if operations are so scheduled, except during periods of Range Maintenance.

4. Support for other transient helicopters shall be available 24 hours per day, 365 days per year, with eight hours of pre-notification.

5. It is estimated that visiting Range User helicopters will average four squadrons per month, staying up to four days each, and that other transient helicopter (e.g. U.S. Coast Guard, U.S. Drug Enforcement Agency, U.S. Air Force, U.S. Customs Service, etc.) visits will average 15 units per month, staying less than one day each. Transient aircraft support requirements at the Andros Town Airport are not expected to exceed 1 aircraft (one day each) per month.

6. Workload for target launch and target/exercise weapon recovery support may be estimated based upon information presented in Chapters IV(1) and IX(2) of this Specification.

7. Workload for downrange site logistic support may be estimated based upon information presented in Chapter XXI(1) of this Specification.

## E. KEY PERSONNEL/PERSONNEL QUALIFICATIONS

None.

## F. APPLICABLE DOCUMENTS

| | |
|---|---|
| 32 Code of Federal Regulations (CFR) | Part 861. Department of Defense Commercial Air Carrier Quality and Safety Review Program |
| 49 Code of Federal Regulations (CFR); | Part 830. DoT Regulations on Reporting of Aircraft Accidents, Incidents, Etc. |
| Federal Aviation Regulations (FAR); | Parts 135 and 133 |
| DoDD 4500.53 (dtd 12/12/00); | Department of Defense (DoD) Commercial Air Transportation Quality and Safety Review Program |
| OCD-(19.2)-05-XX; | Rotary Wing Passenger/Cargo Transportation-Andros Island |
| OCD-(22.2)-04-XX; | Range Operations Environmental Mitigation Procedures |
| Other OCDs; | Relevant/Related OCDs as may be listed in Table XV-4 |
| APP 1-98G; | Mail Services - AUTEC Project |
| APP 1-103G | Downrange Visitor Control |
| APP 4-21G; | Mass Casualty Plan |
| APP 7-8G; | Gasoline, Fuel Oils and Lubricants; Consumption and Control |
| APP 7-10G; | Motor Vehicle Traffic Program |
| APP 8-27G; | Community Support Missions |
| APP 11-3G; | Fire Protection Policy |
| APP 11-5G; | Hurricane Plan, Andros Ranges |

AUTEC Hazardous Waste Management Plan

M&O Contractor's Aviation Pre-Mishap Plan

HELICOPTER MAINTENANCE SUPPORT EQUIPMENT

| Equipment | Mfr. | Model No. | Qty. |
|---|---|---|---|
| Power Unit, Ground | Trilectron | 90T400SLN-TRI | 1 |
| Compressor, Air | Portachamp | 20BV15PCD | 1 |
| Hoist, Aircraft Maintenance | P&H | - | 1 |
| | - - - - - *deleted* - - - - - | | |
| | - - - - - *deleted* - - - - - | | |
| Towbar | Tronair | 01-1185-0000 | 1 |
| Jack, Aircraft Hydraulic | Tronair | 02-0511-0132 | 1 |
| Jack, Aircraft 20,000# | Tronair | 02-1036-0100 | 2 |
| Washer, Engine Compressor | Tronair | 08-4049-1011 | 1 |
| Platform, Maintenance | Tronair | Various | 3 |
| Light Set, Aircraft | Fostori | PUL-1000Q-CA | 3 |
| Cleaner, Steam | Northeast | F200 | 1 |
| Tractor, Tow | Clark | CT50 | 1 |
| Servicer, Hydraulic Fluid | Tronair | 06-5010-6500 | 1 |
| Charger, Battery, Aircraft | Utah | 30003 | 1 |
| Unit, Lubricating, Mobile | - | - | 1 |
| Adapter, Splined | Sikorski | S617 0-35062-1 | 1 |
| Adapter, Wrench | Sikorski | S6170-35105-1 | 1 |
| Washer, Parts Electric | Graymil | 500-R | 1 |
| Sling, Hoisting | Sikorski | S6170-70004-9 | 1 |
| | - - - - - *deleted* - - - - - | | |
| Kit, Balancer/Analyzer | Chadwick | 11270-1 | 1 |
| Unit, Checking and Filling | Sikorski | S6170-15000-25 | 1 |
| Hand Tools/Miscellaneous Items | - | - | Various |

Table XIX-3

# IV. TEST OPERATIONS AND CUSTOMER SUPPORT

## 1. TEST OPERATIONS PLANNING AND RANGE OPERATIONS CONTROL

### A. GENERAL

AUTEC exists solely on its ability to attract and retain customers, most of whom have the option of taking their test programs elsewhere. Customer satisfaction is thus AUTEC's primary goal, and is directly related to AUTEC's ability to meet Range User test requirements in a thorough, professional, and cost effective manner. Successful test execution requires that all cognizant personnel know and understand what must be done, and when and where their services are required. Tests conducted on AUTEC's Weapon Range are controlled and directed from the Real Time Display Centers (RTDCs) located in the Command Control Building (CCB) located at Site 1 on Andros Island. Using track information generated and displayed using the AUTEC Real-Time Graphic On-Line System (ARGOS) host computers, the movement of participating and non-participating units is monitored, and test vessel/aircraft movements directed in order to assure that test objectives are met in a safe, timely, and efficient manner. For operational requirements that necessitate the range be divided into two or more areas for concurrent testing, a standing line of division is located at gridline "Lat 24 degrees 29 minutes North. The tracking area to the north of the division is referred to as Weapons Range North (WRN), while tracking area to the south of this division is referred to as Weapons Range South (WRS). See also chapter II paragraph (1) of this Specification. Tests conducted using AUTEC's Portable Tracking System (PTS) (see also Chapter III (3) of this Specification) are conducted/controlled in a similar fashion.

Even when test operations are not being conducted, the routine movement of vessels and aircraft must be monitored and controlled in order to assure that logistic services can be coordinated, emergent situations responded to, etc. To accomplish this, AUTEC operates an around-the-clock Operations Control Center (OCC), also located in the CCB.

### B. DESCRIPTION

PLANNING

AUTEC customers are categorized as "Range Users" regardless of whether their test or program is conducted or supported on one of AUTEC's Andros ranges or controlled Op Areas, at one of AUTEC's land-based sites or facilities, in the open ocean, or elsewhere. A Range User may be a U.S. Department of Defense (DoD) or foreign military organization, activity, or command, other U.S. or foreign government agency, or a commercial company.

Planning for routine test operations normally begins with distribution of the AUTEC Quarterly Test Schedule resulting from the quarterly CINCLANTFLT Scheduling Conference. The AUTEC Quarterly Test Schedule, and related test Work Orders (see also Chapter I of this Specification), will

be provided by NUWC approximately two months prior to the beginning of each Government fiscal quarter. NUWC will provide notification to the Contractor in writing

approximately two months prior to the beginning of each Government fiscal quarter. NUWC will provide notification to the Contractor in adequate time to allow planning for those occasional complex or unusual tests which require unique or long lead time engineering, software, design/fabrication, purchase order requisition, or other technical/logistic support.

Once promulgated, test schedules fluctuate for numerous reasons. Fleet operating tempo, commitment or priority changes, etc. all affect AUTEC's Quarterly Test Schedule. Such changes may be expected daily, and may change actual test requirements. Test Planning must be flexible and responsive to all such revisions.

A NUWCDETAUTEC (Code 7006) Test Program Manager will be assigned as the primary point of contact for each prospective/actual Range Users. Once Range User requirements are defined and approved, the assigned Test Program Manager will coordinate these requirements with the Contractor's assigned Test Planning Engineer. The Contractor's Test Planning Engineer will then prepare, and electronically distribute, an Operations Directive (OD) on the AUTEC Local Area Network (see also Chapter VI(3) of this Specification). Every attempt shall be made to distribute each OD a minimum of four weeks in advance of the test start date; occasionally, an emergent test may need to be added to the schedule with less than four weeks notice. Each OD will be electronically updated to reflect additions, deletions, or changes to Range User requirements as they are received.

The NUWC Work Order, in conjunction with the OD, constitute the formal request by NUWC for the Contractor to support a specific test operation. Test planning documents are further described below:

Operations Directives (ODs):

The OD will contain detailed information describing the test objective(s); security classification(s); technical test procedures; run geometries (if appropriate); governing/reference documents; data gathering, processing, and product distribution requirements; facilities, assets, and personnel support needed; finite time schedules; communications; logistics support; etc. In brief, the OD contains everything necessary to develop plans for execution of the scheduled test. The OD will be located, and available to all cognizant personnel, on the AUTEC Local Area Network (LAN) file server.

Test Plans:

Test Plans are prepared and distributed by the Contractor for tests/programs of an on-going or repetitive nature. Test plans are numbered for reference purposes, and retained on file for

redistribution when required. Test Plans contain much the same information as an individual OD, with the exception of specific dates, times, etc. Each time a test is scheduled, the appropriate Test Plan will be referenced, appropriate information extracted, and specific test requirements incorporated in the requisite OD, thus avoiding repetitious effort to the maximum extent possible. Test Plans will similarly be located and available on the AUTEC LAN file server.

Special Test Instructions (STIs):

These instructions are for the purpose of promulgating detailed procedures for unique test support requirements cited in an Operations Directive. Such procedures will be prepared by the Contractor's Test Planning and/or test support personnel responsible for performing the requirement. STIs are to be distributed to cognizant Contractor personnel, and to the assigned NUWCDETAUTEC Test Program Manager for review. Distribution shall be via the AUTEC LAN.

Subsequent to the distribution of the planning document(s), pretest briefings are held for cognizant personnel, to ensure that no aspect of the test has been overlooked in the planning process and that no requirements are misunderstood. Post-test critiques are held to assess the success of each test, and to provide feedback for improving the planning process.

EXECUTION

Real Time Display Centers

Test Operations conducted on AUTEC's Weapon Range are controlled from AUTEC's Real Time Display Centers (RTDCs), where in-water and in-air track data is displayed. Two RTDCs (Nos. 1 and 2) are located in the CCB at Site 1 on Andros Island (see Figure IV-1). A small display center, RTDC No. 3, connected via real-time data link, is remotely located in AUTEC's Headquarters facility in West Palm Beach, FL. RTDCs are equipped with communications equipment, as well as with various workstations and large screen displays driven by the ARGOS Host Computer System(s). These workstations (see also Chapter VI(2) of this Specification) are used by the Contractor's Test Conductors and Controllers, and the U.S. Navy Range Safety Watch Officer, to monitor/control real-time test events. All displays are integrated with Autec's classified Network (see also Chapter VI(3) of this Specification) for optimum flexibility in both real-time and post-test data display, recording,

and processing. Real-time data can also be linked to various Range User facilities in CONUS. Two 36 inch plotters are interfaced to the network for generating real-time "snapshots" and for producing finished run plots (post-test). A Weapons Range Surface Surveillance/Weather radar is located at Site 2. Radar video can be digitized, and remotely displayed in each RTDC (see Figure IV-2) for limited weather monitoring and to support various engineering tests.

ARGOS Host Computers:

All Weapons Range instrumentation data are transmitted to Site 1 via cable or microwave where they are received by SGI Power Series Host Computers(s) (PS1 and PS2) (see also Chapters V and VI(2) of this Specification) through the Data Distribution System. In-water and in-air raw data word are processed in real-time to establish target track, then broadcast on the classified network for display purposes. Data are stored on digital magnetic media for post-test processing.

Underwater Instrumentation Control Workstation:

Operation of the Weapons Range in-water tracking system is performed using an SGI Workstation. Initially, the ARGOS host computer must be told which hydrophone arrays are nearest each object to be tracked. This information is manually entered into the computer from the workstation. In addition, the controller must input pulse frequency, pulse repetition rate and pulse type for each object prior to each exercise. Any of these parameters may be changed during an operation. AUTEC's in-water tracking area may be divided into two distinct areas allowing dual concurrent tests to be conducted. Dual testing shall be monitored from the same workstation.

Radar Instrumentation Control Workstation:

Monitoring of Weapons Range track radar data quality and coordination/selection/control of downrange radar operations during test operations is controlled using an SGI workstation. Results of both pre and post-test radar checkouts and calibrations, required for each exercise, are monitored from the same workstation.

OPERATIONS CONTROL CENTER

AUTEC's Operations Control Center, located in the CCB at Site 1 on Andros Island, provides a focal point for the coordination of all of AUTEC's range activities, rendezvous and range logistic support, and the movement of vessels and aircraft. Personnel in the Operations Control Center complement the efforts of personnel in the Real Time Display Center(s) during test operations.

This chapter addresses the support required to plan, schedule, and execute test operations, and to control activities on AUTEC's ranges. Maintenance and life-cycle management of equipment/systems which support these functions are addressed in other chapters of this Specification.

## C. CONTRACTOR RESPONSIBILITIES

1. The Contractor shall provide test operations planning, asset scheduling, test conduct, and operations control support services in accordance with the AUTEC Quarterly Test Schedule promulgated by CINCLANTFLT, requirements contained in Operations Directives (ODs), Work Orders, and Letters of Direction provided by NUWC, Workload Factors given in paragraph D, Applicable Documents cited in paragraph F, and other requirements stated below.

2. The Contractor shall provide Test Planning Engineers to interface with/provide support to/and be the point-of-contact for NUWCDETAUTEC Test Program Managers in matters relating to the planning, asset and personnel scheduling, and execution of all tests/programs. Assigned personnel shall have the expertise necessary to translate Range User needs and develop Operations Directives or other documents requested by NUWC. The Test Planning Engineers will evaluate actual test support requirements, and determine the best method(s) for accomplishing all aspects of each test/program. Specifically, they shall be capable of matching test support, data collection, data processing, and data analysis requirements with existing AUTEC capabilities in order to satisfy specific customer needs or of defining new capabilities or additional resources, if such are required. Once assigned to a specific test/program, the Test Planning Engineer shall follow it to completion. Assigned personnel

shall schedule/commit Contractor assets/other Contractor personnel, and Contractor controlled AUTEC resources needed to support AUTEC's test workload, and shall be responsible for coordinating/assuring that such commitments are met. Tasks/responsibilities include:

a. For each test identify what/when/where specific test assets and other requisite support will be needed to meet Range User requirements, and generate an Operations Directive that describes test objective(s), security, classification requirements, technical test procedures, data requirements, time schedules, etc. All routine and unique pre-test, real-time, and post-test requirements will be addressed, including environmental impact mitigation, monitoring, and record keeping requirements of OCD-(22.2)-04-XX for the protection of marine mammals in the AUTEC operations areas. See also Chapter XXII(2) of this Specification.

b. Develop, maintain, and promulgate the AUTEC Schedule of Operations as approved by NUWC. Update the schedule daily (or as needed) to reflect on-going changes in Range User schedules/requirements as provided by NUWC.

c. As required develop, promulgate, and maintain Special Test Instructions (STIs).

d. As required develop, promulgate, and maintain Test Plans for on-going or long-term test programs.

e. Communicate specific test support requirements and schedules to all cognizant groups within the Contractor's internal organization. Perform on-going liaison with such groups as required to ensure readiness to execute all scheduled test support operations and functions.

f. As required, arrange for/coordinate all pre and post-test logistic support functions specified by the OD. Submit and track required Purchase Orders/requisitions. Arrange for: any necessary shore facility or other test asset preparation/modification; the proper staging, of any Range User materials/equipment shipped to AUTEC, at the specified test site; the proper handling, accounting, and disposal of any HAZMAT/HAZWASTE in accordance with requirements cited in Chapter XXII(2) of this

Specification. Upon test/program completion, ensure all Range User materials/equipment are returned and that all AUTEC assets/facilities are restored to their original condition unless otherwise directed by NUWC.

3. The Contractor shall provide a qualified Test Conductor to support Real Time Display Center functions whenever a test or operation is scheduled to be conducted on AUTEC's Weapons Range (see also Chapter II (1) of this Specification). A qualified Test Conductor is also required to support tests and operations involving AUTEC's Portable Tracking System (see also Chapter III (3) of this Specification). Assigned individuals are responsible for ensuring that all test objectives and data requirements, established by the relevant OD, are met. Specific Test Conductor duties and responsibilities are as stated in OCD-(04.1)-07-XX, and include:

a. Being thoroughly familiar with all requirements of the OD(s), Test Plan(s), etc. for specific test(s) being conducted.

b. Assuring that all AUTEC range instrumentation and other required test support assets are ready for scheduled test COMEX.

c. Establishing and maintaining all required communications links.

d. Controlling the movement of participating range vessels and aircraft.

e. Providing guidance/direction to assigned data, target, and instrumentation controllers, and technical assistance to the U.S. Navy Range Safety Officer.

f. Maintaining a chronological log of all events that take place during each test operation.

4. As part of the pre-test planning and preparation task, Contractor Test Planning and/or technical personnel may occasionally be required to attend and participate in technical meetings, planning conferences, and pre-sail briefings at locations other than Andros Island or West Palm Beach, FL. Similarly, Test Planning representation may occasionally be required CONUS to support/coordinate test preparations. Such requirements are normally limited to/associated with complex special

project/RDT&E test programs.

5. The Contractor shall routinely conduct pre-test briefings for cognizant Contractor, NUWC, Range User, and other personnel as may be required, to ensure individual/organizational, readiness to meet all requirements of each test. The Contractor shall similarly conduct a post-test debriefing of all personnel concerned to identify any deficiencies in the planning and/or execution of each test.

6. The Contractor shall assure that extraneous range vessel and aircraft movements, and local RF emissions are controlled, or precluded, during acoustic tests and FORACS/Sensor Accuracy Tests as may be required to minimize acoustic and/or RF interference.

7. The Contractor shall provide other qualified persons to support Real Time Display Center functions as follows:

a. Data Controller. Duties, responsibilities, and qualifications are as described in Chapter V of this Specification.

b. MK-30 Target Controller. Duties, responsibilities, and qualifications are as described in Chapter VIII of this Specification.

c. In-Water Controller. Specific duties, responsibilities, and qualifications are as described in OCD-(04.1)-08-XX.

d. In-Air Controller. Specific duties, responsibilities, and qualifications are as described in OCD-(04.1)-10-XX.

8. The Contractor shall provide a training and certification program for all personnel assigned Test Conductor/Controller responsibilities, in accordance with requirements contained in OCD-(04.1)-06-XX. The Contractor shall maintain a record of all such training and certifications received by each individual. Personnel who have not been so certified shall not be permitted to conduct operations without supervision.

9. The Contractor shall provide assistance to the U.S. Navy Range Safety Watch Officer in the implementation and

enforcement of Range Safety measures. All assigned Test Conductor/Controller personnel shall read and be responsible for understanding the information listed in Table IV-1. During test operations, assigned personnel shall assist in monitoring and recording the location and activities of vessels, aircraft, targets, exercise weapons, etc., participating in test activities, as well as any non-participating vessels or aircraft that may interfere with range operations. The Contractor shall ensure compliance with weapon safety cones for all test exercises involving in-air weapons.

10. The Contractor shall prepare and submit the following reports:

a. Engineering Discrepancy Reports for documenting problems or failures which resulted in loss or degradation of data; in accordance with OCD-(04.1)-14-XX.

b. Daily Situation Reports (SITREP) briefly describing events occurring during each test conducted, in accordance with OCD-(04.1)-16-XX.

c. Range Resources Utilization Reports for documenting the usage of AUTEC's test support resources, in accordance with OCD-(04.1)-20-XX.

d. Discrepancy Inquiry Reports for any range equipment or support service problem which necessitated an OD or Test Plan deviation, in accordance with OCD-(04.1)-28-XX.

e. Test Summary Reports synopsizing all events, happenings, discrepancies, etc., as occurred during the planning, conduct, and post-test phases of each test, in accordance with OCD-(04.1)-16-XX. A report shall be submitted electronically within five working days subsequent to completion of each test. The Contractor shall retain each such report for a period of one year.

11. The Contractor shall collect data and maintain records of any exercise weapons, test vehicles, or mobile targets lost/sunk during range operations, and their subsequent recovery, if applicable, in accordance with requirements contained in OCD-(04.1)-23-XX.

12. The Contractor shall organize in such manner as to allow prompt response to, and accommodation of, real-time: test delays; problems; schedule changes and changes in Range User test/test support requirements; inter-range of inter-asset changes; etc. as may be required to utilize AUTEC's resources most effectively/efficiently.

13. The Contractor shall provide an Operations Control Center (OCC) coordinator, who shall be the single point-of-contact for NUWC, and other Contractor personnel, regarding control/coordination of, as well as any information concerning, the usage, scheduling, employment, status, or condition of AUTEC's range and other test support assets and logistic support services. This person, assisted by others, shall be responsible for performing the OCC functions delineated in OCD-(04.1)-04-XX, including:

a. Coordinating: the movement of mobile targets and weapons; scheduled/emergent rendezvous for the transfer of personnel and data; downrange logistic support by vessels and aircraft, medical evacuations; emergent situation response activities; the movement of range vessels and aircraft, etc.

b. Performing briefings and maintaining records.

c. When tests/operations are scheduled on AUTEC's ranges, be the point-of-contact for go/no-go decisions regarding: vessels; aircraft; communications; timing; computer; targets; and other scheduled support services.

14. The Contractor shall manage and coordinate the use of all AUTEC resources required to meet established test objectives and ensure efficient use of AUTEC test time. The Contractor shall direct operations and support test programs in compliance with documented requirements for each test. The Contractor shall plan and subsequent to approval by the assigned NUWC Test Program Manager, be prepared to expeditiously implement, alternate methods of satisfying test requirements in the event of a failure in range equipment or other AUTEC asset.

15. The Contractor shall support all internal AUTEC-required tests in the same manner as described above for Range User tests/programs.

16. As requested by NUWC, the Contractor shall prepare and promulgate updates and revisions to the AUTEC Quarterly Test Schedule using Naval message format.

17. The Contractor shall continually review and update AUTEC internal test procedures, operating techniques, and other relevant test support documentation. The Contractor shall, as warranted, develop and submit recommended changes/improvements to NUWC for approval.

18. The Contractor is encouraged to cross-utilize personnel assigned as Test Planning Engineers and those assigned as Test Conductors.

19. The Contractor shall ensure that all costs incurred to support each specific test/program are charged to the appropriate Work Order provided by NUWC (see also Chapter I of this Specification). Prior to exceeding any established, estimated costs for a specific test/program, the Contractor shall obtain approval from NUWC.

20. The Contractor shall be responsible for following appropriate security guidelines for classification, identification, marking, and safeguarding of classified materials, documents, messages, etc. as dictated by the subject matter. The Contractor shall maintain accurate records for accountability purposes. Specific requirements, including administrative, operational, physical, and personnel controls are set forth in Chapter XXIII of this Specification, and the current DoD Contract Security Classification Specification (DD Form 254) as appearing in Section J, Attachment (8), of this Contract.

21. The Contractor shall prepare and submit all NUWC-required technical and administrative reports, described in Chapter XXV of this Specification, as pertain to support of AUTEC's Test Planning and Range Operations Control function.

## D. WORKLOAD FACTORS

1. GENERAL: Test operations workload varies significantly from month to month. As is possible, AUTEC's support of customer range test operations is scheduled Monday through Saturday (holidays excluded), 46 weeks

per year. Testing does occur on approximately 50% of the Sundays during months of both average and peak operations tempo. Conversely, no operations are typically scheduled during approximately 30% of these days. See also Chapter II (1) of this Specification for radar tracking exceptions to this schedule. The Contractor will generate/distribute/update Operations Directives (ODs) and provide other requisite pre-test planning support needed to assure that Range User requirements are met efficiently and effectively. In the event scheduled test requirements exceed the workload factors, government personnel may be used to augment control room staffing. Estimated test workload is quantified in the paragraphs below:

**a. Ranges WR, WRN, WRS:**

1. Range data acquisition workload is defined in terms of data acquisition hours (DAHs). Data acquisition hours encompass those periods of time, commencing when AUTEC is manned and ready, during which track data is acquired in support of an on-range test using any combination of in-water/in-air instrumentation systems. During a single clock hour, one or more on-range tests may be conducted. Data acquisition hours are accumulated separately for each individual test. Data acquisition hours include the time from manned and ready (nominally one hour prior to COMEX) until equipment is secured subsequent to a test, but do not include the time required for pre-test calibration/check-out. See OCD-(04.1)-20-XX.

   Total range data acquisition hours: Approximately 4,000/year.

2. Prior to commencing a range operations period, pre-test calibration/check-out of range instrumentation systems is required. These functions take approximately 1 to 1 ½ hours prior to manned and ready. Upon completion of operations, range instrumentation systems must be secured. These functions require approximately one hour. See also Chapter II (1) of this Specification.

3. Normally, one Real Time Display Center (RTDC) is required to be manned for each range area when independent test operations are being conducted there.

- - - - - - *deleted* - - - - - -

4. As noted above, test operations workload varies significantly from month to month. During periods of average operations tempo, typically one RTDC is required for test operations support for up to 12 DAHs per day. Intermittently during such periods of average operations workload, increased operations tempo will require additional RTDC support for limited periods of ftime. Such increased operations tempo may require either use of one RTDC for up to 24 DAHs per day, or two RTDCs simultaneously for up to 9 DAHs each per day, for up to five consecutive days. Such periods of increased operations tempo shall be identified and scheduled at least 14 days in advance of the requirement. It is estimated that average operations tempo will apply 10 months per year, and, that during such times, periods of increased operations tempo may occur once every 30 days.

5. Peak test operations periods, which require additional RTDC support for up to 30 days at a time, are estimated to occur twice per year. Such peak operations workload periods may require use of one RTDC for up to 24 DAHs per day, plus a simultaneous requirement for support of a second RTDC for up to 9 DAHs per day, for all or a majority of the days involved. Such periods of peak operations workload shall be identified and scheduled at least six months in advance of the requirement. Any such peak workload period shall be both preceded and followed by periods of at least seven days duration wherein support of only one RTDC, for up to 9 DAHs per day, may be required. In the event that two periods of peak operations workload are required to be scheduled with a separation of 90 days or fewer, there will be at least one seven day contiguous period scheduled wherein no operations support is required.

6. In-water data acquisition hours, by range, are estimated as follows:

| RANGE | **Estimated Monthly Data Acquisition Hours** | |
|---|---|---|
| | Average: 10 months/year | Peak: 2 months/year |
| WR* | 236 hours per month (varying between 10 and 300) | |
| WRN and WRS | 48 | 120 |

* Only one RTDC is required.

7. Test duration:

| Data Acquisition Hours | Avg. % of All Tests |
|---|---|
| 0-8 | 73 |
| 8-9 | 3 |
| 9-12 | 13 |
| 12-24 | 10 |
| 24+ | 1 |

8. Monthly estimated usage of other range instrumentation systems is presented in Chapter II(1).

9. Typical test types:

(a) ASW Tactics: ASW tactics evaluations and practice exercises are conducted by various Fleet platforms (submarine, surface ship, helo or fixed-wing aircraft). The number of test scenarios scheduled for any test platform(s) is dependent on the number of weapons or type of test being conducted. Workload estimates are as follows:

- Submarine MK-48/MK-48 ADCAP Certifications/Proficiencies/Command qualifications: An average of 50 tests (12 hours/test) will be conducted per year. (Test Plan Nos. 232/233/355/063WXXX apply).

  - - - - - - *deleted* - - - - - -

- Surface ship TORPEX/ASW Training Exercises (MK-46 EXTORP/REXTORP, MK-50 EXTORP/REXTORP, MK-54 EXTORP, UK STRINGRAY Torpedoes): An average of 20 tests (12 hours per test) will be conducted per year. (Test Plan Nos. 027/046/047WXXX apply).

- Helo and Fixed-Wing AIREM and TORPEX events (MK-46 EXTORP/REXTORP, MK-50 EXTORP/REXTORP, UK STINGRAY Torpedoes): An average of 40 AIREM tests (6 hours each), and 300 TORPEX tests (3 hours

each) will be conducted per year. (Test Plans Nos. 139/178/183/356/162/409/304/221/30/471WXX apply).

(b) Weapon System Accuracy Trials (WSATs)/Combat System Ship Qualification Trials (CSSQTs): Tests usually conclude with weapon system certification/qualification and include both Sensor Accuracy Tests and the launching of weapons (MK48/MK48 ADCAP EXTORP, MK50 EXTORP/REXTORP, MK46 EXTORP/REXTORP), MK-54 ExTORP. An average of 12 tests (18 hours each) and 12 tests (4 hours each) will be conducted each year. (Test Plan Nos. 001/031/141/093WXXX and ECHO, JULIET, LIMA apply).

(c) Submarine Sensor Accuracy Tests (e.g. FORACS): An average of 10 tests (one to five 12 to 16 hour range days per test) will be conducted per year. Dockside testing will normally be done CONUS (east coast) and will require one to three 8 hour days. See also Chapter II(3) of this Specification. (Test Plan FORACS applies).

(d) Development/Evaluation Testing: Developmental/Evaluation testing of weapons/combat systems and component subsystems and other devices usually employ restricted geometries, and thus are rigorously controlled events. An average of 30 tests (three 8 hour periods per test) will be conducted each year. (Test Plan Nos. 005/008/101/102/147/211/279WXXX apply).

(e) Armed Helicopter Testing: An average of 4 tests (five 12 hour range days per

test) will be conducted each year. Tests may involve use of live fire, inert warhead AGM-114B Hellfire missiles. (Test Plan nos. 122/123WXXX apply)

**b. <u>FORACS RANGE (Surface Ship/Helicopter Testing):</u>**

Normally 16 FORACS Range tests will be

conducted each year; typically 1 to 2 tests or 28 hours of total FORACS range testing, per month. Peak months may have three FORACS tests for 42 hours of total range testing. A typical test day on the FORACS range will last 12 to 16 hours. Dockside testing will normally be done CONUS (east coast) or in the Bahamas, and will require two 8 hour days. FORACS Range and FORACS dockside support will not be scheduled concurrently. FORACS/Sensor Accuracy Tests on the Weapons and FORACS Ranges will not be scheduled concurrently. See also Chapter II(3) of this Specification. (Test Plan FORACS applies).

**c.** ***- - - - - - deleted - - - - - -***

**d.** **SHALLOW WATER TEST SITES:**

Shallow water test sites presently include areas off Key West, and Ft. Pierce, FL, and in the Berry Islands, BA. Typical test duration is 3-7 days, and support requirements will vary depending on the type of test, tracking systems involved, and marine/helo support platforms required. These sites will normally be used to support weapons and sonar systems testing. An average of four tests per year will be scheduled. (No standard Test Plan applies)

**e.** **OPEN OCEAN TESTING:**

Open-ocean testing is usually conducted, using one vessel, in the mid-Atlantic area, or in the waters surrounding the Bahamas. Typical test duration is 3-30 (underway) days, normally for the purpose of supporting towed array, sonar, or weapons testing, or general oceanographic research. Occasionally such tests may require two vessels. An average of 10 tests per year will be scheduled.

**f. ACOUSTIC TESTING:**

Acoustic testing, whether at Site 1 or other location, will be conducted utilizing test assets described in Chapter II(2) of this Specification. Test support requirements are: DNM (four tests, requiring three 12 hour days, per year); other systems (total 24 tests, requiring 12 hours each, per year).

**g. PORTABLE TRACKING SYSTEM:**

Workload estimates are provided in Chapter III (3) of this Specification.

2. Maintenance/daily updating of the AUTEC Schedule of Operations, and general scheduling-office support, shall be performed during normal working hours at AUTEC's West Palm Beach Headquarters. Near real-time changes to the AUTEC Schedule of Operations will be processed through Operations Control on Andros Island as required.

3. Travel: Pre-test planning support will require occasional travel to locations other than West Palm Beach, FL, or ANDROS Island. An average of two, two day trips per month is estimated to various ports or facilities on the east coast of the U.S. and Canada. Two to three trips per year to England, for one week planning sessions, are estimated for support of United Kingdom (UK) trials.

4. The Contractor shall maintain a watch in the Operations Control Center 24 hours per day, 365 days per year.

5. A Test Conductor and Data Controller are required to man the Real Time Display Centers whenever a test is scheduled which requires use of a RTDC (see above).

6. In-Air, In-Water, and MK-30 Target Controllers are required to man the Real Time Display Centers only when use of the track radar(s), the in-water system(s), or MK-30 Target(s), respectively, are required for a scheduled test (see above).

7. The remote display center at AUTEC's West Palm Beach, FL, Headquarters facility will be utilized approximately six times per year (8 hours per event).

## E. KEY PERSONNEL/PERSONNEL QUALIFICATIONS

1. Key Personnel: None.

2. Personnel Qualifications:

a. Test Planning Engineers To successfully execute the responsibilities and tasks described, personnel assigned as Test Planning Engineers should as a minimum:

1. Have a BS Degree in Electrical, Electronic, Ocean or other Engineering discipline, or a Physical Science, and five years experience and progressive responsibility in planning/conducting large scale test programs, preferably in a test range environment, or in lieu of a degree, have 10 years experience in a test range environment with five years in a technical or test system supervisory capacity with responsibility for planning/conducting large scale test programs.

2. Have experience with, and good knowledge of:

(a) In-water acoustic tracking systems.

(b) Radar tracking systems.

(c) Communications systems.

(d) Physical oceanography.

(e) Data processing.

(f) Performance characteristics of U.S. Navy ships, submarines, aircraft, ASW/ASUW/Strike Warfare weapons and weapons systems.

(g) Acoustic countermeasures, and ASW targets.

(h) EMR theory and hazards.

3. Possess excellent oral and written communications skills.

b. Test Conductors To successfully execute the responsibilities and tasks described, individuals assigned as Test Conductors should as a minimum:

1. Have a BS Degree in Engineering, or a Physical Science, and five years experience and progressive responsibility in planning/coordinating/directing/conducting large scale test programs, preferably in a test range environment or, in lieu of a degree, have 10 years experience in a test range environment with five years in a technical or test instrumentation system supervisory capacity with responsibility for planning/coordinating/directing/conducting large scale test programs.

2. Have experience with, and good knowledge of:

(a) In-water acoustic tracking systems.

(b) Radar tracking systems.

(c) U.S. Navy voice communications systems protocol and terminology.

(d) Performance characteristics of U.S. Navy ships, submarines, and aircraft, ASW/ASUW/Strike Warfare weapons and weapons systems.

(e) Computer display systems.

(f) Performance characteristics of U.S. Navy acoustic countermeasures, and MK-30 mobile targets.

3. Possess excellent oral and written communications skills.

## F. APPLICABLE DOCUMENTS

| | |
|---|---|
| NUWCDIVNPTNST 5100.6 (SERIES); | AUTEC Range Safety Manual |
| OCD-(04.1)-02-XX; | Range User Helo and Range User Building One (RUH/RUB1) |
| OCD-(04.1)-04-XX; | Operations Control Center Coordinator |
| OCD-(04.1)-05-XX; | Real-Time Log Keeping |
| OCD-(04.1)-06-XX; | ARGOS Real Time Controller Training/Qualifications Program |
| OCD-(04.1)-07-XX; | Test Conductor - Weapons Range |
| OCD-(04.1)-08-XX; | In-Water Control Console Checkout and Operation |
| OCD-(04.1)-10-XX; | Radar Controller's Console Operation |
| OCD-(04.1)-14-XX; | Engineering Discrepancy Reports |
| OCD-(04.1)-16-XX; | Daily Sitrep Reporting System |
| OCD-(04.1)-20-XX; | Range Resources Utilization Reporting |
| OCD-(04.1)-23-XX; | Lost and Recovered Objects Files |
| OCD-(04.1)-26-XX; | Emergency Operations Reaction Plan |
| OCD-(04.1)-28-XX; | Discrepancy Reporting System |
| OCD-(04.1)-41-XX; | Test Planning Documentation and Style Guide for Weapons Range Tests |

| | |
|---|---|
| OCD-(04.1)-43-XX; | AUTEC Scheduling System Controls and Procedures |
| OCD-(04.1)-52-XX; | AUTEC At Sea Personnel and Equipment Transfers |
| OCD-(22.2)-04-XX; | Range Operations Environmental Mitigation Procedures |
| Other OCDs; | Relevant/Related OCDs as may be listed in Table XV-4 |
| APP 2-109G; | Air Evacuations: Medical Emergencies and Deaths |
| APP 4-21G; | Mass Casualty Plan |
| APP 8-14G; | Fixed-Wing Passenger/Cargo Transportation |
| APP 8-27G; | Community Support Missions |
| APP 8-43G; | Additional Fixed-Wing Aircraft Flights for Official AUTEC Requirements |
| APP 11-5G; | Hurricane Plan, Andros Ranges |

(AUTEC) Range Users Aviators' Manual (Including Landmarks)

AUTEC Capabilities Document (Latest Revision)

AUTEC Range Manual (Latest Revision)

AUTEC Operations Guide (Latest Revision)

Figure IV-1
AUTEC Real Time Display Centers 1 and 2

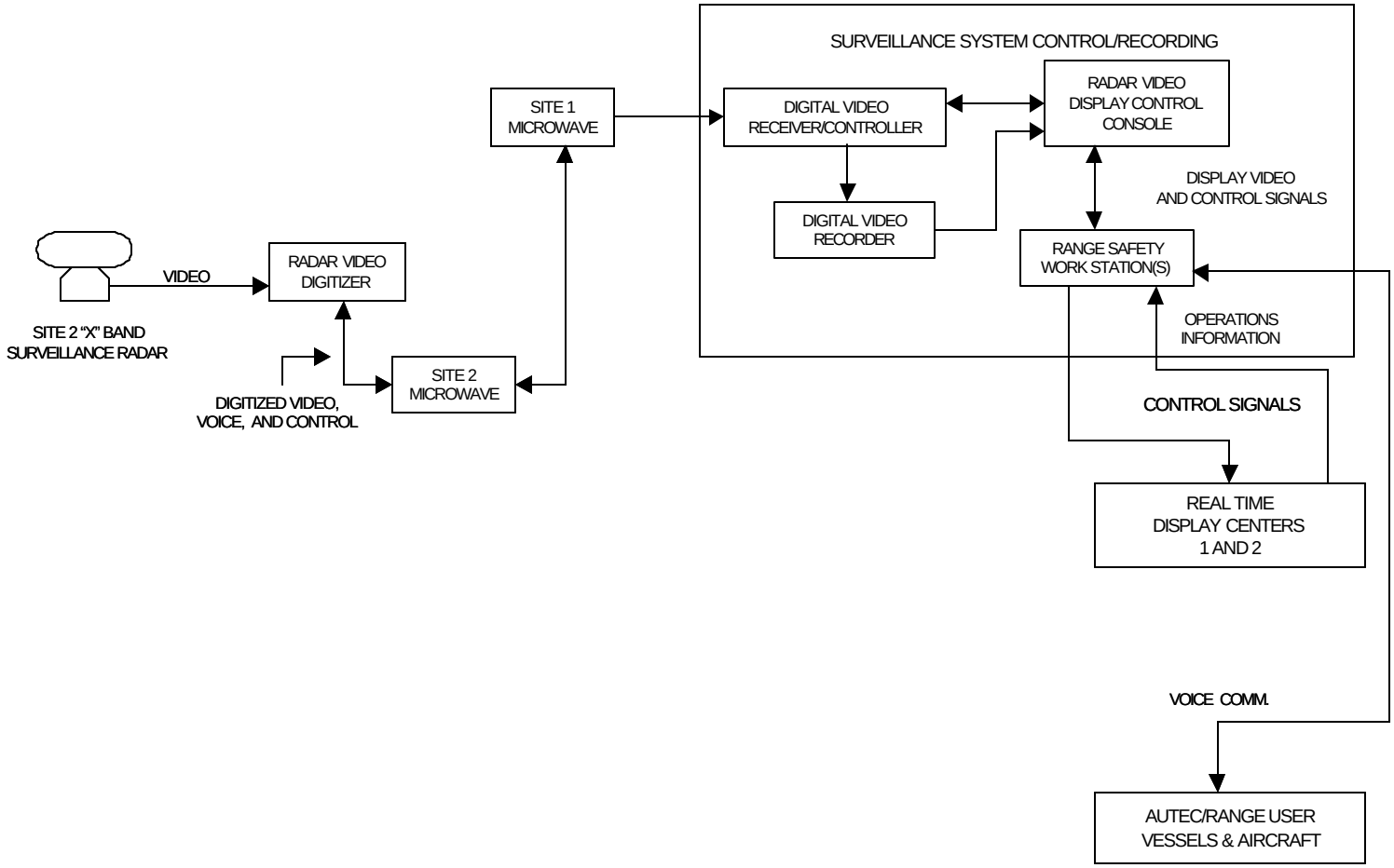


Figure IV-2
Weapons Range Surveillance/Weather Radar System

TEST CONDUCTOR/CONTROLLER
REQUIRED READING LIST

| Title | Chapters | Frequency |
|---|---|---|
| NUWCDIVNPTINST 5100.6 (Series); AUTEC Range Safety Manual | All | Monthly |
| (C) FXP-1 | Chap 3, Figures C-2, C-4, C-8, and C-9 | Monthly |
| (C) AXP-1 (U) | Chap 2, Table 3-1, 3-2, 3-3 and Chap 5 | Monthly |
| (C) COMSUBLANT OPORD 2000 (U) | Annex B, Annex C | Semi-Annually |
| (C) OPNAVINST C8510.12 (Series) (U) | All | Monthly |
| (C) OPNAVINST C8510.13 (Series) (U) | All | Monthly |
| (C) OPNAVINST C8510.15 (Series) (U) | All | Monthly |
| COMSUBLANT OPLAN 2137 | Annex C | Annually |
| (C) COMNAVSEASYSCOM ltr Ser 63T2/112 of 15 Jul 87 (U) | All | Annually |
| (C) COMSUBLANT OPORD 2148 (U) | Annex C, Annex K | Annually |
| (C) COMSUBLANT OPORD 2184 (U) | Annex C, Annex K | Annually |
| CINCLANTFLTINST 3120.25 | All | Annually |
| (C) ACP 165 (U) | All | Annually |
| (C) ACP 125 (U) | All | Annually |
| (C) COMSUBLANT OPORD 2128 (U) | Annex C, Annex K | Annually |
| (C) CINCLANTFLTINST 3120.26 (U) | Sec 1, 2, 3, 4, and 22 | Annually |

Table IV-1

| | | |
|---|---|---|
| OPNAVINST 3100.6 | OPREP 3 Navy Blue | Semi-Annually |

Table IV-1

# IV. TEST OPERATIONS AND CUSTOMER SUPPORT (CONT.)

## 2. CUSTOMER/VISITOR SUPPORT

### A. GENERAL

The tempo of operations, size, location, and high visibility of AUTEC combine to require that AUTEC host numerous visitors each year, both at AUTEC's West Palm Beach Headquarters and on Andros Island. Each visitor, whether an actual or potential Range User, a U.S. or government elected or appointed official or other dignitary or military member, or a member of a Government inspection team or oversight agency, is important to NUWC.

### B. DESCRIPTION

The mission of AUTEC centers on supporting the research, development, test, evaluation, and training needs of the U.S. Navy, and others, as they relate to Undersea Warfare and other ocean technologies. AUTEC, while unique in many of its capabilities, must compete for both resources and test programs with other Navy ranges. In addition to providing excellent technical capabilities, and the best possible test data,the impressions which Range Users and other visitors have of AUTEC are vitally important to AUTEC's reputation and future success. The impression which NUWC wishes to make on all visitors to AUTEC is one of a highly professional and capable organization, willing to support not only individual tests/programs but the overall goals of the U.S. Navy as well.

Such impressions are formed directly from the appearance, as well as the readiness condition, of all AUTEC assets and facilities, and the attitude, competence, and appearance of AUTEC personnel with whom they interact. Range Users form such impressions during the planning and execution of their tests/programs. Other visitors will form their impressions during tours, briefings, and demonstrations.

### C. CONTRACTOR RESPONSIBILITIES

1. The Contractor shall support AUTEC's host/visitor requirements in accordance with the AUTEC Schedule of Operations, published Operations Directives, Workload Factors given in paragraph D, Applicable Documents cited in paragraph F, and other requirements stated below. Special requirements may be tasked by NUWC Work Order or Letter of Direction.

2. The Contractor shall provide host/visitor support services

at AUTEC's West Palm Beach Headquarters. The host/visitor function will support Range Users and other visitors in the areas of: manifesting (both personnel and equipment) on Contractor flights between the West Palm Beach, FL, International Airport and the Andros Town Airport; verifying security clearances and issuing appropriate identification badges; arranging for transient quarters at Site 1 on Andros Island; and providing general information and assistance as requested by NUWC.

3. The Contractor shall provide Range User Coordinator and host/visitor support services at Site 1 on Andros Island. Services shall include such functions as arranging/coordinating: transportation; housing; supply/logistics; communications; etc.; and providing other administrative assistance as may by requested by the assigned NUWC Code 7006 Test Program Manager (see also Chapter IV(1) of this Specification).

4. The Contractor shall exert his best efforts to maintain the appearance of AUTEC's resources and Andros Island facilities.

5. The Contractor shall support tours, briefings, and functional demonstrations for visitors as requested by NUWC. Normally, such visits are arranged several weeks in advance, and are scheduled during normal work hours; however, the Contractor is expected to support such visits even if scheduled on very short notice and/or outside normal work hours. The Contractor is expected to be represented by persons of responsibility and authority as appropriate for the circumstances of each such visit.

6. The Contractor shall provide site support, logistic, and office administrative and clerical services to support United Kingdom (UK) operations conducted at AUTEC. Services required include:

a. Clerical and office administrative support which shall be provided, both at AUTEC’s Site 1 on Andros Island and at the Cape Canaveral Air Force Station (CCAFS), FL, in office spaces assigned to the UK. Support at AUTEC’s Site 1 will be limited to the time frame beginning two weeks prior to the start of each UK operation and ending two weeks after each operation is complete. Support at CCAFS, FL, will similarly be limited to periods centered around UK operations. In addition to normal clerical/office

administrative tasks, the responsible employee will periodically be required to escort UK visitors (up to VIP level) between various points within the CCAFS. Because the responsible employee will, in effect, represent the UK trials organization, a high standard of dress, appearance, and decorum will be required.

b. Logistic, caretaker, and resident site support which shall be provided at CCAFS, FL, for spaces assigned to the UK. The majority of effort will be centered around UK operations. Logistic support includes arranging for import/US Customs Service clearances and transportation of UK equipment to Cape Canaveral, Andros Island, Naval Air Station Jacksonville, FL, and Panama City, FL, and subsequent return to the UK. Caretaker support shall include custodial care of UK facilities, as well as equipment remaining on-site, and acting as a single point-of-contact when UK representatives are not present. Resident support includes liaison with local representatives of the US Air Force, Navy, Army and NASA, as well as with local merchants, to obtain goods and services to support UK submarines, surface ships and aircraft before, during, and after AUTEC trials periods.

7. The Contractor shall assure that all personnel assigned to host, brief, or otherwise interact directly with official visitors to AUTEC, as well as those personnel assigned to perform work aboard Range User vessels, or otherwise represent AUTEC "in public", present themselves in a professional manner. It is expected that such persons will dress as may be appropriate to the

situation/location at hand, and that they shall observe such courtesies as may be warranted by the office/position occupied by the individual(s) with whom they are working. Persons assigned to work aboard U.S. Navy ships, or in other primarily military situations, shall be familiar with/observe all relevant protocols and customs.

8. The Contractor shall submit all NUWC-required technical and administrative reports, described in Chapter XXV of this Specification, as pertain to support of AUTEC's Customer/Visitor support function.

## D. WORKLOAD FACTORS

1. UK support workload is estimated as follows:

a. Clerical/office administrative services at Site 1 on Andros Island requires two individuals to be assigned during the times specified. The total of such support will not exceed three fourths (3/4) of a workyear.

b. Clerical/office administrative services at CCAFS, FL, will require one individual for approximately 120 days per year. Seven day work weeks and daily overtime may be necessary during UK operational periods.

c. Logistic, caretaker, and resident site support at CCAFS will require one individual for approximately two thirds (2/3) of a workyear.

2. Host/Visitor support services shall be available at AUTEC's West Palm Beach Headquarters during normal work hours.

3. The Range User Coordinator support function on Andros Island shall be available during normal work hours, Monday through Friday except during periods of Range Maintenance/Range Stand-down.

4. Visitor tours, briefings, and demonstrations shall be supported as scheduled by NUWC. Normally, such activities shall be scheduled during regular work hours on Andros Island, but may, on occasion, be scheduled otherwise. While not a hard and fast rule, visitors, regardless of personal rank, are normally afforded courtesies commensurate with the office which they represent. Visits, in order of precedence, for a typical year may include:

| OFFICE | LEVEL |
|---|---|
| Dignitaries | 2 Ambassador |
| | 2 Congressional |
| DoD (Office of Secretary) | 1 Admiral (O7-O8) |
| | 2 Captain (O6) |
| | 4 Civilian (GS15/SES) |

| | |
|---|---|
| DoN (Office of Secretary) | 4 Assistant Secretaries<br>2 Civilian (GS15/SES) |
| CNO | 4 Admiral (O7-O8)<br>2 Civilian (GS15/SES) |
| Foreign Military Representatives | 4 Admirals (O7-O8 equivalent)<br>4 Captain (O6 equivalent)<br>2 Civilian (GS15/SES/ secretariat equivalent) |
| CINCLANT | 1 Admiral (O7-O9)<br>1 Captain (O6)<br>2 Civilian (GS15/SES) |
| TYCOM | 12 Admiral (O7-O8)<br>6 Captain (O6)<br>2 Civilian (GS15/SES) |
| SYSCOM | 4 Captain (O6)<br>4 Civilian (GS15/SES) |
| Range User/ other Activities | (As suggested by the various Workload Factors Appearing in this Chapter) |

5. Approximately 350 reservation actions, (AUTEC aircraft/Andros transient housing) are expected each month.

## E. KEY PERSONNEL/PERSONNEL QUALIFICATIONS

None.

## F. APPLICABLE DOCUMENTS

| | |
|---|---|
| Other OCDs; | Relevant/Related OCDs as may be listed in Table XV-4 |
| APP 4-11G; | Access Control: AUTEC Project Personnel and Visitors or Personal |

JA1-132
N61339-97-C-0001

Guests at NUWCDETAUTEC Facilities

| | |
|---|---|
| APP 4-18G; | Security and Boarding Procedures for Aircraft Passengers and Baggage |
| APP 8-14G; | Fixed-Wing Passenger/Cargo Transportation |
| APP 8-43G; | Additional Fixed-Wing Aircraft Flights for Official AUTEC Requirements |

# XX. PUBLIC WORKS (CONT.)

## 2. UTILITIES OPERATION

### A. GENERAL

The remote nature of AUTEC's various sites on Andros Island, and lack of services available from the local community dictate that AUTEC must provide for all its own utility services, including water, electrical power, trash and garbage disposal, sewage, POL storage and dispensing, etc.. The reliability and efficiency of these operations are critical to both the accomplishment of AUTEC's mission and the welfare of assigned personnel.

### B. DESCRIPTION

Electrical power for all of AUTEC's Andros Island sites is provided by diesel- engine-powered generators. The largest power generation and distribution system supports Site 1. Other sites are supported by installed generators, and portable (e.g. wheel mounted) generators are available for contingency use. Table XX-4 provides a representative list of AUTEC's power generating equipment. Actual inventory is as provided by NUWC.

Fresh water for all sites comes from wells, intrusion trenches, and catchments located at Site 1. Water is first passed through a sand filter system and then through a reverse osmosis water treatment plant, which has a capacity of approximately 150K gallons per day. Each downrange site has storage capacity for approximately 30K gallons of fresh water, all of which is transported by vessels from Site 1.

Non-hazardous materials which cannot be recycled, as well as trash and garbage are disposed of commercially at a landfill site on Nassau. The commercial vendor provides collection and compaction equipment at Site 1, as well as twice a month transportation between Site 1 and Nassau. Classified material must be destroyed by shredding, mulching, or burning as appropriate to comply with governing security requirements. Hazardous waste is collected separately and returned to CONUS for disposal (see also Chapters XXI(1) and XXII(2) of this Specification).

Sewage disposal at Site 1 is served by a 120K gallon per day treatment plant, sludge drying beds, and polishing ponds. Downrange sites and remote areas of Site 1 are served by French drains and septic tank systems.

Fuel, including diesel oil for the electrical generating plants, vessels, etc., gasoline for motor vehicles and small engines (MOGAS), and aviation jet fuel (JET A1) for helicopters, etc. is brought to the individual Andros Island sites by

barge. Fuels are provided under a separate DoD contract. A tank farm for bulk fuel storage is located at Site 1, and each of the downrange sites has storage for local needs. A Service Station, located at Site 1, is provided for the dispensing of fuel for vehicles and portable equipment.

Conservation of utilities is extremely important due to cost and limited resources.

A small chemistry lab is provided at Site 1 for purposes of performing preliminary potable water quality, sewage plant effluent, and boiler water analysis. The chemistry laboratory is not a certified facility, and cannot perform compliant environmental analysis. See also Chapter XXII(2) of this Specification.

## C. CONTRACTOR RESPONSIBILITIES

1. The Contractor shall maintain AUTEC's utilities equipment, facilities, and distribution systems and related assets in an operational status at all times as are needed to perform their intended function. Utilities services shall be provided in accordance with the Workload Factors given in paragraph D, Applicable Documents cited in paragraph F, and other requirements stated below. Special requirements may be tasked by NUWC Work Order or Letter of Direction.

2. The general approach to accomplishing AUTEC's utilities support requirements is that routine day-to-day tasks shall be performed by the Contractor, except that procured services shall be arranged for to dispose of non-hazardous trash and garbage commercially. Arrangements for manufacturer or other procured services to support occasional, extraordinary, or specialty requirements related to this work area shall be made by the Contractor on a case-by-case basis considering cost effectiveness, schedule, or other requirements as approved by NUWC.

3. The Contractor shall maintain, check-out, calibrate, man, and operate all of AUTEC's utilities equipment, facilities, and distribution/collection systems in accordance with the standards and procedures established by the AMS, The Final Governing Standards for Andros Island, other Applicable Documents listed in paragraph F, as delineated in maintenance and operation manuals provided by the manufacturer, or to commercial standards, as appropriate. Maintenance of electrical power generators at AUTEC's various Andros Island sites includes the periodic overhaul of the diesel engine prime movers. These engines are normally overhauled in-place. The contractor shall

develop strategy, appropriate to each type of equipment, to accomplish such overhauls in an economical fashion.

4. The Contractor shall provide a qualified Base Chemist who shall monitor boiler water treatment, potable water quality, and sewage treatment plant effluent output daily or as otherwise may be required to ensure that established operating, safety, and health factors are within tolerance. The Contractor shall arrange for periodic independent analysis, by a Florida state-certified environmental laboratory, of samples to verify local findings. Potable water and waste water quality standards, sampling techniques and analysis frequency shall comply with the requirements of The Final Governing Standards for Andros Island. See also Chapter XXII (2) of this Specification. The Contractor shall arrange for fuel samples to be tested as required by DoD 200G.

5. The Contractor shall dispose of all non-hazardous surplus materials, waste, scrap, and sewage sludge from all of AUTEC's Andros Island sites in accordance with the requirements of The Final Governing Standards for Andros Island, DoDD 4160.21M, NAVFAC MO-213 (as appropriate), and the AUTEC Solid Waste Management Plan. See also Chapter XXI (1) of this Specification. As may be economically practical, all waste materials shall be recycled, reused, or reclaimed. The Contractor shall establish and maintain a regular schedule for trash and garbage collection and removal. The Contractor shall arrange for the continued commercial disposal of AUTEC's Andros Island non-hazardous solid waste (e.g. trash and garbage) by the most economical and environmentally safe means practicable, subject to approval by NUWC. As applicable, the Contractor shall operate trash compaction equipment, deliver filled containers to the pier at Site 1, and load them for transport to Nassau or perform such similar services as may be necessary to properly dispose of AUTEC's Andros Island non-hazardous solid waste. The Contractor shall support these, and other U.S. Navy initiatives to protect the local environment, and maximize resource conservation. See also Chapter XXII(2) of this Specification. Detailed records shall be maintained of the types and amounts of non-hazardous waste generated, disposed of, reused, recycled, or sold through the Defense Reutilization and Marketing Office (DRMO). These records shall be kept for a minimum of seven years.

6. The Contractor shall implement an aggressive, on-going program to familiarize personnel with the need for, and means of, conserving electrical power, water, and fuel. The Contractor shall develop and place in operation an energy management and energy conservation program in accordance with the requirements of APP 8-45G and OPNAVINST 4100.5 (Series). Energy management guidelines for activities cited in these references shall be pursued to the maximum extent possible, and detailed records shall be maintained to verify that conservation techniques are adequate to meet required goals. See also Chapters XX(1) and XXI(2) of this Specification. These records shall be kept for a minimum of five years. The Contractor shall prepare and submit a monthly water and energy conservation report to NUWC.

7. The Contractor shall manage and control AUTEC's petroleum, oil, and lubricants (POL) inventory in accordance with the requirements of the Applicable Documents cited in paragraph F, and shall control the dispensing of fuels as outlined in APP 7-8G. Gasoline and diesel fuel for retail sale shall be made available to the ARA and controlled as described in Chapter XXVII of this Specification. The Contractor shall collect reimbursement each month from the ARA for the cost of fuel sold at retail. Such reimbursements shall be returned to the Government and reported in the monthly Cost Control Report (see Chapters XXI(1) and XXV of this Specification).

8. The Contractor shall collect data, maintain records, and prepare and submit a monthly fuel/utilities report to NUWC. This report shall show beginning and ending inventory stock levels, receipts, consumption, and gains/losses through inventory of all fuels. Fuel consumption shall be itemized by AUTEC site no. and specific usage. The report shall additionally show electrical power consumption by site no., reverse osmosis plant output, and total potable water consumed. Report is due by the 6th working day of the subsequent month.

9. The Contractor shall provide an adequate staff of persons, qualified and capable of not only performing the tasks inherent to the operations of utilities as installed at AUTEC, but also of performing the following:

a. Developing and maintaining an inventory of Government provided materials, consumables, expendables, and repair/spare parts as may be necessary to support AUTEC's utilities facilities, and distribution/collection systems in accordance with the policies provided in Chapter XXI (1) of this Specification.

b. Providing technical support to Purchasing for procurements related to facilities maintenance and repair projects including: specification writing; technical evaluation of proposals; cost review; quality review; technical qualification of sources; preparation of inspection and acceptance procedures; and conduct of acceptance inspections/tests as appropriate.

c. Arranging for manufacturer or other procured support of facilities maintenance and repair functions on a case-by-case basis considering cost effectiveness, schedule, or other requirements as approved by NUWC.

d. Providing NUWC Work Order support.

10. Contractor personnel assigned to fuel operations shall be trained, in accordance with the requirements of the AUTEC Installation Spill Contingency Plan (ISPC).

11. The Contractor shall maintain and operate AUTEC's POL storage facilities, tanks, containment areas, and pipelines in accordance with the requirements of The Final Governing Standards for Andros Island, and other Applicable Documents cited in paragraph F. The Contractor shall ensure that all POL storage facility and tank containment areas are routinely inspected, and that storm water drainage logs (e.g. records) are maintained.

12. The Contractor shall maintain/operate AUTEC's Andros Island potable water production and distribution systems following the requirements set forth in The Final Governing Standards for Andros Island. The Contractor shall perform, and keep current, required vulnerability assessments and emergency contingency plans. The Contractor shall maintain and keep current required distribution system drawings. The Contractor shall maintain an up-to-date inventory of all potable water system backflow prevention and cross-connection control devices. The Contractor shall perform an annual potable water system Sanitary Survey, as delineated in AUTEC’s Potable Water Master Plan (see also Chapter XXII(2) of this Specification). Personnel assigned to work on these devices and other component parts of AUTEC’s potable water system shall be trained and certified in accordance with the requirements of OPNAVINST 5090.1 (Series). Any work performed on AUTEC’s potable water system shall be closely monitored to ensure the integrity of the system and to prevent contamination.

13. The Contractor shall maintain a record of all required training, and/or certifications described above, received by each individual. Personnel who have not been so trained or certified shall not be permitted to perform work without supervision.

14. The Contractor shall maintain records, collect data, prepare and submit reports as may be required by the Documents listed in paragraph F. The Contractor shall assist NUWC in the conduct of any utilities-related inspections, surveys, audits, etc. required/conducted by outside authority. The Contractor shall respond promptly to any special requests for data/reports.

15. The Contractor shall submit all NUWC-required technical and administrative reports, described in Chapter XXV of this Specification, as pertain to support of AUTEC's utilities function.

## D. WORKLOAD FACTORS

1. As derived from information presented in paragraph C. Monthly production averages are as follows:

| Site | Electrical | R.O. Plant |
|---|---|---|
| 1 | 1,730,000 KWH | 3,680,000 Gal. |
| 2 | 75,000 KWH | - |
| 3 | 75,000 KWH | - |
| 4 | 60,000 KWH | - |

2. Site 1 electrical power, potable water, and sewage systems operate 24 hours per day/365 days per year.

3. AUTEC generates approximately 110 tons of trash and garbage per month (approximately 50% each of municipal and industrial waste).

4. AUTEC Site 1 generates approximately 80K gallons of sewage per day, and approximately one half ton of dry sewage sludge per year.

## E. KEY PERSONNEL/PERSONNEL QUALIFICATIONS

None.

## F. APPLICABLE DOCUMENTS

| | |
|---|---|
| Final Governing Standards for Andros Island; | Prepared by Commander-in-Chief, U.S. Atlantic Fleet (CINCLANTFLT) |
| DoD Publication 200G; | Military Standardization Handbook: Fuels, Lubricants, and Related Products |
| DoDD Manual 4160.21; | Defense Utilization and Marketing Manual (DoD Disposal Manual) |
| OPNAVINST 4020.25 (Series); | Controlling and Accounting for Ground Fuels |
| OPNAVINST 5090.1 (Series); | Environmental and Natural Resources Protection Manual |
| OPNAVINST 4100.5 (Series); | Energy Management |
| NAVFAC MO-213; | Guidance on Solid Waste |
| NAVFAC MO-321; | Maintenance Management of Public Works and Utilities |
| NAVFAC MO-322 Vol.2; | Inspection of Public Works and Utilities |
| Other OCDs; | Relevant/Related OCDs as may be listed in Table XV-4 |

| | |
|---|---|
| APP 4-15G; | Control of Feral Animals and Domesticated Dogs and Cats - AUTEC Base |
| APP 7-8G; | Gasoline, Fuel Oils and Lubricants: Consumption and Control |

| | |
|---|---|
| APP 8-41G; | AUTEC Project Qualified Recycling Program |
| APP 8-45G; | AUTEC Energy Management Program |
| APP 11-3G; | Fire Protection Policy |
| APP 11-5G; | Hurricane Plan, Andros Ranges |
| APP 11-8G; | Hazardous Materials Control and Management Program |
| APP 11-12G; | Policy for AUTEC Project Bloodborne Pathogens (BBP) Program |
| APP 11-13G; | Hazardous Waste Management Policy |
| APP 11-17G; | Chemical Laboratory Hygiene |
| APP 11-18G; | Confined and Enclosed Space Safety |

AUTEC Potable Water Master Plan

AUTEC Solid Waste Management Plan

AUTEC Utilities System Manuals; As listed in Table XV-5

AUTEC Installation Spill Contingency Plan

AUTEC Pollution Prevention (P2) Plan

## POWER GENERATING EQUIPMENT

| EQUIPMENT* | LOCATION | Qty |
|---|---|---|
| Waukesha 750 KW | Main Base Power Plant | 10 |
| Waukesha 500 KW | Command Control Building | 2 |
| Caterpillar 3208 289HP | Main Base Water Plant | 1 |
| Cummins Onan 30 KW | Main Base Dispensary | 1 |
| Caterpillar 353E 200 KW | Site 2 Power Plant | 2 |
| DMT 150 KW | Site 3 Power Plant | 2 |
| DMT 150 KW | Site 4 Power Plant | 2 |
| Onan 12 KW | Portable, Skid Mount | 1 |

- - - - - *deleted* - - - - -

* Note: See also additional power generating equipment listed in Table XX-5

# XX. PUBLIC WORKS (CONT.)

## 3. TRANSPORTATION

### A. GENERAL

Transportation, within the area of Public Works, encompasses all functions related to the operation and maintenance of rolling stock, construction (heavy), and material/weight handling equipment in support of AUTEC.

### B. DESCRIPTION

AUTEC's transportation requirements, both internal and to support Range User needs, are primarily centered on Andros Island. Rolling stock on Andros Island includes a variety of passenger vehicles, light trucks, heavy trucks and trailers, construction and special purpose vehicles, and material/weight handling equipment belonging to both AUTEC and to Range Users. U.S. Navy aviation ground support equipment (GSE), at the Site 1 heliport, is maintained to support the needs of visiting Range User helicopters. For purposes of this Specification all such items will be referred to collectively as vehicles.

Transportation requirements in West Palm Beach, FL, are mostly directed toward on-loading/off-loading aircraft cargo at the West Palm Beach International Airport, and temporary warehousing of material bound to/from Andros Island (see Chapter XXI (1) of this Specification).

Maintenance of vehicles on Andros Island is facilitated by a Public Works garage located at Site 1.

Transportation equipment maintenance and fleet management requirements/responsibilities are facilitated through provision of a Government-provided desktop computer software suite entitled “PC Transport”.

Table XX-5 provides a list of AUTEC's rolling stock and portable WHE/MHE equipment. Table XX-6 lists AUTEC's Range User-owned U.S. Navy aircraft Ground Support Equipment (GSE). Both tables are considered to be representative. Actual inventory is as provided by NUWC.

### C. CONTRACTOR RESPONSIBILITIES

1. The Contractor shall maintain AUTEC's transportation equipment, including all passenger vehicles, light trucks, heavy trucks and trailers, construction and special purpose vehicles, material and weight handling equipment (MHE and WHE), and assigned Range User

vehicles and aviation GSE in an operational status. Transportation services, including maintenance and fleet management, shall be provided in accordance with the AUTEC Schedule of Operations, published Operations Directives, Workload Factors given in paragraph D, Applicable Documents cited in paragraph F, and other requirements stated below. Special requirements may be tasked by NUWC Work

Order or Letter of Direction. The Contractor shall provide services to procure/dispose of vehicles such as requested by NUWC. No vehicles shall be added to, or deleted from, AUTEC's inventory without specific permission from NUWC.

2. The general approach to accomplishing AUTEC's transportation requirements, as well as for periodic test, inspection, and preventative maintenance, and for repair by component replacement, of vehicles on Andros Island is that such tasks shall be performed by the Contractor. Defective components may be repaired, if repair is warranted, by the Contractor or the manufacturer or others, whichever NUWC deems to be most cost effective. Light trucks, automobiles, and similar vehicles with major engine problems will normally be replaced; however, if warranted, they shall be returned to CONUS for repair. For heavy vehicles and equipment, the Contractor shall determine whether engine repair/replacement is the most cost effective option and shall develop a strategy to accomplish such work. The approach to maintenance of CONUS transportation equipment is that it should be provided by the most cost effective means. Arrangements for manufacturer or other procured services to support occasional, extraordinary, or specialty requirements related to this work area shall be made by the Contractor on a case-by-case basis considering cost effectiveness, schedule, or other requirements as approved by NUWC.

3. The Contractor shall maintain, check-out, calibrate, and operate all vehicles in accordance with the standards and procedures established by the OCDs and other Applicable Documents cited in paragraph F, as delineated in maintenance and operation manuals provided by the manufacturers, or in accordance with commercial standards and practices, as applicable.

4. The Contractor shall provide an adequate staff of persons, qualified and capable of not only performing the tasks inherent to the maintenance and operation of vehicles as provided by AUTEC, but also of:

a. Developing and maintaining an inventory of Government-provided consumables, expendables, and repair/spare parts for all vehicles in accordance with the policies provided in Chapter XXI(1) of this Specification.

b. Performing periodic tests, inspections, and preventative maintenance. Diagnosing equipment

malfunctions and restoring operation in a timely manner by replacement of components.

c. Providing technical support to Purchasing for procurement of vehicles including: specification writing; technical evaluation of proposals; cost review; technical qualification of sources; preparation of inspection and acceptance procedures; and conduct of acceptance inspections/tests as appropriate.

d. Arranging for manufacturer or other procured support of AUTEC's vehicles on a case-by-case basis considering cost effectiveness and other requirements as approved by NUWC.

e. Providing NUWC Work Order support.

5. The Contractor shall implement and adhere to a training, testing, and licensing program for personnel assigned to operate U.S. Government vehicles with a gross vehicle weight of 10,000 pounds or more in accordance with the requirements of NAVFAC P-300. The Contractor shall maintain a record of all such training received by each individual. Personnel who have not been licensed shall not be permitted to conduct operations without supervision. Personnel driving vehicles of less than 10,000 pounds gross vehicle weight must possess a valid U.S. state or Bahamian drivers license.

6. The Contractor shall provide a training, testing, and licensing program for all personnel assigned to operate construction equipment and MHE/WHE in accordance with the requirements of DoD Instruction 4500.36-R, NAVFAC P-300, P-306, and P-307, DoD 4145.19R-1, and OCD-(13.1)-01-XX as appropriate. The Contractor shall assure that all personnel assigned to handle/transport exercise ordnance, explosives, or pyrotechnic devices are additionally trained, tested, and licensed in accordance with the requirements cited in NAVSEA OP-5 and Chapter IX(1) of this Specification. The Contractor shall maintain a record of all such training and certifications received by each individual. The Contractor shall locally develop a license to be issued to contractor personnel listing the types of equipment they are qualified to operate. Personnel who have not been so licensed or certified shall not be permitted to conduct operations without supervision.

7. The Contractor shall control the dispatch and assignment of vehicles in accordance with guidelines provided in NAVFAC P-300 except as amended by APP 7-9G. The Contractor shall keep records, and prepare and submit an annual Vehicle Inventory and Utilization Report to NUWC. This report shall additionally cite specific vehicle inventory changes (additions/deletions) made since the previous report. The Contractor shall also prepare and submit periodic reports as required by NAVFAC P-300 and other Applicable Documents cited in paragraph F.

8. The Contractor shall provide bus and base taxi service at Site 1. Scheduled on-base bus service shall be provided between all areas within Site 1. On-call base taxi or bus service shall be provided to support Range User needs or as may be requested/approved by NUWC. Bus service to/from the Andros Town Airport shall be provided for all scheduled passenger flights provided under this contract (see Chapter XIX(1) of this Specification). The Contractor shall, subject to NUWC approval, develop and adhere to a schedule to provide off-base bus service, for resident and transient personnel, between Site 1 and Andros Town and Coakley Town during evening hours. Both the vehicle and the designated pick-up/drop-off point(s) within Site 1 shall be clearly marked. Schedule and route information shall be publicized and readily available to both resident and transient personnel. The Contractor may provide scheduled bus service between Site 1 and the roundabout (e.g. traffic circle) in Coakley Town, coordinated with the beginning and end of scheduled work shifts, to transport employees who live off-base. Such services shall be an allowable expense under this contract.

9. The Contractor shall perform periodic vehicular safety inspections and preventative maintenance. As required by The Final Governing Standards for Andros Island, vehicles located at AUTEC's Andros Island sites, having factory-installed emission control equipment, shall be inspected biennially to ensure that such systems are intact and operational. Cars and light trucks shall be serviced as recommended by the manufacturer. Construction and heavy equipment shall be serviced as required by NAVFAC P-300, or the manufacturer, as applicable. WHE and MHE shall be maintained in accordance with requirements recommended by the manufacturer and as required by NAVFAC P-307, SPCCINST 10490.2, and NAVSUP 538. The Contractor shall assure that all

shore-based WHE/MHE is periodically inspected and tested, and that the load carrying capacity is certified in accordance with the requirements cited in NAVFAC P-307 and Chapter XIII(1) of this Specification. Repairs shall be performed as required. The Contractor shall keep records of all inspections and maintenance actions performed for each vehicle and piece of equipment. The Contractor shall keep a record of costs incurred for each individual vehicle and piece of equipment.

10. The Contractor shall keep AUTEC's vehicles clean and in good appearance. Vehicles in need of sheet metal work or other body repairs or re-painting, may be returned to CONUS for such work repaired locally, or replaced, whichever is deemed to be most cost effective by NUWC.

11. The Contractor shall control disposition of vehicles in accordance with NAVFAC P-300, FAR, DFARS, and NAPS requirements, and as approved by NUWC.

12. As required by The Final Governing Standards for Andros Island, all repairs or services to air conditioners installed in AUTEC's Andros Island vehicles will use commercially available refrigerant recycling equipment operated by trained personnel. The Contractor shall assure that no intentional atmospheric releases of Class 1 or Class 2 CFC refrigerants are allowed in the course of maintaining, repairing, or servicing vehicular air conditioning systems. See also Chapter XXII(2) of this Specification.

13. The Contractor shall maintain all of AUTEC's Range User-owned U.S. Navy aviation Ground Support Equipment (GSE) in a ready-for-issue status for use by visiting Range User helicopter squadron personnel, and shall manage, and submit reports for, all Individual Material Readiness List (IMRL) items and equipment in accordance with the definitions and requirements of OPNAVINST 4790.2 (Series) Vol. II and COMNAVAIRLANT 13650.1 (Series). In addition:

a. Personnel assigned responsibility to manage the maintenance of such items and equipment must be graduates of the U.S. Navy Support Equipment Maintenance Manager Course (No. AS-7609 or subsequent). NUWC will arrange for such training for otherwise qualified individuals.

b. Preventative maintenance of GSE shall be performed in accordance with the Planned Maintenance (PM) System requirements of the U.S. Navy's Maintenance and Material Management (3M) Program as required by OPNAVINST 4790.2 (Series).

c. Personnel assigned to maintain certain specific GSE equipments must be graduates of U.S. Navy training courses as listed below. Individuals who are not so trained shall not be authorized or allowed to perform any maintenance functions.

| Equipment | Course No./Description |
|---|---|
| • NC/8A Mobile Electric Power Units | •AS-7614/Shore Based Mobile Electric Power Plant Intermediate Maintenance Technician (or subsequent) |
| • A/M34M-2 Nitrogen Servicing Units and Hector Air Pumps | • AS-7601/Support Equipment Cryogenic Mechanic (or subsequent) |

NUWC will arrange for such training for otherwise qualified individuals.

d. Personnel who are assigned responsibilities which include driving either GSE aircraft tow tractors or GSE mobile power units must be trained as required by OPNAVINST 4790.2 (Series) Vol. II. NUWC will arrange for qualified Navy military aviation specialists to provide such training on-site. These personnel shall additionally possess/maintain a current/valid civilian driver's license. Only personnel meeting these requirements shall be authorized/allowed to drive such equipments. The Contractor shall additionally ensure that any Range User representative, to whom such equipments are temporarily issued for use, has in their possession a valid U.S. Navy Support Equipment (SE) operator's license as described in OPNAVINST 4790.2 (Series) Vol. I.

The Contractor shall keep a record of all of the required training, described above, received by each individual.

14. The Contractor shall maintain records, collect data, prepare and submit reports as may be required by the documents cited in paragraph F. The Contractor shall assist NUWC in the conduct of any transportation related inspections, surveys, audits, etc. required/conducted by outside authority. The Contractor shall respond promptly to any special requests for data/reports.

15. The Contractor shall submit all NUWC-required technical and administrative reports, described in Chapter XXV of this Specification, as pertain to support for AUTEC's transportation functions.

## D. WORKLOAD FACTORS

1. Site 1 bus service shall be provided at intervals of relative passenger convenience between the hours of 0600 and 2200 Monday through Friday, and 0800-2000 on Saturdays, Sundays and Holidays.

2. Airport bus service shall be in accordance with scheduled passenger flights to/from Andros Town Airport.

3. On-call base taxi/bus service shall be available 24 hours per day, 365 days per year.

4. Aircraft cargo loading/unloading requirements may be estimated from information presented in Chapter XIX(1) and XXI(1) of this Specification.

5. MSC barge unloading requirements may be estimated from information presented in Chapter XXI(1) of this Specification.

6. Weapon, test vehicle, and target transportation and handling requirements may be estimated from information presented in Chapter IX of this Specification.

7. Construction and special purpose vehicle operating requirements may be estimated from information presented in other sections of this chapter.

8. Preventative maintenance of vehicles, WHE, MHE, and GSE may be estimated from information presented in paragraph C.

## E. KEY PERSONNEL/PERSONNEL QUALIFICATIONS

None.

## F. APPLICABLE DOCUMENTS

| | |
|---|---|
| Final Governing Standards for Andros Island; | Prepared by Commander-in-Chief, U.S. Atlantic Fleet (CINLANTFLT) |
| DoD 4145.19R-1; | Storage and Materials Handling |
| DoD 4500.36-R; | Management Acquisition and Use of Motor Vehicles |

| | |
|---|---|
| OPNAVINST 4790.2 (Series); | The Naval Aviation Maintenance Program |
| COMNAVAIRLANT 13650.1 (Series); | Naval Air Systems Command Aircraft Maintenance Material Readiness List Program |
| NAVFAC (Publication) P-300; | Management of Transportation Equipment |
| NAVFAC (Publication) P-306; | Testing and Licensing of Weight Handling and Construction Equipment Operators |
| NAVFAC (Publication) P-307; | Management of Weight Handling Equipment |
| NAVSUP (Publication) 538; | Materials Handling Equipment Maintenance Manual |
| NAVSUPINST 10490.33 (Series); | Materials Handling Equipment; Administration and Control of |
| SPCCINST 10490.2 (Series); | Material Handling Equipment for Naval Shore Establishment and Land Based Operating Forces; Administration and Control of |
| NAVSEA OP-5; | Ammunition and Explosives Ashore, Safety Regulations for Handling, Storing, Production, Renovation and Shipping |
| NAVSEA SW 020-AC-SAF-010/020/030; | Transportation and Storage Data for Ammunition, Explosives, and Related Hazardous Materials |
| NAVSEA OP 2165 Volume 1; | Navy Transportation Safety Handbook for Ammunition, Explosives, and Related Hazardous Materials |
| NAVSEA SWO23-AH-WHM-010; | Handling Ammunition, Explosives, and Hazardous Materials with Industrial Material Handling Equipment |
| NUWCDETAUTECINST 7030.1 (Series); | Private Use of Government Equipment |

| | |
|---|---|
| OCD-(13.1)-01-XX; | Management of Shore-Based Weight Handling Equipment |
| Other OCDs; | Relevant/Related OCDs as may be listed in Table XV-4 |
| APP 4-21G; | Mass Casualty Plan |
| APP 7-8G; | Gasoline, Fuel Oils and Lubricants: Consumption and Control |
| APP 7-9G; | Government Vehicle Assignment, Dispatch, and Control |
| APP 7-10G; | Motor Vehicle Traffic Program |
| APP 7-11G; | Use and Control of GSA and Navy-Owned Vehicles - AUTEC Project - CONUS |
| APP 7-15G; | Shipment of Personal Property |
| APP 8-14G; | Fixed-Wing Passenger/Cargo Transportation |
| APP 8-25G; | AUTEC Waterfront Procedures and Regulations |
| APP 8-27G; | Community Support Missions |
| APP 8-32G; | Emergency Shipment of Handcarry Cargo on Sunday and Holiday Flights |
| APP 11-3G; | Fire Protection Policy |
| APP 11-5G; | Hurricane Plan, Andros Ranges |
| APP 11-13G; | Hazardous Waste Management Policy |
| AUTEC Transportation System Manual: | Transporation Equipment Management Information Database |

AUTEC ROLLING STOCK INVENTORY

**ASD - NAVY/NUWC/NLO ASSIGNED**

| Current Inventory: 15 | USN # | YR |
|---|---|---|
| Cart Utility | 00-38526 | 92 |
| - - - - - *reassigned* - - - - - | | |
| - - - - - *deleted* - - - - - | | |
| Cart Passenger | 00-71158 | 95 |
| Cart Passenger | 00-71160 | 95 |
| Cart Utility | 00-71162 | 95 |
| Cart Utility | 00-71164 | 95 |
| Cart Passenger | 00-84584 | 98 |
| Cart Passenger | 00-84585 | 98 |
| Cart Passenger | 00-84587 | 98 |
| Cart Utility | 00-89662 | 00 |
| Cart Utility | 00-89664 | 00 |
| Truck Van Mini (NLO) | 93-28689 | 92 |
| - - - - - *reassigned* - - - - - | | |
| Truck Van Carryall | 93-31374 | 95 |
| Van Compact, 8 Passenger | 93-33411 | 98 |
| - - - - - *reassigned* - - - - - | | |
| - - - - - *reassigned* - - - - - | | |
| Pickup Truck | 94-66829 | 01 |
| Pickup Truck | 94-66833 | 01 |

Note: All Navy/NUWC/NLO vehicles are on NUWC's CESE allowance (except utility carts).

**ASD – CONTRACTOR ASSIGNED**

BUSSES

| Current Inventory: 3 | USN # | YR |
|---|---|---|
| Bus 15 Passenger | 93-25886 | 90 |
| - - - - - *deleted* - - - - - | | |
| Bus 21 Passenger | 91-08058 | 95 |
| Bus 44 Passenger | 91-08249 | 98 |

Table XX-5

# AUTEC ROLLING STOCK INVENTORY

## PASSENGER VEHICLES

| Current Inventory: 10 | USN # | YR |
|---|---|---|
| Auto Sedan | 92-26085 | 90 |
| Auto Sedan | 92-26088 | 90 |
| Auto Sedan | 92-26225 | 90 |
| Truck Van 8 Passenger | 93-28676 | 92 |
| Truck Van 8 Passenger | 93-28677 | 92 |
| Station Wagon, Compact | 93-29493 | 93 |
| Station Wagon, Compact | 93-29494 | 93 |
| Truck Van 8 Passenger | 93-31372 | 95 |
| Truck Van Carryall | 93-33005 | 98 |
| Truck Van 8 Passenger | 94-66117 | 00 |

## PICKUPS

| Current Inventory: 37 | USN # | YR |
|---|---|---|
| Pickup Truck 1/2 Ton | 94-36891 | 88 |
| Pickup Truck 1/2 Ton | 94-36989 | 88 |
| Pickup Truck 1/2 Ton | 94-37010 | 88 |
| Pickup Truck 1/2 Ton | 94-46790 | 92 |
| Pickup Truck 1/2 Ton | 94-46840 | 92 |
| - - - - - *deleted* - - - - - | | |
| Pickup Truck 1/2 Ton | 94-50094 | 92 |
| Pickup Truck 1/2 Ton | 94-50095 | 92 |
| Pickup Truck 1/2 Ton | 94-50096 | 92 |
| Pickup Truck 1/2 Ton | 94-50097 | 92 |
| Pickup Truck | 94-50098 | 92 |
| Pickup Truck 1/2 Ton | 94-50423 | 92 |
| - - - - - *deleted* - - - - - | | |
| - - - - - *deleted* - - - - - | | |
| Pickup Truck 1/2 Ton | 94-50426 | 92 |
| Pickup Truck C/C 1 Ton 4X4 | 94-50530 | 92 |
| Pickup Truck 4X4 | 94-54537 | 94 |
| Pickup Truck 4X4 | 94-54547 | 94 |
| Pickup Truck C/C 1 Ton 4X4 | 94-56011 | 94 |
| Pickup Truck 3/4 Ton 4X4 | 94-58025 | 95 |
| Pickup Truck 3/4 Ton | 94-58089 | 95 |

| | | |
|---|---|---|
| Pickup Truck 1/2 Ton | 94-58091 | 95 |
| Pickup Truck 1/2 Ton | 94-58299 | 95 |

Table XX-5 (cont.)

AUTEC ROLLING STOCK INVENTORY

| Current Inventory: | USN # | YR |
|---|---|---|
| Pickup Truck 1/2 Ton | 94-58260 | 95 |
| Pickup Truck 1/2 Ton | 94-58261 | 95 |
| Pickup Truck 1/2 Ton | 94-58262 | 95 |
| Pickup Truck 1/2 Ton | 94-58263 | 95 |
| Pickup Truck 1/2 Ton | 94-58300 | 95 |
| Pickup Truck 1/2 Ton | 94-58301 | 95 |
| Pickup Truck 1/2 Ton | 94-58465 | 95 |
| Pickup Truck 1/2 Ton | 94-58466 | 95 |
| - - - - - *deleted* - - - - - | | |
| - - - - - *deleted* - - - - - | | |
| - - - - - *deleted* - - - - - | | |
| Pickup Truck 1/2 Ton | 94-63683 | 98 |
| Pickup Truck | 94-63684 | 98 |
| Pickup Truck 1 Ton | 94-65404 | 84 |
| Pickup Truck | 94-66827 | 00 |
| Pickup Truck | 94-66828 | 00 |
| Pickup Truck | 94-66830 | 00 |
| Pickup Truck | 94-66831 | 00 |
| Pickup Truck | 94-66832 | 00 |
| Pickup Truck | 94-66834 | 00 |

SPECIAL PURPOSE VEHICLES

| Current Inventory: 30 | USN # | YR |
|---|---|---|
| Tractor Utility 67 HP | 48-17589 | 86 |
| Tractor Utility 26 HP | 48-18591 | 99 |
| Tractor Utility 65 HP | 48-18592 | 99 |
| Truck Spill | 54-08749 | 98 |
| Sweeper Motorized Small | 55-99952 | 92 |
| Truck Dumpster | 58-02550 | 95 |
| Truck Dumpster | 58-02595 | 95 |
| Truck/Crash/Fire/Rescue | 71-02702 | 85 |
| Truck/Crash/Fire/Rescue | 71-02734 | 87 |
| Truck Firefighter | 73-02525 | 78 |
| Truck Firefighter | 73-03115 | 92 |
| Truck Fuel Spill | 84-0012 | 94 |

Table XX-5 (cont.)

AUTEC ROLLING STOCK INVENTORY

| Current Inventory: | USN # | YR |
|---|---|---|
| Truck Van Step | 94-45042 | 92 |
| Truck Flatbed 1/2 Ton | 94-50099 | 92 |
| Truck Van Step | 94-50546 | 92 |
| Truck Van Step | 94-50751 | 92 |
| Truck Van Step | 94-50752 | 92 |
| Truck Van Step | 94-50753 | 92 |
| Truck Flatbed 3/4 Ton | 94-58026 | 95 |
| Truck Pickup 1/2 Ton | 94-58298 | 95 |
| Ambulance | 94-58302 | 95 |
| - - - - - *deleted* - - - - - | | |
| Truck Van Cargo | 94-63701 | 98 |
| Truck 1 Ton Bucket | 95-29153 | 94 |
| Truck Fuel 1500 GL DSL | 95-29434 | 94 |
| Haz Response Van | 95-29475 | 95 |
| - - - - - *deleted* - - - - - | | |
| Truck Bucket VERSALIFT | 96-45672 | 93 |
| Truck Fuel 2500 GL JA1 | 96-45683 | 94 |
| Truck Wrecker | 96-46864 | 98 |
| Truck Refueler 2800 GL JA1 | 96-46985 | 98 |
| Trailer, HAZMAT Response | 97-38701 | 88 |

Table XX-5 (cont.)

# AUTEC ROLLING STOCK INVENTORY

## CONSTRUCTION/HEAVY EQUIPMENT

| Current Inventory: 9 | USN # | YR |
|---|---|---|
| Truck Mixer Cement | 24-03366 | 98 |
| - - - - - *deleted* - - - - - | | |
| Loader Backhoe | 45-03913 | 92 |
| Loader Scoop | 45-04100 | 96 |
| Roller Vibratory | 46-03154 | 95 |
| Trencher Coral | 48-18502 | 95 |
| Bulldozer | 48-18541 | 76 |
| Truck Dump | 96-37197 | 94 |
| Truck Dump HI/Lift | 96-39502 | 83 |
| Truck 10 YD Dump | 96-44783 | 92 |

## FORKLIFTS

| Current Inventory: 21 | USN # | YR |
|---|---|---|
| Truck Forklift | 13-00113 | 92 |
| Truck Forklift | 13-30877 | 92 |
| Truck Forklift DED | 13-40028 | 91 |

Table XX-5 (cont.)

# AUTEC ROLLING STOCK INVENTORY

| Current Inventory: | USN # | YR |
|---|---|---|
| Truck Forklift | 13-48078 | 91 |
| Truck Forklift | 13-48081 | 91 |
| Truck Forklift 30K | 13-48651 | 96 |
| Truck Forklift DED | 13-63563 | 92 |
| Truck Forklift DED | 13-65528 | 96 |
| Truck Forklift DED | 13-65529 | 96 |
| Truck Forklift R/T | 13-78993 | 92 |
| Truck Forklift R/T | 13-78998 | 91 |
| Truck Forklift R/T | 13-78999 | 91 |
| Truck Forklift R/T | 13-79220 | 92 |
| Truck Forklift R/T | 13-79248 | 92 |
| Truck Forklift R/T | 13-79749 | 91 |
| Truck Forklift R/T | 13-79750 | 90 |
| Truck Forklift ELEC | 13-82873 | 92 |
| Truck Forklift | 13-84855 | 91 |
| Truck Forklift DED | 13-90975 | 92 |
| Truck Forklift ELEC | 13-90976 | 92 |
| Truck Forklift DED | 13-90977 | 92 |

## CRANES

| Current Inventory: 3 | USN # | YR |
|---|---|---|
| Crane Truck 35T | 82-05254 | 90 |
| Crane R/T 80T | 82-05412 | 81 |
| Crane Truck MTG Stinger | 96-45992 | 95 |

- - - - - *deleted* - - - - -

## TRACTOR/TRAILERS

| Current Inventory: 12 | USN # | YR |
|---|---|---|
| - - - - - *deleted* - - - - - | | |
| Truck Tractor | 96-41958 | 86 |
| Truck Tractor | 96-41959 | 86 |
| Truck Tractor Jockey | 96-42494 | 89 |
| Truck Tractor Jockey | 96-44084 | 90 |
| Truck Tractor Jockey | 96-45982 | 95 |

AUTEC ROLLING STOCK INVENTORY

| Current Inventory: | USN # | YR |
|---|---|---|
| Truck Tractor | 96-46563 | 90 |
| - - - - - *deleted* - - - - - | | |
| Trailer Flatbed 45 FT | 97-33748 | 85 |
| Trailer Dump | 97-40054 | 92 |
| Trailer Flatbed 45 FT | 97-40769 | 95 |
| Trailer Flatbed 45 FT | 97-40770 | 95 |
| Trailer Flatbed 48 FT | 97-40771 | 95 |
| Trailer Flatbed 48 FT | 97-40772 | 95 |

TRUCKS - GENERAL PURPOSE

| Current Inventory: 8 | USN # | YR |
|---|---|---|
| - - - - - *deleted* - - - - - | | |
| Truck Van Cargo | 93-29199 | 92 |
| Truck Van Cargo | 93-31371 | 95 |
| - - - - - *deleted* - - - - - | | |
| Truck Van Cargo | 93-33206 | 98 |
| Truck Van Cargo | 94-54818 | 93 |
| - - - - - *deleted* - - - - - | | |
| Truck Van Cargo | 95-28925 | 92 |
| Truck Stakebed 4 X 2 | 95-28973 | 93 |
| Truck Stakebed 4 X 2 | 96-44782 | 92 |
| Truck Van Cargo | 96-46564 | 87 |

EQUIPMENT

| Current Inventory: 11 | USN # | YR |
|---|---|---|
| Aircraft Loader | 14-19716 | 85 |
| Compressor Port Air | 31-07487 | 89 |

AUTEC ROLLING STOCK INVENTORY

| Current Inventory: | USN # | YR |
|---|---|---|
| Compressor Portable Air | 31-07858 | 92 |
| Generator 55KW MOB | 51-21948 | 86 |
| Welder ARC/Trailer | 51-23111 | 90 |
| Generator 200KW | 51-23707 | 93 |
| Welder ARC AC/DC (TIG) | 51-23779 | 92 |
| Generator 100KW | 51-23892 | 92 |
| Welder ARC/Trailer | 51-77558 | 89 |
| Welder ARC AC/DC (TIG) | 51-77559 | 89 |
| Aerial Manlift Self Prop. | 54-08763 | 98 |

UTILITY CARTS

| Current Inventory: 38 | USN# | YR |
|---|---|---|
| Cart Utility | 00-38521 | 92 |
| Cart Utility | 00-38522 | 92 |
| Cart Utility | 00-38523 | 92 |
| Cart Utility | 00-38524 | 92 |
| Cart Utility | 00-38525 | 92 |
| Cart Utility | 00-39577 | 92 |
| Cart Utility | 00-39637 | 92 |
| Cart Passenger | 00-39638 | 92 |
| - - - - - *deleted* - - - - - | | |
| Cart Passenger | 00-39808 | 92 |
| Cart Utility | 00-40925 | 91 |

AUTEC ROLLING STOCK INVENTORY

| Current Inventory: | USN # | YR |
|---|---|---|
| *- - - - - deleted - - - - -* | | |
| Cart Passenger | 00-41285 | 91 |
| Cart Passenger | 00-41289 | 91 |
| Cart Passenger | 00-71491 | 95 |
| Cart Utility | 00-71492 | 95 |
| Cart Utility | 00-71493 | 95 |
| Cart Utility | 00-71494 | 95 |
| Cart Utility | 00-71495 | 95 |
| Cart Utility | 00-71496 | 95 |
| Cart Utility | 00-71497 | 95 |
| Cart Utility | 00-84583 | 98 |
| Cart Utility | 00-84586 | 98 |
| Cart Utility | 00-84588 | 98 |
| Cart Utility | 00-84589 | 98 |
| Cart Utility | 00-84590 | 98 |
| Cart Utility | 00-84591 | 98 |
| Cart Utility | 00-84592 | 98 |
| Cart Utility | 00-84593 | 98 |
| Cart Utility | 00-84594 | 98 |
| Cart Utility | 00-84595 | 98 |
| Cart Passenger | 00-89660 | 00 |
| Cart Passenger | 00-89661 | 00 |
| Cart Utility | 00-89663 | 00 |
| Cart Utility | 00-89665 | 00 |
| Cart Utility | 00-89666 | 00 |
| Cart Utility | 00-89667 | 00 |
| Cart Utility | 00-89824 | 00 |
| Cart Utility | 00-89825 | 00 |
| Cart Utility | 00-89826 | 00 |

# AUTEC ROLLING STOCK INVENTORY

## UTILITY VEHICLES

| Current Inventory: 2 | USN # | YR |
|---|---|---|
| Gator, Utility | 00-90764 | 00 |
| Gator, Utility | 00-90765 | 00 |

## ASD--RANGE USER EQUIPMENT

| Current Inventory: 8 | TAG # | YR |
|---|---|---|
| 4-Door Pickup Truck | NA | - |
| 4-Door Pickup Truck | NA | - |
| 8-Seater Passenger Van | NA | - |
| 8-Seater Passenger Van | NA | - |
| 4-Seater Station Wagon | NA | - |
| Golf Carts (3) | NA | - |

Table XX-5 (cont.)

AUTEC ROLLING STOCK INVENTORY

**WPB – CONTRACTOR ASSIGNED**

| Current Inventory: 15 | USN # | YR |
|---|---|---|
| Forklift | 13-47328 | 92 |
| Forklift | 13-70273 | 80 |
| Forklift | 13-70275 | 96 |
| Forklift | 13-88844 | 87 |
| Forklift | 13-90973 | 92 |
| Bus 17 Passenger | 91-07656 | 91 |
| Truck Van Cargo | 93-27000 | 89 |
| Pickup Truck | 94-50427 | 92 |
| Pickup Truck | 94-63694 | 97 |
| Pickup Truck | 94-66245 | 00 |
| Truck Van Cargo | 96-45043 | 92 |
| Trailer Flatbed 40ft | 97-40682 | 95 |
| Truck Van Mini | GSA G41-25890 | 96 |
| Truck Van Mini | GSA G41-34931 | 98 |
| Truck Van Passenger | GSA G42-38004 | 95 |

Table XX-5 (cont.)

AUTEC
RANGE USER AVIATION GROUND SUPPORT EQUIPMENT INVENTORY

| EQUIPMENT NOMENCLATURE | | SERIAL NO. |
|---|---|---|
| **EXTERNAL POWER UNITS** | | |
| A. | NC/8A-1 MEPP | 136008 |
| B. | NC/8A-1 MEPP | 261095 |
| C. | NC/8A-1 MEPP | 261835 |
| D. | NC/8A-1 MEPP | 263790 |
| **AIRCRAFT TOW TRACTORS** | | |
| A. | *- - deleted - -* | |
| B. | A/S32A-30 | RYR575 |
| C. | A/S32A-30 | RYR576 |
| D. | A/S32A-30 | RYR577 |
| E. | A/S32A-30 | RYR578 |
| **MAINTENANCE PLATFORMS** | | |
| A. | B-1 | MP0268 |
| B. | B-1 | MP0365 |
| C. | B-1 | MP0366 |
| **PORTABLE FLOOD LIGHTS** | | |
| A. | A/M42M-2 | QFJ215 |
| B. | A/M42M-2 | QFJ220 |
| C. | A/M42M-2 | QFJ223 |
| D. | A/M42M-2 | QFJ226 |
| **HYDRAULIC TEST STANDS** | | |
| A. | A/M27T-6 | 000191 |
| B. | A/M27T-6 | 000232 |

Table XX-6

AUTEC
RANGE USER AVIATION GROUND SUPPORT EQUIPMENT INVENTORY

| EQUIPMENT NOMENCLATURE | | SERIAL NO. |
|---|---|---|
| FOAMERS | | |
| A. | MAGNUS FOAM & CLEAN | 011436 |
| B. | MAGNUS FOAM & CLEAN | 011775 |
| CORROSION CONTROL CARTS | | |
| A. | FMC13479 | KFV104 |
| B. | FMC13479 | KFV113 |
| C. | FMC13479 | KFV153 |
| NITROGEN SERVICING UNIT | | |
| A. | A/N 34M-2 NITROGEN SERVICING HAND TRUCK | 147045 |
| B. | A/M 34M-2 NITROGEN SERVICING HAND TRUCK | RLN094 |
| C. | WALK AROUND BOTTLE | 000240 |
| CORROSION WANDS | | |
| A. | *- - deleted - -* | |
| B. | *- - deleted - -* | |
| C. | *- - deleted - -* | |
| AIRCRAFT TOW BARS | | |
| A. | ALBAR-24 | ALB001 |
| B. | ALBAR-24 | ALB002 |
| DUMMY-LOAD ELECTRICAL | | |
| A. | DA-675/MSM | 72449-30 |

Table XX-6

*- - deleted - -*

Table XX-6 (cont.)

AUTEC
RANGE USER AVIATION GROUND SUPPORT EQUIPMENT INVENTORY

| EQUIPMENT NOMENCLATURE | | SERIAL NO. |
|---|---|---|
| PRE-OILERS | | |
| A. | PON-6 PRE-OILER | 6A-12016 |
| B. | PON-6 PRE-OILER | A12044 |
| TRAILERS/DOLLIES/ADAPTERS | | |
| A. | WEAPONS TRAILER | X56141 |
| B. | BOMB TRAILER 001612 | |
| C. | DOLLY MK-24 | 000252 |
| D. | ADAPTER MK-137 | 000239 |
| E. | DOLLY MK-24 | 000255 |
| F. | ADAPTER MK-137 | 000193 |

*- - deleted - -*

| SMALL MAINTENANCE PLATFORMS | | |
|---|---|---|
| A. | STAND | GSE001 |
| B. | STAND | GSE002 |
| C. | STAND | GSE003 |
| D. | STAND | GSE004 |
| E. | STAND | GSE005 |
| HYDRAULIC AUTO FLOOR JACKS & STANDS | | |
| A. | SNAP-ON 4 TON FLOOR | 033840 |
| B. | 2 TON | X04393 |
| C. | 5 TON AUTO JACK STAND | 000011 |
| D. | 5 TON AUTO JACK STAND | 000012 |
| E. | 5 TON AUTO JACK STAND | 000013 |
| F. | 5 TON AUTO JACK STAND | 000014 |
| G. | 5 TON AUTO JACK STAND | 000015 |
| H. | 5 TON AUTO JACK STAND | 000016 |

Table XX-6 (cont.)

Table XX-6 (cont.)

AUTEC
RANGE USER AVIATION GROUND SUPPORT EQUIPMENT INVENTORY

| EQUIPMENT NOMENCLATURE | | SERIAL NO. |
|---|---|---|
| MISC. SUPPORT EQUIPMENT | | |
| 1. | Aero 58A Trailer Skid | 000020 |
| 2. | Aero 58A Trailer Skid | 002355 |
| 3. | Aero 58A Trailer Skid | 002356 |
| 4. | Aero 58A Trailer Skid | 002360 |
| 5. | Aero 58A Trailer Skid | 00H123 |
| 6. | Aero 58A Trailer Skid | 00H234 |
| 7. | Transporter Munitions | NGU722 |
| 8. | Transporter Munitions | MLX728 |
| 9. | Transporter Munitions | MLZ982 |

Table XX-6 (cont.)

# XX. PUBLIC WORKS (CONT.)

## 4. ENGINEERING (FACILITIES)

### A. GENERAL

AUTEC's facility engineering needs are primarily related to the maintenance, repair, replacement, or alteration of existing facilities on Andros Island. Occasionally, new construction projects must be accomplished to either support Range User needs or to make improvements to AUTEC's infrastructure. To an even lesser degree, planning and layout work is sometimes required for modifications to AUTEC's West Palm Beach Headquarters facility.

### B. DESCRIPTION

Facilities engineering will manage, direct and give technical support requirements for: facilities planning; documenting known requirements; development of specifications, plans, and related documentation; production of design drawings; development of bills of material and cost estimates; surveying; conducting field inspections; maintaining records and as-built drawings; and other related tasks in accordance with NAVFACINST 11010.44 (Series).

Facilities engineering personnel support maintenance and repair work items, as well as minor construction and alteration projects under the purview of the Contractor or other subcontractor. They also support planning for other projects; including military construction (e.g. MILCON) in conjunction with the Naval Facilities Engineering Command (NAVFAC), which are accomplished either by an independent construction contractor or by military members of the Naval Construction Forces (NCFs, or “Seabees”).

### C. CONTRACTOR RESPONSIBILITIES

1. The Contractor shall maintain all of AUTEC's facilities engineering support equipment in an operational status. Facilities engineering services shall be provided in accordance with the AUTEC Schedule of Operations, published Operations Directives, the Workload Factors given in paragraph D, Applicable Documents cited in paragraph F, and other requirements stated below. Special requirements may be tasked by NUWC Work Order.

2. The general approach to accomplishing AUTEC's facilities engineering requirements is that such tasks shall normally be performed by the Contractor utilizing a small core of professional engineers. The staff should be sufficient to accomplish routine, day-to-day tasks, with their efforts primarily directed towards the providing oversight to subcontracted projects. The staff should be cross utilized to the maximum extent practicable, both within this specification chapter and other specification chapters. It is noted that the workload factors cited in section D of this chapter are estimates only and should not be construed as any type of minimum/maximum staffing level. Arrangements for procured services to

support requirements related to this area shall be made by the Contractor on a case-by-case basis, considering the cost effectiveness, schedule or other requirements extraordinary, or specialty requirements related to this work area shall be made by the Contractor on a case-by-case basis considering the cost effectiveness, schedule, or other requirements as approved by NUWC.

3. The Contractor shall maintain, check-out, calibrate, and operate all of AUTEC's facilities engineering equipment in accordance with the standards and procedures established by applicable OCDs and/or as delineated in maintenance and operation manuals provided by the manufacturer.

4. The Contractor shall provide support for the operation, maintenance, modification, documentation, and configuration control of the NUWC approved Computer Aided Design (CAD) computer systems and software provided to support the facilities engineering function on Andros Island. CAD computer assets and software shall be controlled as described in Chapters VI(1) and VI(2) of this Specification. All such software shall remain the property of NUWC.

5. The Contractor shall support AUTEC's internal as well as Range User facilities engineering needs by providing an adequate staff of persons qualified to perform the following tasks:

a. Maintains an inventory of Government-provided material to support AUTEC's facilities engineering scope of work as defined in this chapter.

b. Provide technical support to Purchasing for procurement of facilities engineering design services, construction services, related equipment, and building materials including: specification writing; technical evaluation of proposals; cost review; quality review; technical qualification of sources; preparation of inspection and acceptance procedures; and conduct of acceptance inspections/tests as appropriate.

c. Manage the in-house or Subcontracted efforts to conceive and design complete, sometimes special-purpose, facilities, facilities modifications, and facilities alterations including required utilities systems, installed facilities equipment.

d. Manage in-house or Subcontractors' efforts to perform geodetic and site surveys, produce plans and drawings.

e. Manage in-house or Subcontractors' efforts to develop engineering drawings, detailed plans, and produce as-built drawings.

f. Provide oversight to in-house or Subcontractors selected to produce program and siting forms, environmental impact statements, economic analyses, and other documents as may be required to obtain approval from higher authority for construction projects.

g. Manage in-house or Subcontractors' efforts to develop specifications, bills of material, cost estimates, etc., for minor and major repair, alteration, and minor and major construction projects.

h. Monitor in-house or Subcontractors' efforts to document and plan energy conservation projects.

i. Allow the performance of special studies and analysis by in-house or qualified subcontractors.

j. Monitor in-house or Subcontractor work in-progress.

k. - - - - - *deleted* - - - - -

l. Provide NUWC Work Order support with in-house or subcontracted labor.

6. As requested or approved by NUWC, the Contractor, or its Subcontractor shall prepare documents, specifications, drawings, bills of material, cost estimates, etc. in the format and detail appropriate to the nature, scope, and cost of each project, in accordance with the requirements of the Applicable Documents cited in paragraph F. The Contractor, or its Subcontractor, shall provide environmental impact documentation for each project as required by Chapter XXII(2) of this Specification. As applicable, ensure that energy conservation/energy management requirements and guidelines contained in OPNAVINST 4100.5 (Series) and APP 8-45G are taken into account in the design and acquisition of facilities projects and installed systems. The Contractor shall ensure that project designs/design changes are reviewed/approved by Facilities Engineering, Facilities Operations and Maintenance, NUWC Security, the Fire Department, Environmental, and Safety personnel as applicable to the nature/scope of the project.

The Contractor shall perform similar tasks related to demolition/removal of any unneeded facilities, as requested by NUWC.

7. The Contractor shall periodically monitor maintenance, repair, alteration, and construction work in-progress, whether being performed by the Contractor, Subcontractor, or NCF personnel, to ensure that work performed is per plan and specification and of acceptable quality, approve minor changes based upon conditions at hand, and to ensure that changes are incorporated into as-built drawings and to provide/coordinate requisite support services.

a. An Initial Operating Capability (IOC) inspection shall be conducted by both the Contractor and Subcontractor when a major repair, alteration, or minor construction project is considered by the Contractor to be sufficiently complete so as to allow the facility to be used for its intended purpose (e.g. no major defects or uncompleted systems). This inspection must be completed prior to use of the facility. The NUWCDETAUTEC Staff Facility Engineer (SFE) (Code 7007) shall be notified a minimum of five working days prior to such inspections. An inspection, which identifies any deficiencies or uncompleted work (e.g. "punch-list" items) or documentation required for final inspection of the project, together with estimated completion dates, an IOC report (package) shall be submitted to SFE within 15 working days of completion of the inspection. If the IOC inspection reveals no uncompleted work or required documentation deficiencies, the IOC report (package) is submitted as is.

b. Final Acceptance ("Closeout" package) of a project shall normally be scheduled within 60 days of the IOC report submittal. When a major repair, alteration, or minor construction project is ready for Final Acceptance by the Government (e.g. all deficiencies corrected and all documentation complete), the Contractor shall forward a Certificate of Final Acceptance (part of the "Closeout" package) to SFE for Government signature. A signed copy of this certificate by NUWC shall be forwarded to the Contractor and kept permanently in the appropriate project file.

8. The Contractor or its Subcontractor shall provide surveying services for construction projects, to refine range tracking precision, to support Range User requirements, or as may otherwise be requested by NUWC. Work includes such typical surveying tasks as establishing True North reference through celestial observation, measuring angles and distances, location of survey markers and geodetic survey points, establishing elevation profiles using stadia, setting bounds, construction siting and layout, measuring distances using laser distance measuring equipment, etc. The Contractor and its Subcontractor shall maintain liaison with the National Imagery and Mapping Agency (NIMA) as required to update charts and maps of areas of interest to AUTEC, and shall support NIMA as described in OCD-(16)-50-XX (see also Chapter XVI of this Specification).

9. The Contractor shall collect data, maintain records, and prepare financial and descriptive updates to the Naval Facility Asset Data Base, for all AUTEC Class II real property, as described and required by NAVFAC P-72 and P-78 and prepare other reports as may be required by the Applicable Documents cited in paragraph F. The Contractor shall assist NUWC in the conduct of any facilities-related inspections, surveys, audits, etc. required/conducted by outside authority. The Contractor shall respond promptly to any special requests for data/reports.

10. Contractor personnel shall attend meetings related to facilities engineering matters. The Contractor shall be prepared to make technical and programmatic presentations to senior Government or other contractor representatives as requested by NUWC.

11. The Contractor or its Subcontractor shall develop, or assure that the manufacturer provides, and shall subsequently maintain technical documentation for new or modified utility, service, alarm, and similar facility-related equipment and systems installed in, or supportive of, AUTEC's Andros Island facilities. Such documentation shall include complete, accurate engineering

drawings, technical (installation, operating, and maintenance) manuals, maintenance procedures, parts lists, etc. The Contractor or its Subcontractor shall develop periodic preventive maintenance requirements and procedures documentation for all such equipment and systems in accordance with requirements of the AMS.

12. The Contractor shall be responsible (or if a Subcontractor is used to ensure it's that the Subcontractor fulfills all requirements) for the delivery of complete, finished products, of professional quality, to designated recipients in a timely manner, or as scheduled by Work Order.

13. The Contractor shall develop and provide NUWC through electronic medium with a Facilities Engineering Project Schedule and Status Report encompassing all planned and in-process work projects. The schedule will be updated at least monthly and will be done in the Contractor's existing format. Priorities will be assigned by NUWC. The schedule will denote project milestone dates, current status, initial cost estimates for both labor and materials.

14. The Contractor shall submit all NUWC-required technical and administrative reports, described in Chapter XXV of this Specification, as pertain to facilities engineering functions.

## D. WORKLOAD FACTORS

1. Typically, it is estimated that the number of engineering studies and associated reports generated will not exceed 8 per contract year.

2. Typically, it is estimated that the number of conceptual (10%) plans would not exceed 40 per contract year.

3. Typically, it is estimated that the number of preliminary (35%) plans and cost estimates reviewed for construction would not exceed twenty each contract year.

4. Typically, it is estimated that complete, preliminary plan and cost estimates will be required to be prepared for projects of the following scope each contract year:

| Types of Projects | Approximate Dollar Value | Estimated No. |
|---|---|---|
| Major Repair | Projects over $25K | 5 |
| Minor Construction*/ | Projects over $100K-500K | 3 |
| Alteration | Projects $25K-100K | 2 |
| | Projects less than $25K | 10 |

5. Typically, it is estimated that documentation will be required for one MILCON* Project ($500K or more) each year.

6. Minor repair and maintenance projects (less than $25K) are an as-occurring workload.

*NOTE: Defined limit for Minor Construction Projects is $500K, except that projects intended solely to correct a deficiency which is a threat to life, safety, or health is $1,000K.

## E. KEY PERSONNEL/PERSONNEL QUALIFICATIONS

1. Key Personnel: None.

2. Personnel Qualifications:

a. General: To successfully execute the professional responsibilities and tasks described, it is recommended that personnel assigned should as a minimum:

1. Have a BS degree in an appropriate engineering discipline, e.g. electrical, mechanical, civil and architectural engineering, and have at least 5 years of direct facilities engineering experience which includes preparation of technical documentation (e.g. specifications, drawings, technical reports, etc.) as well as actual construction oversight and field experience, or

2. In lieu of a degree, have extensive specialty training, have 10 or more years of direct experience and progressive responsibility, and demonstrated ability in one or more of the areas cited in paragraph (b.) below.

3. Have excellent oral and written communication skills.

b. Specific: Personnel assigned should collectively have excellent knowledge of:

1. Electrical power generation and distribution systems layout and design.

2. Water production and sewage treatment facilities design. Water and sewer main systems layout and design.

3. Plumbing systems layout and design.

4. Building and construction codes.

5. Air conditioning and mechanical systems layout and design.

6. Surveying techniques and practices.

7. CAD

8. Building/structural design including wind loading and other stresses.

9. Properties of construction materials and preservation requirements and techniques.

10. U.S. Navy instructions, procedures, and practices as relate to planning and execution of facilities maintenance, repair, and construction projects and facilities record keeping.

11. Environmental regulations and preparation of related impact studies.

12. Lightning protection.

13. Security Requirements.

## F. APPLICABLE DOCUMENTS

SECNAVINST 11010.5 (Series); Facilities Projects for Minor Construction, Repair and Maintenance of Real Property, and Equipment Installation; Approval Authorities for

| | |
|---|---|
| OPNAVINST 4100.5 (Series); | Energy Management |
| OPNAVINST 11010.20 (Series); | Facilities Projects Manual |

| | |
|---|---|
| NAVFACINST 11010.14 (Series); | Project Engineering Documentation (PED) for Proposed Military Construction Projects |
| NAVFACINST 11010.44 (Series); | Shore Facilities Planning Manual |
| NAVFAC DM 2.2 | Loads |
| NAVFAC (Publication) P-72; | Department of the Navy Facility Category Codes |
| NAVFAC (Publication) P-78; | Navy Facilities Assets Data Base Management System Procedures Manual |
| NAVFAC (Publication) P-80; | Navy Facilities Planning Criteria |
| OCD-(16)-50-XX; | Scheduling and Supporting Defense Mapping Agency Hydrographic/ Topographic Center (DMAHTC) Surveys |
| Other OCDs; | Relevant/Related OCDs as may be listed in Table XV-4 |
| APP 8-35G; | Base Support Planning and Estimating Request |
| APP 8-36G; | Self-Help Projects |
| APP 8-45G; | AUTEC Energy Management Program |
| APP 11-5G; | Hurricane Plan, Andros Ranges |

AUTEC Basic Facilities Requirements (BFR) Document

AUTEC (Facilities) Master Plan

Uniform Building Codes (building, mechanical, plumbing)

National Electrical Code

JA1-520a
N61339-97-C-0001
P00040

Florida Department of Transportation Road Specifications

National Fire Protection Association Codes

## XX. PUBLIC WORKS (CONT.)

### 5. MINOR CONSTRUCTION

#### A. GENERAL

AUTEC's remote location, and the lack of skilled trades support available within the local community dictate the need for AUTEC to provide a capability to construct new facilities, to add to or otherwise alter existing facilities, and to execute other minor construction projects. Within the U.S. Navy, "minor construction" is defined by a maximum dollar limit (e.g. currently $500K) as opposed to just the physical magnitude of a project. NUWC Division Newport, of which AUTEC is a Detachment, has authority to approve "minor construction" projects whose value does not exceed $1,000K.

#### B. DESCRIPTION

Construction is construed to mean the erection, installation, or assembly of a building, structure, road, or other item of Class II Real Property, and the installation of requisite utilities and facilities-related equipment, and similarly, the addition, expansion, extension, alteration or conversion of an existing building, structure, etc.. Construction encompasses site preparation, connection of utilities, the relocation of portable facilities, and all related work as well.

#### C. CONTRACTOR RESPONSIBILITIES

1. The Contractor shall provide support for accomplishing minor construction projects at AUTEC's various sites on Andros Island. Such support shall be provided in accordance with the Workload Factors given in paragraph D, Applicable Documents cited in paragraph F, and other requirements stated below. Special requirements may be tasked by NUWC Work Order or Letter of Direction.

2. The general approach to accomplishing AUTEC's minor construction requirements is that such tasks shall be performed by the Contractor. The Contractor may propose use of procured services or other means to accomplish occasional, extraordinary, or specialty requirements related to this work area. Specific arrangements for such support shall be made by the Contractor on a case-by-case basis considering cost effectiveness, schedule, or other requirements as approved by NUWC.

3. The Contractor shall assure that all minor construction work is performed to commercial standards and the codes cited, except as may otherwise be required by any overriding U.S. Navy standards contained in the documents cited in paragraph F.

4. The Contractor shall provide an adequate staff of persons, qualified in the various trades, and capable of not only performing the tasks described, and producing finished products of professional quality as is inherent to site preparation, construction of buildings, structures, roads, and like items of Class II property, the installation of electrical, plumbing, mechanical, and other facilities-related equipment, but also of performing the following:

a. Developing and maintaining an inventory of Government provided materials, consumables, expendables, and repair/spare parts as may be necessary to support AUTEC's minor construction needs in accordance with the policies provided in Chapter XXI (1) of this Specification.

b. Arranging for manufacturer or other subcontractor support of minor construction projects on a case-by-case basis considering cost effectiveness, schedule, or other requirements as approved by NUWC.

c. Providing NUWC Work Order support.

5. The Contractor shall implement and adhere to a work request program, as required by NAVFAC MO-321. Work requests shall be reviewed, and properly categorized, as required by OPNAVINST 11011.20 (Series) and APP 8-35G. Any work classified as minor construction or alteration shall be considered a Work Project and must be approved by NUWC prior to commencement of work.

6. The Contractor shall collect data, maintain records, and submit reports as may be required by the Applicable Documents cited in paragraph F. The Contractor shall assist NUWC in the conduct of any construction project inspections, surveys, audits, etc. required/conducted by outside authority. The Contractor shall respond promptly to any special requests for data/reports.

7. The Contractor shall submit all NUWC-required technical and administrative reports, described in Chapter XXV of this Specification, as pertain to minor construction functions.

## D. WORKLOAD FACTORS

1. Estimated average annual value of minor construction/facilities alteration projects: $200K (materials).

2. Estimated average number of minor construction/facilities alteration projects:

| Material Cost/Project | Estimated No./Yr. |
|---|---|
| Under $10K | 5 |
| Between $10K-25K | 5 |
| Over $25K | 2 |

## E. KEY PERSONNEL/PERSONNEL QUALIFICATIONS

None.

## F. APPLICABLE DOCUMENTS

| | |
|---|---|
| SECNAVINST 11010.5 (Series); | Facilities Projects for Minor Construction, Repair and Maintenance of Real Property, and Equipment Installation; Approval Authorities for |
| OPNAVINST 11010.20 (Series); | Facilities Projects Manual |
| NAVFAC MO-321; | Maintenance Management of Public Works and Utilities for Small Activities |
| OCD-(20.4)-22-XX; | Public Works Engineering, Construction and Maintenance Scheduling |
| Other OCDs; | Relevant/Related OCDs as may be listed in Table XV-4 |
| APP 8-35G; | Base Support Planning and Estimating Request |

Uniform Building Codes

National Electrical Code

Florida Department of Transportation Road Specifications

National Fire Protection Association Codes

# XXI. LOGISTICS

## 1. SUPPLY, INVENTORY, AND PROPERTY CONTROL

### A. GENERAL

AUTEC's remote location and the tempo of operations which must be supported, dictate the need for an efficient, comprehensive, and responsive supply operation. Government regulations as well as good business practice dictate that accurate records of all transactions be maintained.

### B. DESCRIPTION

The supply function encompasses all aspects of maintenance and operation support relative to the identification, procurement, transport, storage, issue, packaging, shipping, and disposal, as well as accounting for and otherwise controlling equipment, material, or services required to sustain AUTEC in the performance of its mission.

The Contractor is responsible for the timely and cost-effective procurement of all materials, supplies, and services required to maintain and operate AUTEC, which are not otherwise furnished by the Government. The Contractor shall have access to the Federal Supply System (i.e. DoD/Navy and GSA). Equipment, material, supplies, and services (beyond or in addition to those furnished under this contract) shall be obtained either through the Federal Supply System, or procured through open purchase. Fuel is provided through a Defense Energy Support Center contract, from which AUTEC's needs are requisitioned.

Transportation of food cargo, exercise weapons/targets, and other materials and goods to and from AUTEC's Site 1 (Main Base) on Andros Island is provided primarily by the Military Sealift Command (MSC), through the U.S. Army Outport at Port Canaveral, FL. This service may be supplemented by Government or Contractor aircraft or by occasional utilization of an AUTEC vessel (see also Chapters XVIII and XIX(1) of this Specification).

Items excess to project needs, as well as hazardous waste and other material which cannot, by law or regulation, be disposed of locally, must be properly marked and packaged and be similarly transported to CONUS for proper disposal (see also Chapters XX(2) and XXII(2) of this Specification).

Requisitions, status reports, etc., to/from the DoD/Navy Supply System are transmitted/received electronically between AUTEC and the Defense Automated Addressing System (see also Chapters VII(1) and XXV of this Specification).

Requisition status, inventory/issue control, and usage data collection are supported by various software systems (see also Chapters VI(1),

(2), and (3) of this Specification).

The Government provides 1,000 square feet of storage space at AUTEC's West Palm Beach, FL, Headquarters for the ATE program (see chapter XII of this Specification). Warehouse space at Site 1 on Andros Island includes: general (46,557 square feet); technical (24,780 square feet); aviation (1,600 square feet); flammable (1,317 square feet); and a 5,000 square foot Servmart area. Additional areas are provided for bottled gas (588 square feet); dispensary supplies (240 square feet); hazardous material (3,200 square feet); bulk fuel (683K gallons); and explosives (e.g. magazine) storage (1,778 square feet). Food storage facilities are described in Part 4 of this chapter. Relocatable storage facilities are listed in Table XX-2. Bench stock storage is located in the various work centers.

## C. CONTRACTOR RESPONSIBILITIES

1. The Contractor shall procure all supplies, equipment, and services required to support the AUTEC Project, and shall operate/control AUTEC's supply system in accordance with the Workload Factors given in paragraph D, Applicable Documents cited in paragraph F, and other requirements stated below. Special requirements may be tasked by NUWC Work Order or Letter of Direction.

2. The Contractor shall annually develop, and submit for NUWC approval, two budget estimates for the forthcoming Government Fiscal Year. One estimate shall be for anticipated Open Purchases, the other for anticipated procurements through the Federal Supply System. The Open Purchase budget estimate shall be organized to show expenses by category code for each Specification Chapter as follows:

a. Category 1: Consumables, repair parts, and minor equipment replacements.

b. Category 2: Major equipment/facility overhauls, repairs, maintenance, or replacements, as well as new equipment/facilities which provide a new capability or significant enhancement (including cost reduction) of an existing capability.

c. Category 4: Acquisition of equipment/facilities/etc. for Range User or other customer-funded requirements (e.g. 800 Series Work Orders). See also Chapter I of this Specification.

The Federal Supply System budget shall be organized by Expense Elements (as defined in NUWCDIVNPTINST 7312.1 (Series)).

Budget estimates are required by 1 July (for procurements through the Federal Supply System) and by 31 July (for Open Purchases) of each year. Approved budgets will not be exceeded without the written consent of NUWC.

3. The Contractor shall develop and maintain centralized, up-to-date records, catalogs, indices, etc., for ready reference, identifying manufacturer's part numbers and/or specifications and sources of supply for all consumables, expendables, and components of AUTEC's systems, subsystems, equipment, and facilities which cannot be procured through the DoD/Navy/GSA supply systems.

4. The Contractor shall develop and maintain centralized, up-to-date records, indices, schedules, lists, etc., for ready reference, identifying DoD/Navy/GSA-available consumables, expendables, and items necessary to support maintenance and operation of AUTEC's systems, subsystems, equipment, and facilities.

5. The Contractor shall procure all material, equipment, supplies and services, required to operate and maintain AUTEC, in a timely and cost effective manner. The Contractor shall not procure any Hazardous Material (products, substances, etc.) which do not appear on AUTEC's (Hazardous Materials) Authorized Use List (AUL) (see also Chapter XXII(2) of this Specification). As required by 40 CFR Parts 247-253 and DoN Memorandum, Affirmative Procurement Program, dated 5 September 1996, the Contractor shall maximize the procurement of goods manufactured from recovered materials. The Contractor shall remain cognizant of the types of such goods as designated in the EPA's Recovered Materials Advisory Notice (Federal Register: May 1, 1995 (Volume 60, Number 83, pages 21385-21394)) (which also contains an Internet address (http://www.epa.gov) and instructions for updated listings). The Contractor shall maintain a record, by Government Fiscal Year, of: all purchases of the types of goods designated; whether the goods actually purchased did or did not conform to the EPA's recommended recovered materials content; if not, why not; and the dollar value of all such goods purchased. Such records shall be retained for five years. See also Chapter XXII(2) of this Specification. Decisions to procure by open purchase or from Federal Supply/GSA System shall be based on total cost as well as delivery requirements. Total cost will consider warehousing (on ASD) and land and ocean shipping expenses in addition to acquisition cost. Currently the cost of shipping Federal

Supply-procured material via the Defense Transportation Service is paid for by the Defense Logistic Agency (i.e. the cost of shipping is included in the acquisition cost). Shipping of open purchase material via Defense Transportation Service-contracted ocean carrier is an added expense to AUTEC which is charged, via NAVTRANS Billing Reports, to the AUTEC Project. The Contractor shall maintain current knowledge of Defense Transportation Service shipping costs and policies in order to make cost-effective procurement decisions.

6. Procurements shall be initiated, controlled, and documented in accordance with Federal Acquisition Regulations and other Applicable Documents cited in paragraph F. All Category 1 procurement actions with a cost greater than $2,500, and all Category 2, 3, and 4 (see also Chapter I of this Specification) procurement actions regardless of cost shall be submitted for NUWC approval prior to obligation of funds. Copies of procurement actions less than $2,500 shall be submitted to NUWC daily.

Due to the criticality of aircraft operations to the AUTEC Project and the need to restore aircraft to operational capability as quickly as possible, the Contractor shall provide a dedicated Aviation Buyer to be located at the Contractor's Fixed Wing Air Operations Facility at the Palm Beach International Airport (see Section H, para H-19, of this Contract). The Aviation Buyer shall ensure that the unique requirements associated with purchasing aircraft parts are in compliance with both the FAA's Bogus Parts Program and Federal Acquisition Regulations. The Aviation Buyer shall procure parts and services in a timely and cost-effective manner as necessary to support the entire Air Operations requirement, both fixed and rotary-wing (see Chapters XIX(1) and XIX(2) of this Specification).

7. The Contractor shall, when obtaining goods or services through open purchase, be responsible for providing explicit specifications, obtaining bids, conducting technical and cost

evaluation(s), qualification of source(s) (as appropriate), and the preparation/conduct of receipt inspection(s) and subsequent acceptance/rejection.

When procuring outside services which are to be performed at AUTEC, the Contractor shall comply with the requirements of 29 CFR Part 1910.1200 to provide relevant AUTEC HAZCOM information to the vendor's employees. Similarly, if the use of any Hazardous Materials will be required in performance of the procured service(s), the Contractor shall specifically stipulate/require vendor compliance with all relevant provisions of the Occupational Safety (including provision of HAZCOM information for AUTEC personnel) and Environmental Quality Protection (including proper Hazardous Materials storage, control, etc.) requirements described in Chapters XXII (1) and XXII (2) of this Specification.

8. AUTEC's assigned Force Priority Designator normally limits requisitions from the DoD/Navy Supply Systems to Priority 7, 9, or 14. Priority 3 may be utilized, if justified, subsequent to authorization from the assigned U.S. Navy Supply Officer. The Contractor shall, when authorized to procure items under a Priority 3 requisition, prepare the appropriate message requests.

9. The Contractor shall maintain records as appropriate to identify all items procured which are guaranteed/warranted by the manufacturer and/or supplier. Such records shall be maintained for the stated guarantee/warranty period. The Contractor shall not perform any modification or repair of such items which would violate any stipulations made by the manufacturer or supplier in such regard. The Contractor shall, instead, hold the manufacturer and/or supplier responsible for the performance of any repair/replacement of such items during the stated period.

10. The Contractor shall control, operate, and maintain all of AUTEC's supply warehouses and other supply storage areas and facilities. See Chapter IX(1) of this Specification as regards magazines, storage lockers, and ready service lockers for explosives and pyrotechnic devices. The Contractor shall allow Range User personnel, as delineated in specific ODs, access to the Sonobouy Locker (AUTEC Facility 1032), located at the heliport at Site 1 on Andros Island. Fleet personnel will have access only to the northern bay.

11. The Contractor shall maintain detailed records, in accordance with instructions contained in the Applicable Documents cited in paragraph F, of all items and goods ordered, received, and issued including: applicable dates; identifying order number;

DoD/Navy/GSA (if appropriate) stock number; ordering/requesting organization/individual; priority; quantity/amount; cost; applicable work order number; source; reason for procurement (justification); approvals; etc.

12. The Contractor shall inspect all items upon receipt to ensure serviceability. If ordered for inventory, items shall, as necessary, be properly preserved and packaged/re-packaged for storage. Material received from Government sources in

damaged/unservicable condition shall be reported and handled in accordance with the procedures and requirements of NAVSUPINST 4440.120 (Series). Items damaged while being transported by the Military Traffic Management Command or MSC shall be reported and processed in accordance with the procedures and requirements contained in NAVSUPINST 4610.33 (Series). Damaged items received from commercial sources shall be returned to the vendor. Warehouses/storage areas shall be operated as Controlled Issue Points. The Contractor shall provide inventory control and management for such areas.

13. The Contractor shall develop and maintain an inventory of consumables, repair parts, and other material required to operate and maintain AUTEC facilities/equipment and to support personnel. Inventory levels and practices shall be in accordance with FAR, DFAR, NAPS, and sound commercial business policy. Stocking decisions shall be based on mission criticality, demand history, procurement and shipping lead time, and available storage space. Inventory items showing no demand for a period of three years shall be screened annually by the requiring work center or other competent authority or as otherwise specified by AUTEC's Government Property Administrator to determine if the item may be purged from inventory.

The Contractor shall establish a Bench Stock Program for pre-expended material, or material directly ordered by the work center, which is to be stored in the various work centers. This material is a nominal one-month supply of consumables and routinely used maintenance items; or "Ready Spares" repair parts which for some reason are more effectively stored at the work center. Policy and procedures for the Bench Stock Program must be documented by the Contractor and approved by NUWC. The program shall require, as a minimum, an annual inventory and maintenance of consumption data.

14. No materials, supplies, or equipment (personal or otherwise) imported duty-exempt by the Contractor shall find their way into the Bahamian economy without first having import duties paid thereon. No materials, supplies, or equipment, including: scrap; waste; excess; damaged; or rejected items shall be removed from the AUTEC sites for any reason without the written consent of NUWC. Requests for consent must contain evidence that customs duties have been paid, or shall contain a firm schedule for removal from the Commonwealth of the Bahamas (as applicable). The Contractor shall ensure that all personnel are properly

instructed in matters relating to customs, immigration, and importation. Section J, Attachment (2) of this document refers.

15. The Contractor shall be responsible for properly manifesting all materials, supplies, equipment, etc. (personal or otherwise) bound for or returning from Andros Island, and shall provide liaison with customs and immigration personnel and ensure compliance with applicable customs and immigration laws and regulations, both of the United States and of the Commonwealth of the Bahama Islands. Hazardous materials or items and hazardous waste shall be identified, labeled, handled, stored, prepared for shipment, manifested, transported and disposed of in accordance with the requirements cited in Chapter XXII(2) of this Specification.

16. The Contractor shall provide representation at Port Canaveral, FL, to perform coordination and liaison duties with personnel of the U.S. Army Military Transportation Management Command, U.S. Air Force, Military Sealift Command, Naval Ordnance Technical Unit, and others concerning the shipment of goods and materials to/from AUTEC's Andros Island facilities. This shall include inspecting and reporting the condition of material delivered by vendors for shipment and checking the refrigerated containers aboard the MSC barge prior to loading them.

17. The Contractor shall be responsible for performing shipping and receiving functions, including the preparation of bills of lading, cargo manifests, shipping and receipt documents, packaging, marking, and maintaining requisite records, in accordance with instructions contained in the Applicable Documents cited in paragraph F, at AUTEC's West Palm Beach, FL, and Andros Island facilities, and elsewhere as discussed within this Specification.

18. The Contractor shall be responsible for promptly returning identified depot-level repairable, mandatory turn-in, not ready for issue, and other similar items to the Federal Supply System/designated activity and assuring that proper records are kept and that proper credit for the return is received.

19. The Contractor shall ensure proper treatment of items identified as requiring special handling, per NAVSUP Publication P-4105, or storage, such as pyrotechnics and explosives, per NAVSEA OP-5. The Contractor shall assure that all personnel

assigned to handle, store, issue, or otherwise work with explosives or pyrotechnic devices are trained, tested, and certified in accordance with the requirements cited in Chapter IX(1) of this Specification. The Contractor shall maintain a record of all such training and certifications received by each individual. Personnel who have not been so certified shall not be permitted to conduct operations without supervision.

20. The Contractor shall ensure that items identified as having limited or stated shelf life and/or an expiration date are used in chronological order and that any such items are returned or disposed of (as appropriate) once such shelf life or expiration date has been reached.

21. The Contractor shall develop, and provide to NUWC and to the PCO, a written "Make or Buy" policy.

22. The Contractor shall provide for the orderly and expeditious loading, unloading, transfer, storage, and movement of all supplies, cargo, and materials, to and from: AUTEC's West Palm Beach, FL, Headquarters; AUTEC's Main Base (Site 1) on Andros Island; and between AUTEC's various Andros Island sites and facilities. Mail and other high priority cargo (as will fit) shall be transported daily aboard the Contractor's aircraft. Such services will also be provided at the Palm Beach (FL) International Airport and occasionally at the Port of Palm Beach (FL). See also Chapters XVIII, XIX(1), and XIX(2) of this Specification. The Contractor shall provide additional warehousing facilities, as described in Section H, Special Contract Requirements, for temporary storage of items/material bound to/from Andros Island. The cost of such facilities will be an allowable expense under this contract.

23. The Contractor shall provide for the orderly and expeditious movement of personnel to/from Andros Island, as approved by NUWC, and between AUTEC's various Andros Island sites. See also Chapters XVIII, XIX(1), and XIX(2) of this Specification. Such services to/from other locations may periodically be required by NUWC.

24. The Contractor shall provide for mail handling both at AUTEC's West Palm Beach (FL) Headquarters, and at Site 1 on Andros Island. Each day, weekends and holidays excluded, U.S. mail is to be picked up at the West Palm Beach (FL) U.S. Post Office, and guard mail is to be picked up at AUTEC's West Palm Beach Headquarters. All Mail is to be delivered for shipment to Andros Island on the Contractor's scheduled morning flight (see Chapter XIX(1) of this Specification). Upon arrival at Andros

Town Airport mail is to be picked-up and delivered to the U.S. Navy Post Office at Site 1. On Saturdays and holidays, only guard mail is to be picked up from AUTEC's West Palm Beach Headquarters and delivered directly to the Navy Administration Building at Site 1 and sorted. Outgoing Andros mail is to be handled similarly; it shall be returned to CONUS on the Contractor's scheduled afternoon flight, and delivered daily to the West Palm Beach U.S. Post Office or to AUTEC's West Palm Beach Headquarters as appropriate.

The Contractor shall provide for internal distribution and pick-up of mail at both facilities. Appropriate security guidelines shall be observed (see also Chapter XXIII of this Specification).

25. The Contractor shall be responsible for arranging the transportation of household goods (HHGs) belonging to Government personnel transferring to/from Andros Island, using Household Good Vans (e.g. containers) provided by the Government. The Contractor shall maintain such vans in ready-for-use condition, and shall be responsible for ensuring their weather tightness, marking/identification, and delivery/pick-up.

26. The Contractor shall maintain accurate inventory records and conduct physical inventories as required by the FAR. All stocked items will be inventoried at least annually. High usage items may require more frequent inventories to avoid stock outages. Inventories shall be conducted in such a manner that they do not interfere with daily supply operations. Inventories shall be reported in accordance with procedures approved by the AUTEC's Government Property Administrator. A complete inventory shall be conducted upon assumption of responsibility and upon completion, or termination, of this contract, or as agreed to or required by AUTEC's Government Property Administrator.

27. The Contractor shall maintain accurate records of all Government Property entrusted to the Contractor for custodial control. As required by FAR 45.5, DFAR Supplement 245.5, and NAPS 45.5, annually, or upon change of responsible custodian, or as may otherwise be required by AUTEC's Government Property Administrator, the Contractor shall report the acquisition cost of property and facilities using DD Form 1662.

28. The Contractor shall promptly report all cases of missing, lost, damaged, destroyed, stolen, or recovered Government Property in accordance with SECNAVINST 5500.4 (Series).

29. The Contractor shall collect data, maintain records, and prepare/submit reports as may be required by the Applicable

Documents cited in paragraph F, including: Conventional Ammunition Integrated Management System (CAIMS) reports per CINCLANTFLTINST 8010.12 (series), SPCCINST P8010.2 (series), and NAVAIR 11-1-16B/TWO10-AA-ORD. The Contractor shall respond promptly to any special requests for data/reports.

30. The Contractor shall be responsible for properly identifying, marking, packaging, and disposing of all non-hazardous scrap, waste, and excess material and property in accordance with procedures and requirements contained in the NAVCOMPT Manual and relevant Applicable Documents cited in paragraph F and upon approval by NUWC. See also Chapter XX(2) of this Specification.

31. The Contractor shall be responsible for the procurement, control, identification, marking, packaging, and storing of Hazardous Materials and subsequent disposal of Hazardous Waste in accordance with the procedures contained in Chapter XXII(2) of this Specification.

32. The Contractor shall maintain records of any service or usage fees collected, as well as monies collected for materials, goods, food, supplies, fuels, or lubricants, etc., sold as allowed under this contract. The recouped monies shall be returned to the Government as a credit against allowable costs incurred by the Contractor, and reported as a Cost Recovery in the monthly Cost Control Report. (See Chapter XXV of this Specification).

33. The Contractor shall submit all NUWC-required technical and administrative reports, described in Chapter XXV of this Specification, as pertain to support of AUTEC's supply, inventory, and property control functions.

## D. WORKLOAD FACTORS

1. Estimated monthly procurement actions:

   a. Open purchases (nominal two line items per.):
      Average 450; Peak 500 (twice per year).

b. MILSTRIPs (nominal one line item per.): Average 400; Peak 600 (twice per year).

2. Estimated number of Government Property items: 14,000.

3. Estimated number of item-types in inventory: 20,000.

4. Estimated average amount of material moved monthly to/from Andros Island:

a. Mail WPB to ASD: 7 tons.

b. Mail ASD to WPB: 1.5 tons.

c. Cargo (via MSC) PCAN to ASD: Average 500 tons; Peak 1,000 tons (twice per year).

d. Cargo (via MSC) ASD to PCAN: Average 120 tons; Peak 250 tons (twice per year).

e. Cargo to/from ASD via C-130 or charter aircraft: 15 tons.

5. Site 2 is the only Andros Island site that can be reached by land from Site 1. Other sites must be re-supplied via air or sea. Average number of tons of material moved downrange each month: 250 (includes consumables, materials, water, vehicles/equipment, etc.).

6. Approximately 40 shipments of HHGs either to or from Andros belonging to Government personnel will be required annually. Annual HHG shipments to or from Andros belonging to Contractor employees are directly related to personnel attrition/replacement and cannot be estimated by the Government.

## E. KEY PERSONNEL/PERSONNEL QUALIFICATIONS:

1. Key Personnel: None.

2. Personnel Qualifications:

a. **Procurement Personnel:** To successfully execute the tasks and responsibilities described, the persons assigned should have direct experience, and be thoroughly familiar

with the DoD/Navy/GSA supply systems' regulations, functions, requirements, and procedures and the FAR acquisition regulations.

b. **Property Control Personnel:** To successfully execute the tasks and responsibilities described, the persons assigned should have direct experience, and be thoroughly familiar with FAR, DFAR and NAPS property control regulations, requirements, and procedures.

c. **Shipping/Receiving Personnel:** To successfully execute the tasks and responsibilities described, the persons assigned should have direct experience, and be thoroughly familiar with DoD/Navy shipping/receiving regulations, functions, requirements, and procedures.

d. **Explosives/Pyrotechnics Warehousing Personnel:** To successfully execute the tasks and responsibilities described, the persons assigned to handle, store, issue or who otherwise directly work with explosives, pyrotechnics or other items requiring special handling should have direct experience, and be thoroughly familiar with related DoD safety regulations, requirements, and procedures, and be certified in accordance with the requirements of OCD-(09.1)-02-XX.

## F. APPLICABLE DOCUMENTS

| | |
|---|---|
| 29 Code of Federal Regulations (CFR) Part 1910.1200; | Hazard Communications |
| 40 CFR Parts 247-253; | Affirmative Procurement |
| FAR (Federal Acquisition Regulations) | |
| DFAR (Defense Federal Acquisition Regulations) | |
| NAPS (Navy Acquisition Procedures Supplement) | |
| DoD Regulation 4500.32; | Military Standard Transportation and Movement Practices, Vols. I and II |
| DoD Manual 4160.21; | Defense Utilization and Marketing Manual (DoD Disposal Manual) |
| DoD Memorandum, dtd 5 Sept 1996; | Department of the Navy Affirmative Procurement Program for Items Containing Recovered Materials |

| | |
|---|---|
| SECNAVINST 5500.4 (series); | Reporting of Missing, Lost, Stolen, or Recovered Government Property |
| NAVSUP Publication P-284; | Storage and Material Handling |

- - - - - *deleted* - - - - -

| | |
|---|---|
| NAVSUP Publication P-485 Vol III | Ashore Supply |
| Naval Logistics Library CD | Set of 3 CD's (Updated Quarterly) |
| Defense Logistics Agency FedLog (Federal Logistics Data on Compact Disc) CD | Set of 4 CD's (Updated Monthly) |
| NUWCDIVNPTINST 7312.1 (Series); | Promulgation of Cost/Expense Elements |

| | |
|---|---|
| NAVSUP Publication 505; | Preparation of Hazardous Materials for Air Shipment |
| NAVSUP Publication P-4105; | Items Requiring Special Handling |
| NAVSUP Publication P-4107; | Master Item Repairable List |
| NAVSUPINST 4440.120 (Series); | Reporting of Quality Deficient Materials Obtained Through the Supply System |
| NAVSUPINST 4440.128 (Series); | Storage and Handling of Compressed Gases and Gas Cylinders |
| NAVSUPINST 4600.70 (Series); | Transportation and Travel - Military Traffic Management Requisitions |
| NAVSUPINST 4610.33 (Series); | Transportation and Travel - Reporting of Transportation Discrepancies in Shipment |
| NAVSEA OP-5; | Ammunition and Explosives Ashore Safety Regulations for Handling, Storing, Production, Renovation, and Shipping |
| NAVSEA SW 020-AC-SAF 010/020/030; | Transportation and Storage Data for Ammunition, Explosives, and Related Hazardous Materials |
| OPNAVINST 5090.2 (Series); | Management of Ozone Depleting Substances |
| SPCCINST P8010.12 (Series); | Supply Management of Ammunition; Policy, Procedures, and Responsibilities |
| CINCLANTFLTINST 8010.12 (Series); | Atlantic Fleet Conventional Ordnance Management Plan |
| NAVAIR 11-1-16B/ TW010-AA-ORD; | Navy Ammunition Logistics Code |
| NUWCINST 7312.1 (Series); | Promulgation of Cost/Expense Elements |
| OCD-(09.1)-02-XX; | Explosives Handling/Transporting Training and Qualification/Certification Program |

OCD-(21.1)-04-XX; Cargo Handling and Movement

| | |
|---|---|
| OCD-(21.1)-13-XX; | Air/Marine Cargo Shipment |
| OCD-(21.1)-15-XX; | Electronic Equipment Control |
| OCD-(21.1)-33-XX; | WPB Supply Storeroom Operations |
| OCD-(18)-04-XX; | Procedure for Leasing of a Vessel |
| Other OCDs; | Relevant/Related OCDs as may be listed in Table XV-4 |
| APP 1-92G; | Customs and Immigration - AUTEC Personnel |
| APP 4-18G; | Security and Boarding Procedures for Aircraft Passengers and Baggage |
| APP 4-21G; | Mass Casualty Plan |
| APP 6-25G; | Sole Source Procurements Requested by Government Personnel |
| APP 7-8G; | Gasoline, Fuel Oils and Lubricants: Consumption and Control |
| APP 7-11G; | Use and Control of GSA and Navy-owned Vehicles - AUTEC Project |
| APP 7-15G; | Shipment of Personal Property |
| APP 8-14G; | Fixed-Wing Passenger/Cargo Transportation |
| APP 8-27G; | Community Support Missions |
| APP 8-32G; | Emergency Shipment of Handcarry Cargo on Sunday and Holiday Flights |
| APP 8-36G; | Self-Help Projects |
| APP 8-43G; | Additional Fixed-Wing Aircraft Flights for Official AUTEC Requirements |
| APP 8-44G; | Lost, Abandoned, or Unclaimed Privately Owned Property |

| | |
|---|---|
| APP 11-3G; | Fire Protection Policy |
| APP 11-5G; | Hurricane Plan, Andros Island |
| APP 11-8G; | Hazardous Materials Control and Management Program |
| APP 11-13G; | Hazardous Waste Management Policy |

AUTEC Supply Warehousing Guide

AUTEC Pollution Prevention (P2) Plan

# XXI. LOGISTICS (CONT.)

## 2. HOUSING

### A. GENERAL

Housing at AUTEC'S Andros Island sites is provided for both transient and permanent party Government and Contractor personnel. All housing at AUTEC, Andros Island is U.S. Government owned. Housing facilities are primarily Unaccompanied Personnel Housing (UPH). However, there is a limited number of Family Housing Units.

### B. DESCRIPTION

Housing facilities at the various sites on Andros Island consist of a variety of trailers and permanent structures. The amount of accompanied, or "family" housing is very limited, and none exists except at Site 1. The transient quarters, and those occupied by unaccompanied Government personnel, are operated in accordance with Navy regulations as described in the Applicable Documents cited in paragraph F. Family Housing and Contractor occupied quarters are operated in accordance with Contractor established procedures. Table XXI-1 provides a representative list of Andros housing units and their current allocation to Government and Contractor personnel. Actual inventory is provided by NUWC.

### C. CONTRACTOR RESPONSIBILITIES

1. The Contractor shall support AUTEC's housing function in accordance with the AUTEC Schedule of Operations, Workload Factors given in paragraph D, Applicable Documents cited in paragraph F, and other requirements stated below. Special requirements may be tasked by NUWC Work Order or Letter of Direction.

2. The Contractor shall control and schedule the assignment of all permanent Government, Contractor, and Subcontractor personnel to appropriate housing. Double occupancy will be minimized to the greatest possible extent.

3. The Contractor shall maintain and operate Contractor-assigned quarters in a manner which: enhances employee morale and retention; ensures proper health, safety, and sanitary conditions; and ensures protection and care of Government property. The Contractor shall follow energy management guidelines for heating/cooling/lighting/and domestic hot water systems as contained in OPNAVINST 4100.5 (Series). The Contractor shall develop appropriate procedures governing the operation of Contractor assigned quarters and submit them to NUWC for approval.

4. The Contractor shall maintain and operate housing for unaccompanied Government personnel and the transient quarters in accordance with applicable provisions of OPNAVINST 11103.1 (Series) and NAVPERS 15606. Double occupancy shall be minimized to the maximum extent possible.

5. The Contractor shall provide the following:

a. Janitorial Service for all "common spaces" in all housing areas.

b. Maid and janitorial services for transient quarters.

6. "Family" quarters occupied by Government personnel shall be maintained and operated in a similar manner to those occupied by Contractor personnel. Any deviations will be specified/approved by NUWC.

7. The Contractor shall collect rent for "family housing" and contractor-occupied duplex trailer units at the rates specified below, or as may be periodically re-established by NUWC. Such payments shall be returned to the Government and reported in the monthly Cost Control Report (see Chapters XXI(1) and XXV of this Specification).

| Family Housing Units: | Monthly Rent |
|---|---|
| 12 foot wide units: | |
| 3-Bedroom | $165.00 |

| Family Housing Units: | Monthly Rent |
|---|---|
| 24 foot wide units: | |
| 2-Bedroom | $225.00 |
| 3-Bedroom | $265.00 |

| Duplex Trailer Units: | Monthly Rent |
|---|---|
| 1-Bedroom | $110.00 |

8. The Contractor shall schedule daily use of, and assignments to, transient quarters, subject to approval by NUWC. Transient rooms shall be designated as Smoking/Non-Smoking. Room assignments shall consider the preference of the visitors when possible. The Contractor shall maintain a list of room assignments accessible through AUTEC'S central telephone switchboard (see Chapter VII (1) of this Specification) to facilitate routing of in-coming telephone calls.

9. The Contractor shall collect per diem payment of fees for use of transient quarters. The amount of such fee(s) will be established periodically by NUWC. The Contractor shall be prepared to accept payment for such fees in the form of personal checks, credit cards, and cash, and to issue an appropriate receipt. Such fees shall be returned to the Government and reported in the monthly Cost Control Report (see Chapters XXI(1) and XXV of this Specification).

10. The Contractor shall inspect all housing units at least quarterly to ensure that living conditions are safe, that general housekeeping is satisfactory, and to ensure that occupants are taking reasonable care of Government property.

11. The Contractor shall collect data, maintain records, and prepare/submit all housing-related reports as may be required by the Applicable Documents cited in paragraph F. The Contractor shall assist NUWC in the conduct of any housing-related inspections, surveys, audits, etc. required/conducted by outside authority. The Contractor shall respond promptly to any special request for data/reports.

12. General upkeep and yard care of "family" quarters shall be the responsibility of the occupants. Corrective maintenance/repair shall be the responsibility of the Contractor (except that the Contractor may implement a program to allow occupants to perform limited repair/maintenance actions as discussed in Chapter XX(1) of this Specification), as shall the upkeep and yard care of unoccupied "family" quarters.

13. The Contractor shall develop and maintain an inventory of Government-provided consumables, expendables, and repair/spare parts to support AUTEC'S housing facilities in accordance with the policies provided in Chapter XXI(1) of this Specification.

14. The Contractor shall submit all NUWC-required technical and administrative reports, described in Chapter XXV of this Specification, as pertain to support of AUTEC'S housing program.

D. **WORKLOAD FACTORS**

1. Site 1 Housing Summary:

   a. Transient quarters total 215 individual units. An average daily loading of 120 transient personnel may be expected with daily peaks of up to 200 several times a year.

   b. A total of 51 housing units are available for unaccompanied Government personnel.

   c. A total of 415 housing units are available for unaccompanied Contractor personnel.

   d. A total of 62 "family trailers" are available for accompanied Government and Contractor personnel.

2. The following definitions apply:

   a. Maid Service Encompasses: cleaning/sanitizing bathrooms; vacuuming floors; making-up beds; dusting furnishings; emptying wastebaskets; providing clean towels and washcloths daily; stocking drinking cups, soap, and toilet paper daily; providing fresh bed linen weekly or when occupancy changes; etc. Weekends and holidays maid service is provision of clean towels and linen as necessary.

   b. Janitorial Service Encompasses: minor maintenance and upkeep; damp mopping, stripping and waxing floors; shampooing rugs; moving furniture; washing windows; emptying trash receptacles; wiping down/washing furniture; etc.

3. Maid service shall be provided every day for occupied transient rooms.

4. Janitorial service shall be provided:

   a. Monday through Friday (holidays excepted).

   b. On-Call during weekends and holidays.

5. Transient quarters shall be manned for check-in/check-out purposes 365 days per year during established work hours, and as required for off-duty hour arrivals. At least one person shall be on call during off-duty hours to assist residents (within 30 minutes).

## E. KEY PERSONNEL/PERSONNEL QUALIFICATIONS

None.

## F. APPLICABLE DOCUMENTS

| | |
|---|---|
| OPNAVINST 4100.5 (Series); | Energy Management |
| OPNAVINST 11103.1 (Series); | Adequacy, Assignment and Utilization of Bachelor Quarters (BQ) |
| NAVPERS 15606; | Navy Bachelor Quarters Manual |
| Other OCDs; | Relevant/Related OCDs as may be listed in Table XV-4 |
| APP 2-46G; | Housing Plan - Andros Island |
| APP 4-13G; | Key and Lock Control Program |
| APP 9-5G; | Inspection and Searches for Recovery of Property |
| APP 11-3G; | Fire Protection Policy |
| APP 11-5G; | Hurricane Plan, Andros Ranges |
| APP 11-13G; | Hazardous Waste Management Policy |

# ANDROS HOUSING UNITS

| LOCATION | DESCRIPTION | FACILITY No./TYPE | ASSIGNMENT CONTRACTOR | ASSIGNMENT NAVY/NUWC | ASSIGNMENT TRANSIENT |
|---|---|---|---|---|---|
| SITE 1 | Barracks | 1201 | - | - | 74 |
| | | 1204 | - | - | 127 |
| | | 1231 | 66 | 30 (NCF) | - |
| | | **Subtotal:** | **66** | **30** | **201** |
| | Concrete Block Housing | 1221 | - | 5 | 5 |
| | | 1222 | 1 | - | 19 |
| | | 1223-1227 | 100 | - | - |
| | | 1228 | 10 | 10(2NCF) | - |
| | | 1229 | 20 | - | - |
| | | 1230 | 20 | - | - |
| | | 1325 | 20 | - | - |
| | | 1326 | 20 | - | - |
| | | **Subtotal:** | **191** | **15** | **24** |
| | Trailers | Triplex | 72 | - | - |
| | | Duplex | 60 | - | - |
| | | **Subtotal:** | **132** | **0** | **0** |
| | Family Trailers | 2 Bedroom DW* | - | - | - |
| | | 3 Bedroom SW** | 40 | 8 | - |
| | | 3 Bedroom DW* | 9 | 6 | - |
| | | **Subtotal:** | **49** | **14** | **0** |
| | | **Total Site 1:** | **438** | **59** | **225** |

* DW = Double Wide (24 feet)
** SW = Single Wide (12 feet)

Table XXI - 1

## ANDROS HOUSING UNITS

| LOCATION | DESCRIPTION | FACILITY No./TYPE | ASSIGNMENT CONTRACTOR | ASSIGNMENT NAVY/NUWC | ASSIGNMENT TRANSIENT |
|---|---|---|---|---|---|
| SITE 2 | Barracks | 2001 | - | - | 4 |
| | | 2051 | 8 | - | - |
| | | **Total Site 2:** | **8** | **-** | **4** |
| SITE 3 | Trailers | Triplex | 8 | - | 4 |
| | | **Total Site 3:** | **8** | **-** | **4** |
| SITE 4 | Barracks | 4001 | - | - | 8 |
| | Trailers | Duplex | 5 | - | 1 |
| | | **Total Site 4:** | **5** | **-** | **9** |

Table XXI-1 (cont.)

*This page intentionally left blank*.

# XXI. LOGISTICS (CONT.)

## 3. LAUNDRY

### A. GENERAL

Central laundry facilities are provided at Site 1 on Andros Island to support both base operations and AUTEC personnel. Base operations support entails laundering bed linen for unaccompanied permanent housing rooms, towels and bed linen for transient housing rooms, and towels for the snack bar and mess halls; work uniforms are laundered for Security, Fire Department, food service, and other personnel.

### B. DESCRIPTION

The base laundry consists of a 2,721 square foot facility containing five 12 pound, two 100 pound, and one 50 pound industrial washing machines, and four 100 pound and one 70 pound industrial dryers. The dispensary and fire department are provided washing machines in their facilities to launder linen/uniforms which are potentially biologically contaminated. Additionally, laundry facilities are either located near or installed in AUTEC housing units for personal use by the occupants, and at the various downrange sites for use by assigned personnel.

### C. CONTRACTOR RESPONSIBILITIES

1. The Contractor shall man and operate the base laundry facility in accordance with the Workload Factors given in paragraph D, Applicable Documents cited in paragraph F, and other requirements stated below.

2. The Contractor shall maintain and operate AUTEC'S laundry facilities in accordance with the maintenance and operation instructions provided by the manufacturers.

3. The general approach to corrective maintenance is that it shall be performed by the Contractor. The Contractor shall arrange for manufacturer or procured support for specific tasks on a case-by-case basis considering cost effectiveness and other requirements as approved by NUWC.

4. The Contractor shall develop and maintain an inventory of Government-provided consumables, expendables, and repair/spare parts to support AUTEC's laundry facilities in accordance with the policies provided in Chapter XXI(1) of this Specification.

5. The Contractor may offer to provide laundry/cleaning services for Andros-based and/or transient individuals on a not to interfere basis. The cost of such services are not re-imbursable under this contract. If the Contractor so decides to offer such services, fees must be developed so that customers pay the full cost. Such fees must be approved in writing by the Government. The Contractor shall collect the established fees. Such fees shall be returned to the Government and reported in the monthly Cost Control Report (see Chapters XXI(1) and XXV of this Specification).

6. The Contractor shall submit all NUWC-required technical and administrative reports, described in Chapter XXV of this Specification, as pertain to operation of AUTEC'S laundry facilities.

## D. WORKLOAD FACTORS

1. Uniform changes shall be provided daily for food service personnel. Others shall be as required.

2. Unaccompanied permanent party personnel shall receive clean bed linens weekly.

3. For transient quarters, clean towels shall be provided daily, and clean bed linens shall be provided weekly or upon a change of occupancy.

4. An estimated average of 10,000 articles (towels, sheets, etc.) including 400 work uniforms are laundered each month.

## E. KEY PERSONNEL/PERSONNEL QUALIFICATIONS

None.

## F. APPLICABLE DOCUMENTS

None.

# XXI. LOGISTICS (CONT.)

## 4. FOOD SERVICE

### A. GENERAL

Food service and related messing facilities are provided to support all permanent and transient personnel at AUTEC's Andros Island sites. Food is also provided to range vessels for extended underway operations and may be sold to the recreational and retail facilities described in Chapter XXVII of this Specification.

### B. DESCRIPTION

AUTEC's Andros Island messing facilities include one 75-person full-service dining room and one 400 person cafeteria-style Main Mess facility at Site 1. Additionally, a messing facility is provided at each of the downrange sites. Small kitchens are provided at the power plant and fire/security for shift personnel. Range vessel galleys are provisioned for meal service for underway periods. Food Service encompasses procuring food, planning menus, preparing and serving food, as well as attendant scullery operations and cleaning of messing/food storage spaces. Box lunches and/or meals are provided to those personnel who cannot leave operating stations. Food is normally shipped once a week, via MSC barge, from Port Canaveral, FL, (see also Chapter XXI(1) of this Specification).

The 75-person dining room is intended to provide a formal, restaurant-like alternative to the cafeteria-style Main Mess facility, for use by both resident and transient personnel. The 75-person dining room may, at times, be reserved by NUWC for special functions, or for entertaining visiting dignitaries (see Chapter IV (2) of this Specification). The dining room may be closed to all but invited guests during such times. Such events may occasionally be scheduled at times other than normal meal hours.

Food storage facilities at Site 1 include: 3,751 square feet of dry commodity space; 2,880 square feet of chilled commodity space; and 2,400 square feet of frozen food storage space. Additional space of various types is also provided within the Main Mess and 75-person dining room buildings.

Contractor/Subcontractor personnel assigned to AUTEC's Andros Island sites/facilities eat at no charge. Assigned Government personnel, and all transient personnel, are charged directly for meals consumed; except those riding AUTEC range vessels, where the cost of meals will be charged to the appropriate test/work order number. Meal charges shall be the same regardless of where the meals are eaten.

## C. CONTRACTOR RESPONSIBILITIES

1. The Contractor shall provide food service support in accordance with the AUTEC Schedule of Operations, published Operations Directives, Workload Factors given in paragraph D, Applicable Documents cited in paragraph F, and other requirements stated below. Special requirements may be tasked by NUWC Work Order or Letter of Direction.

2. The Contractor shall plan menus, procure and coordinate food shipments, and prepare meals at all AUTEC messing facilities. In addition, the Contractor shall provide a full-service wait staff for the 75-person dining room and prepare and deliver box lunches/meals to those personnel who cannot leave their operating stations. Meals shall be planned and prepared in a manner which enhances employee morale and retention and ensures proper nutrition.

3. The Contractor is responsible for maintaining, managing, controlling and distributing an adequate, on-going supply of food as required to meet the Workload Factors given in paragraph D and range vessel schedules as described in XVIII of this Specification.

4. The Contractor shall ensure that all food is shipped, stored, prepared, and served under proper sanitary conditions. The Contractor shall procure the services of a suitably qualified activity or individual to perform independent monthly inspections of AUTEC's food service facilities. Any cited deficiencies shall be promptly corrected. The Contractor shall submit a monthly report, with a narrative description of the results and actions taken relevant to each inspection, to NUWC. Reports are due the 10th working day of each successive month.

5. The Contractor shall exercise reasonable cost control in the planning of menus and purchasing of food items. The Contractor shall base meal-planning on record data indicating typical attendance at each meal.

6. NUWC will periodically establish meal fees to be charged appropriate personnel for use of AUTEC's messing facilities. The Contractor shall assess and collect such fees. Such fees shall be returned to the Government and reported in the monthly Cost Control Report (see Chapters XXI(1) and XXV of this Specification).

7. The Contractor shall maintain records of any food/beverage items procured for subsequent resale through the ARA recreational and retail activities as described in Chapter XXVII of this Specification. The Contractor shall collect reimbursement each month from the ARA for the cost of such items procured. Such reimbursements shall be returned to the Government and reported in the monthly Cost Control Report (see Chapters XXI(1) and XXV of this Specification).

8. The Contractor shall submit all NUWC-required technical and administrative reports, described in Chapter XXV of this Specification, as pertain to support of AUTEC's food service requirements.

## D. WORKLOAD FACTORS

1. The Contractor shall develop, and submit for NUWC approval, operating hours for the Site 1 messing facilities which represent the best compromise between convenience and economy of operations.

2. Meals will be prepared and served daily at AUTEC's downrange sites. Operating hours of these messing facilities are flexible.

3. Food shall be prepared in sufficient quantity to meet the needs of transient and permanently assigned personnel normally attending each meal at AUTEC's Andros Island facilities. Estimated number of meals served monthly is:

| Meal | Average | Peak* |
|---|---|---|
| Breakfast | 6,000 | 7,200 |
| Lunch | 15,000 | 18,000 |
| Dinner | 13,500 | 16,200 |

* Peak periods are expected during months when UK operations are scheduled (normally twice a year).

## E. KEY PERSONNEL/PERSONNEL QUALIFICATIONS

None.

## F. APPLICABLE DOCUMENTS

| | |
|---|---|
| Other OCDs; | Relevant/Related OCDs as may be listed in Table XV-4 |
| APP 11-5G; | Hurricane Plan, Andros Ranges |

# XXI. LOGISTICS (CONT.)

## 5. MEDICAL/DENTAL

### A. GENERAL

The remote location of AUTEC's Andros Island facility, and the limited health services available locally, dictate the need for medical care to be made available on-base for both permanent and transient personnel.

### B. DESCRIPTION

The medical facility provided at Site 1 on Andros Island includes a dispensary equipped to support the need for routine medical care, the treatment of minor injuries, and stabilization of patients requiring evacuation to CONUS for treatment of serious conditions. The dispensary contains a fully equipped trauma room, a two bed sick bay, a medical supply room, a treatment room, a small pharmacy, and offices. Laboratory work is accomplished by air-shipment of samples to CONUS. A representative list of dispensary medical equipment is presented in Table XXI-2. Actual inventory is as provided by NUWC.

Medical personnel must meet requirements, established by the Navy, for practicing in Naval facilities. Specifically, all medical doctors must be privileged and credentialed in accordance with BUMEDINST 6320.66 (series), and all nurses must be licensed in accordance with SECNAVINST 6401.2 (series).

The Contractor may arrange for dental care to be provided for Contractor, Civil Service, and other civilian personnel on a periodic basis. Any dental care for U.S. military members must be restricted to emergency treatment.

A dental operating room is available for use by the Contractor, however, dental treatment/supplies are not allowable costs under this contract.

### C. CONTRACTOR RESPONSIBILITIES

1. The Contractor shall provide medical support services for AUTEC in accordance with the Workload Factors given in paragraph D, Applicable Documents cited in paragraph F, and other requirements stated below. Special requirements may be tasked by NUWC Work Order or Letter of Direction.

2. The Contractor shall maintain, check-out, calibrate, and operate all medical equipment in accordance with the standards and procedures delineated in maintenance and operation manuals

provided by the manufacturer and, as applicable, NAVMEDCOMINST 6470.6 (series).

3. The general approach to both preventative and corrective maintenance is that it shall be performed by the Contractor. The Contractor may arrange for manufacturer or other procured support of medical equipment on a case-by-case basis considering cost effectiveness and other requirements as approved by NUWC.

4. The Contractor shall provide the full-time services of a medical doctor, with trauma specialty, at Site 1 on Andros Island. The doctor and any temporary replacement(s) shall be privileged and credentialed in accordance with BUMEDINST 6320.66 (series).

5. The Contractor shall provide two registered nurses, licensed in accordance with SECNAVINST 6401.2 (series), at Site 1 on Andros Island.

6. The Contractor may provide the services of a dentist and oral hygienist. Subject to the restrictions stated, the Contractor may utilize the facilities provided by the Government, and collect fees to cover the costs of such service. The Contractor must procure any necessary labor, supplies, consumables, etc. at no cost to the Government.

7. The Contractor shall provide routine medical care and treatment services during scheduled sick-call hours. Recurrent routine medical care or treatment services will not be provided for visitors, transient personnel, or other individuals not permanently assigned to AUTEC's Andros Island facilities. Cases of serious illness will be referred to CONUS physicians. In cases of medical emergency, the Contractor shall, as deemed appropriate by the doctor, attempt to stabilize the patient and arrange for medical evacuation as soon as is possible.

8. The Contractor shall establish, implement, and adhere to, a medical care Risk Management and Quality Assurance Program as required by BUMEDINST 6010.13 (Series).

9. The Contractor shall collect data, maintain records, and prepare/submit reports as may be required by the Applicable Documents listed in paragraph F. The Contractor shall assist NUWC in the conduct of any medical inspections, surveys, audits, etc. required/conducted by outside authority. The Contractor shall respond promptly to any special requests for data/reports.

10. The Contractor shall provide for safe and timely air-shipment of medical samples to CONUS for analysis as may be required. The Contractor shall arrange for the procurement of qualified support services to perform such analysis in an accurate, timely, and cost effective manner.

11. The Contractor shall develop and maintain an inventory of prescription drugs and medicines, medical equipment, and consumable medical supplies, as would be prudent for the operation of a dispensary serving the routine and emergency-treatment medical needs of a remote facility such as AUTEC. Such items shall be stocked at the dispensary. Medical personnel shall be responsible for maintaining accurate inventory/dispensing/disposal records for accountability purposes. For controlled substances the Contractor shall follow the guidelines contained in NAVMEDCOMINST 6710.9 (series). The Contractor shall stock non-prescription drugs and other medical sundries in the retail store (see Chapter XXVII of this Specification) and will not normally issue such items from the dispensary.

12. The Contractor shall be responsible for the control, management, and disposal of medical waste in accordance with requirements contained in The Final Governing Standards for Andros Island. See also Chapter XXII (2) of this Specification.

13. The Contractor shall maintain and submit "Records of Occupation Exposure to Ionizing Radiation" in accordance with NAVMED P-5055.

14. The Contractor shall periodically inventory the contents of all first-aid kits and similar emergency medical stores and equipment located aboard AUTEC`s vessels, emergency response vehicles, aircraft, and in various buildings ashore. Missing and/or out-dated items shall be replaced. The Contractor shall ensure that on-site personnel; as deemed sufficient to respond to an emergency, are properly trained in the administration of first-aid and in the use of items supplied.

15. The Contractor shall provide medical staff personnel to accompany patients being evacuated to CONUS as dictated by the seriousness of the patient's condition.

16. The Contractor shall file "Disease Alert Reports" when required by the guidelines in NAVMEDCOMINST 6220.2 (Series).

17. The Contractor shall submit all NUWC-required technical and administrative reports, described in Chapter XXV of this Specification, as pertain to support of AUTEC's medical program.

## D. WORKLOAD FACTORS

1. As a minimum, the dispensary shall be staffed, and sick-call held, during the hours of 0800 to 1000 and 1300 to 1400, Monday through Friday, holidays excepted.

2. An estimated average of approximately 25 persons per day attend sick-call.

3. One doctor and one nurse shall be on-call, and immediately available, 24 hours per day, 365 days per year, to provide emergency medical care, at Site 1 on Andros Island.

4. Medical emergencies are an as-occurring workload.

## E. KEY PERSONNEL/PERSONNEL QUALIFICATIONS

None.

## F. APPLICABLE DOCUMENTS

| | |
|---|---|
| Final Governing Standards for Andros Island; | Prepared by Commander in Chief, U.S. Atlantic Fleet (CINCLANTFLT) |
| SECNAVINST 6401.2 (Series); | Licensure and Certification of Health Care Providers |
| *- - - deleted - -* | |
| BUMEDINST 6320.66 (Series); | Credentials Review and Privileging Program |
| BUMEDINST 6010.13 (Series); | Quality Assurance (QA) Program |
| NAVMEDCOMINST 6220.2 (Series); | Disease Alert Reports |
| NAVMEDCOMINST 6470.6 (Series); | Radiation Protection Survey and Equipment Performance Test and Diagnostic X-ray Equipment |

JA1-554
N61339-97-C-0001
P00002

NAVMEDCOMINST 6710.9 (Series); Guidelines for Controlled Substances Inventory

JA1-554a
N61339-97-C-0001
P00001

NAVMED P-5055; Radiation Health Protection Manual

| | |
|---|---|
| Other OCDs; | Relevant/Related OCDs as may be listed in Table XV-4 |
| APP 2-109G; | Air Evacuation: Medical Emergencies and Deaths |
| APP 4-21G; | Mass Casualty Plan |
| APP 8-24G; | Admiralty Incident Reporting |
| APP 8-27G; | Community Support Missions |
| APP 11-5G; | Hurricane Plan, Andros Ranges |

- - - - - *deleted* - - - - -

| | |
|---|---|
| APP 11-12G; | Policy for AUTEC Bloodbourne Pathogens (BBP) Program |
| APP 11-13G; | Hazardous Waste Management Policy |
| APP 11-15G; | AUTEC Toxic Paint Policy |

AUTEC Dispensary Quality Improvement/Performance Improvement and Risk Management Program

AUTEC Installation Spill Control Plan

AUTEC Pest Management Plan

**AUTEC DISPENSARY**
**MEDICAL EQUIPMENT**

| Equipment | Mfr | Model No. | Qty |
|---|---|---|---|
| Aspirator Portable | ALLIED | 402 | 1 |
| Audiometer Microprocessor | TRACOR | RA400 | 1 |
| Audioscope w/Recharger | WELCH | 23000 | 1 |
| Autoclave Dryer | MIDMARK | M7-001 | 1 |
| Booth Audio Hearing Test | IAC INC | 400A | 1 |
| Cart Crash | UNI-CAR | CAT# AC-53 | 1 |
| Chair Dental Operating | MDT COR | 17-6000-20 | 1 |
| Defibrillator Datascope | BURDICK | MEDIC 5 | 1 |
| Electrocardiograph | BURDICK | E500C | 2 |
| Lamp Power Optic Dental | MIDWEST | 167 | 1 |
| Machine Ultrasonic | CAVITRO | 2001 | 1 |
| Machine X-Ray Dental | GENDEX | GX900 | 1 |
| Microscope | NIKON | ALPHA-PHOT-2 | 1 |
| Polisher Dental | HANDLER | 60B | 1 |
| Processor Film Automatic | AIR TEC | 91000 | 1 |
| Pump Infusion Volumetric | IMED | 927 | 1 |
| Spirometer Portable | PURITAN | PB100 | 1 |
| Sterilizer Auto Clave | PELTON | VAL PLUS 10 | 1 |
| Stretcher AEROMEDAVAC | MED FLI | C396 TYPE I&H | 1 |
| Stretcher Hospital WHLD | COLSON | 6830-6 | 1 |
| System Evacuation Dental | DENTALE | MC-201 | 1 |
| Tank X-Ray Development | BAR-RAY | B-2440 | 1 |

Table XXI-2

# XXII. SAFETY AND ENVIRONMENTAL QUALITY

## 1. OCCUPATIONAL SAFETY

### A. GENERAL

It is the objective of the Naval Undersea Warfare Division Newport, RI to promote and maintain a safe, healthy occupational environment for all personnel, Government and Contractor, permanent and transient, at AUTEC's various facilities.

The Contractor is similarly expected to provide a safe, healthy occupational environment, in compliance with all laws, statutes, and regulations as may apply, in all Contractor-provided facilities utilized in performance of this contract. The cost of any fines levied for non-compliance with such requirements are not reimbursable under this contract (see FAR Part 31, para. 31.205-15).

### B. DESCRIPTION

The AUTEC Safety Program, structured and operated in compliance with U.S. Government regulations and Navy Safety Directives, seeks to increase the efficiency of daily operations through prevention of lost-time accidents, by providing a healthy work environment for the general safety of persons and property. The program promotes safety awareness through publicity and training, and seeks to eliminate potential hazards both by encouraging employees to report (without fear of reprisal) situations/conditions as discovered, and through periodic inspections. Safety is promoted in systems design, test planning and test operations, and in all aspects of base support. The program also encompasses: the use of personal protective equipment; industrial hygiene; mishap investigation and reporting; record keeping; confined space entry safety; hearing and sight conservation; workplace and personnel medical monitoring; hazardous material communications; safety training; electrical lockout/tagout; ergonomics; etc.

Detection and immediate correction of unsafe or unhealthful working conditions or practices, at the lowest possible organizational level is essential to the success of the AUTEC Safety Program. Specific requirements for developing and maintaining a Hazardous Material Control and Management (HMCM) Program are contained in Chapter XXII(2) of this Specification.

## C. CONTRACTOR RESPONSIBILITIES

1. The Contractor shall support AUTEC's Occupational Safety Program in accordance with the AUTEC Schedule of Operations, published Operations Directives, Workload Factors given in paragraph D, and other requirements stated below. Special requirements may be tasked by NUWC Work Order or Letter of Direction.

2. The Contractor shall actively encourage safety awareness and adherence to safe work practices, and shall establish, implement, and adhere to a comprehensive safety program in accordance with the requirements of the Navy Occupational Safety and Health (NAVOSH) Program, OPNAVINST 5100.23 (Series) as discussed herein, and other Applicable Documents cited in paragraph F. The Contractor shall comply with the requirements of references cited in OPNAVINST 5100.23 (Series) for those areas not covered by the instruction itself.

3. The general approach to implementing and maintaining AUTEC’s Occupational Safety Program is that such tasks shall be performed by the Contractor. The Contractor shall arrange for procured support of specific tasks on a case-by-case basis considering cost effectiveness and other requirements as approved by NUWC.

4. The Contractor shall provide a qualified Safety Administrator who shall be responsible for the overall implementation of the AUTEC Safety Program, maintenance of required records, and submission of required reports. This person, assisted by other personnel, shall be qualified to recognize, evaluate, and develop controls to eliminate unsafe/unhealthful work practices and other potential hazards as may be encountered at AUTEC. The Safety Administrator shall additionally be responsible for the review and evaluation of new/changed safety regulations, instructions, procedures/guidelines/standards, etc. issued by higher authority, and for recommending/implementing any programmatic changes necessary to ensure AUTEC's compliance.

5. The Contractor shall provide representation from management on the AUTEC Occupational Safety and Health (OSH) Council, established by NUWC in conformance with OPNAVINST 5100.23 (series) (Chapter 4), and chaired by the AUTEC Detachment Officer in Charge or his designee. The

Contractor shall appoint members in writing. These members shall represent key organizational elements of the activity and shall include environmental, safety, and health personnel. The council shall meet at least quarterly (or as directed by the OIC), and minutes shall be maintained by the Safety Administrator.

6. The Contractor shall implement, and adhere to, a training program for all newly hired personnel designed to stress the importance of safe working practices, and to advise them of applicable safety regulations and procedures. Training in specific work area hazards and other topics shall be provided in accordance with the requirements of 29 CFR Part 1910.1200, OPNAVINST 5100.23 (Series) (Chapter 6), and AUTEC's Hazard Communication (HAZCOM) Plan (see also Chapters XV(3) and XXII(2) of this Specification). This same safety training shall be on-going, for all personnel, to maintain safety awareness and to make personnel cognizant of any changes in materials/procedures. The Contractor shall ensure that on-going first aid and/or CPR training is provided to those personnel who require it due to the nature of their work. The Contractor shall maintain a record of all such training received by each individual.

7. The Contractor shall establish and maintain an AUTEC occupational health program. This program shall seek to prevent occupational illnesses through periodic surveying/monitoring of work spaces for toxic or harmful substances or agents, and appropriate medical monitoring of employees as described in OPNAVINST 5100.23 (Series) (Chapter 8). The Contractor shall identify those employees by occupation and duties that require routine medical monitoring. The Contractor shall use BUMED Technical Manual TM-091-5 as a guide in deciding medical monitoring procedures. The Contractor shall maintain records of all industrial hygiene surveys and the results of monitoring actions. Relevant medical records shall be maintained for all affected Contractor employees.

8. The Contractor shall ensure that all operations conform to a comprehensive program that provides maximum protection against personal injuries or damage to equipment. All non-routine tasks shall be evaluated by cognizant personnel to ensure the highest possible level of safety is obtained through proper engineering or administrative controls and use of personal protective equipment. Additionally:

a. The Contractor shall encourage the reporting, by employees and others, of unhealthful, unsafe, or potentially hazardous conditions or practices in the workplace. The Contractor shall ensure that employees need not fear reprisal for reporting such conditions. The Contractor shall respond to such reports, and keep records in accordance with the requirements of OPNAVINST 5100.23 (Series) (Chapter 10). The Contractor shall ensure that immediate action to correct or abate any confirmed deficiencies is the responsibility of first line managers/supervisors.

b. The Contractor shall develop, and follow, a schedule to perform routine safety and health inspections of all of AUTEC's facilities. These inspections shall be scheduled and conducted on an annual basis (more frequently for high hazard areas), results documented, reinspections performed, and records kept as required by OPNAVINST 5100.23 (Series) (Chapter 9). Similarly, the Contractor shall assist NUWC during any safety inspections, surveys, audits, etc. required/conducted by outside authority. When requested by NUWC, the Contractor shall prepare minutes of meetings, prepare follow-up reports, and track and report compliance issues. Any deficiencies noted that cannot be immediately corrected shall be documented by using the AUTEC Occupational Safety and Health (OSH) Deficiency Notice (Form DC-878). The Contractor shall ensure that all safety deficiencies are corrected within 30 days of the date of notice. If the Contractor is unable to correct any deficiencies within the 30-day period he must have interim measures in place within that period, and shall report the status of any outstanding deficiencies to NUWC on a weekly basis. The AUTEC Deficiency Abatement Program shall comply with procedures contained in OPNAVINST 5100.23 (Series) (Chapter 12).

9. The Contractor shall report, and subsequently investigate, all mishaps, as classified by OPNAVINST 5100.23 (Series) (Chapter 14) (see also Chapter XXIII of this Specification). The Contractor shall maintain detailed records of all such investigations and shall prepare and submit a DoN Incident/Complaint Report (OPNAV Form 5527/1) to NUWC for each event, per DODINST 6055.7 (Series) or OPNAVINST 5102.1 (Series) as appropriate. The Contractor shall analyze the causative factors cited for such

mishaps to determine what measures may be implemented to preclude future occurrences.

10. The Contractor shall provide respiratory protection for persons who must work in areas, or under conditions, where the air is, or may be, contaminated, or may become contaminated without warning, or is otherwise unhealthful/unsafe to breathe, in consonance with OPNAVINST 5100.23 (Series) (Chapter 15) and the requirements of APP 11-20G. Respirators shall be of a type approved and certified by NIOSH as providing protection from given hazard factors. All respirators shall be initially and periodically inspected, fit tested, and cleaned. The Contractor shall maintain records of all such actions. Prior to initial use, the general health status of each individual who requires respiratory protection shall be assessed and documented. Individuals shall receive initial (and annual refresher) training in the nature of the hazard(s) to be encountered, respirator selection, care, and donning procedures, use and limitations, etc. The Contractor shall maintain a record of all such training received by each individual.

11. The Contractor shall, in consonance with The Final Governing Standards for Andros Island (see Chapter XXII of this Specification and OPNAVINST 5100.23 (Series) (Chapter 17), follow requirements set forth in OCD-(22.1)-02-XX for an operations and maintenance/program for asbestos-containing building materials. This program shall include procedures applicable to building cleaning, maintenance, renovation, and general operations (including warning/notification to personnel of potential hazards/medical monitoring, etc.) It is AUTEC policy that the M&O Contractor shall not attempt large-scale (greater than 3 ft. square) asbestos abatement projects due to the specialized nature of such work. All asbestos shall be disposed of in accordance with the requirements of The Final Governing Standards for Andros Island. The Contractor shall arrange for procured services to support any large-scale asbestos abatement projects as may be requested/approved by NUWC. Asbestos removal and disposal will be included in such procured services. The Contractor shall maintain up-to-date AUTEC's Asbestos Inventory.

12. The Contractor shall, in consonance with OPNAVINST 5100.23 (Series) (Chapter 18), follow requirements set forth in APP 11-16G for the protection of persons exposed to operations which involve known or potentially hazardous noise levels.

13. The Contractor shall provide eye protection for persons who must perform tasks which involve, or who must visit areas which expose them to, eye hazardous operations, in accordance with the requirements of OPNAVINST 5100.23 (Series) (Chapter 19). Eye protection devices shall be of a type appropriate to provide protection from given hazard factors, and shall meet guidelines specified by ANSI Z87.1-1989. The Contractor shall maintain a record of all areas, processes, and occupations requiring eye protection. The Contractor shall also maintain all of

AUTEC's emergency eyewash facilities in good working order. Each unit shall be activated weekly for a minimum of 3 minutes and thoroughly cleaned once every three months. The Contractor shall maintain records of all such maintenance.

14. The Contractor shall, in consonance with OPNAVINST 5100.23 (Series) (Chapter 20), follow requirements set forth in APP 11-14G to provide personal protective equipment for persons exposed to workplace hazards which cannot be eliminated through engineering controls.

15. The Contractor shall monitor levels of airborne lead, for any non-construction operations, which might expose individuals to potential lead hazards, and shall initiate biological monitoring and medical surveillance of, and provide respirators and other protection for those employees whose exposure exceeds action levels, as required by OPNAVINST 5100.23 (Series) (Chapter 21). It is AUTEC policy that the M&O Contractors shall not attempt large scale hazardous paint abatement projects due to the specialized nature of such work. For any operations relating to surface preparation and painting, and for any procurement of paint or paint-related products, the Contractor shall adhere to the requirements of APP 11-15G, and shall arrange for procured services to support any large-scale hazardous paint (e.g. containing lead, chronium, or cadmium) abatement projects as may be requested/approved by NUWC.

16. The Contractor shall actively seek to prevent injuries and illnesses by identifying, evaluating and, to the degree possible, controlling ergonomic hazards in the workplace in consonance with guidelines contained in OPNAVINST 5100.23 (Series) (Chapter 23). Injury analysis shall include assessment of possible ergonomic hazards; implementation of corrective measures shall be made as warranted; and training in preventative measures provided as may be appropriate.

17. The Contractor shall, in consonance with OPNAVINST 5100.23 (Series) (Chapter 24), follow lockout/tagout requirements set forth in APP 11-10G to ensure that any machine, equipment, or system is deenergized prior to, and during, servicing or maintenance. The Contractor shall provide training, for affected individuals, to ensure they understand applicable hazards, and the means of necessary energy isolation/control. Other employees shall be instructed on the procedure and the prohibition relating to any attempt to restart/reenergize machines, equipments, or systems

which have been lockedout/taggedout. The Contractor shall maintain a record of all such training received by each individual.

18. The Contractor shall be responsible for managing and implementing AUTEC's confined space entry program in consonance with OPNAVINST 5100.23 (Series) (Chapter 27) and requirements set forth in APP 11-18G.

a. To implement and provide for the confined space inspection and certification requirements for working on/ entering closed (non-maritime) spaces, etc., the Contractor shall provide or arrange for the services of a qualified person(s), as described/defined by 29 CFR Parts 1910/1926.

b. To implement and provide for the confined space inspection and certification requirements for working on/entering closed (maritime) spaces, the Contractor shall comply with the requirements of NAVSEA S6470-AA-SAF 10, and shall provide or arrange for the services of a National Fire Prevention Association (NFPA) - certified Marine Chemist and/or a competent person(s), as appropriate for the task as described/defined by 29 CFR Part 1915.

c. The Contractor shall maintain an up-to-date record documenting the training and experience of any individuals assigned duties as 'qualified' or 'competent' persons, and certifying that they meet the standards/guidelines/requirements defined by 29 CFR (applicable part(s)). This record shall be made available to NUWC upon request.

19. The Contractor shall, in consonance with OPNAVINST 5100.23 (Series) (Chapter 28), follow requirements set forth in APP 11-12G to protect all NUWCDETAUTEC personnel, Government and Contractor, from exposure to bloodborne pathogens. All potentially affected personnel shall receive initial and annual refresher training in the pathology, recognition, exposure prevention/protection, and post-exposure procedures to be followed as pertains to bloodborne pathogens. The Contractor shall maintain a record of all such training received by each individual.

20. The Contractor shall be responsible for managing indoor air quality at AUTEC's various facilities on Andros Island, as required by OPNAVINST 5100.23 (Series) (Chapter 30). The Contractor shall investigate reports of any buildings suspected of

having poor indoor air quality, and develop recommended solutions. The Contractor shall adhere to Navy policy, as set forth in APP 8-37G, which prohibits smoking in all AUTEC vehicles, work buildings, and common areas of multiple housing units.

21. The Contractor shall conduct a thorough safety review of all construction/repair projects to identify any potential hazards to personnel or the environment, prior to beginning work. As a minimum, this review shall address each of the following:

a. Asbestos, lead, and other hazardous material exposure.

b. Electrical hazard.

c. Respirator and other Personal Protective Equipment (PPE) requirements.

d. Fire protection and prevention methods.

e. Environmental protection.

f. Fall hazard and prevention methods.

g. NFPA Codes.

h. Hazardous waste disposal.

22. The Contractor shall ensure that all test planning and test operations conduct adhere to the guidance and direction provided in NUWCDIVNPTINST 5100.6 (series).

23. The Contractor shall provide expert guidance in the safe handling and storage of gases under pressure (low and high), ordnance, POL products, flammable materials, and other hazardous items as may be requested by NUWC.

24. The Contractor shall, subject to approval by the AUTEC Detachment Officer-in-Charge, designate an individual to perform duties as AUTEC's Explosive Safety Officer who shall be responsible for managing and implementing AUTEC's Explosive Safety program in consonance with OP5 paragraphs 1-4.3 and 1-4.3.1. The Contractor shall establish and maintain an Explosives Review Committee. This committee will meet at least quarterly to identify problem areas and recommend solutions, review range

operations test plans requiring explosives, and provide expert guidance on ordnance storage and use. Minutes of all meetings shall be presented to NUWC.

25. The Contractor is encouraged to develop and implement an AUTEC Safety Incentive Award Program similar to that discussed in NUWCDIVNPTINST 5100.5 (Series), subject to NUWC approval, that will foster a base-wide safety culture.

26. The Contractor shall submit all NUWC-required technical and administrative reports, described in Chapter XXV of this Specification, as pertain to support of AUTEC's occupational safety program.

## D. WORKLOAD FACTORS

1. As derived from information presented in paragraph C.

2. All Andros Island and West Palm Beach workplaces shall be inspected a minimum of once per year.

3. All high-hazard work areas (e.g.: welding shop(s); Public Works; downrange sites; torpedo flushing facilities; marine department; shipboard operations; etc.) shall be inspected a minimum of once every six months.

4. Construction/public works projects shall be inspected weekly by a qualified safety inspector.

## E. KEY PERSONNEL/PERSONNEL QUALIFICATIONS

1. Key Personnel: None.

2. Personnel Qualifications:

a. **Safety Administrator** To successfully execute the tasks and responsibilities described, the person assigned should as a minimum:

1. Have a Bachelors Degree in Occupational Safety and Health, Environmental Health, or in a related field, and/or be certified by the Board of Certified Safety Professionals.

2. Have 10 years experience with increasing responsibility in the field of industrial hygiene and occupational safety and health.

3. Have three years supervisory experience.

4. Have excellent working knowledge of OSHA and Navy safety requirements, standards, policies, and reporting systems.

5. Have good oral and written communications skills.

## F. APPLICABLE DOCUMENTS

| | |
|---|---|
| 29 Code of Federal Regulations(CFR); | Occupational Safety and Health Administration (OSHA) Regulations (applicable parts) |
| FAR Part 31, Para. 31.205-15; | Fines, penalties, and mischarging costs. |
| Final Governing Standards for Andros Island; | Prepared by Commander in Chief, U.S. Atlantic Fleet (CINCLANTFLT) |
| DODINST 6055.7(Series); | Mishap Investigation, Reporting and Record Keeping |
| OPNAVINST 5100.23 (Series); | Navy Occupational Safety and Health (NAVOSH) Program |
| OPNAVINST 5102.1 (Series); | Mishap Investigation and Reporting |
| JAGINST 5800.7C Chapter XII; | Admiralty Claims |
| OPNAVINST 8023.2 (Series); | U.S. Navy Explosives Safety Policies, Requirements and Procedures (Department of the Navy Explosives Safety Policy Manual) |
| BUMED Technical Manual TM 91-5; | Medical Surveillance Procedures Manual and Medical Matrix |

JA1-566a
N61339-97-C-0001
P00001

| | |
|---|---|
| NAVSEA OP-5; | Ammunition and Explosives Ashore Safety Regulations for Handling, Storing, Production, Renovation, and Shipping |

| | |
|---|---|
| NAVSEA S 6470-AA-SAF-10; | Technical Manual Naval Sea Systems Command - Gas Free Engineering Program |
| NUWCDIVNPTINST 5100.5 (Series); | NUWC Division Newport Safety Manual |
| NUWCDIVNPTINST 5100.6 (Series); | AUTEC Range Safety Manual |
| OCD-(22.1)-02-XX; | Asbestos-Containing Building Material (ACBM) Operation and Maintenance Program |

- - - - - *deleted* - - - - -

| | |
|---|---|
| OCD-(22.1)-20-XX; | Marine Cutting and Welding Procedures |
| Other OCDs; | Relevant/Related OCDs as may be listed in Table XV-4 |
| APP 2-109G; | Air Evacuations: Medical Emergencies and Deaths |
| APP 8-24G; | Admiralty Incident Reporting |
| APP 8-35G; | Base Support Planning and Estimating Request |
| APP 8-36G; | Self-Help Projects |
| APP 8-37G; | Smoking Policy |
| APP 11-3G; | Fire Protection Policy |
| APP 11-5G; | Hurricane Plan, Andros Ranges |

| | |
|---|---|
| APP 11-7G; | AUTEC Occupational Safety and Health Statement |
| APP 11-9G; | Surface Preparation and Painting |
| APP 11-10G; | Lockout/Tagout Program |
| APP 11-12G; | Policy for AUTEC Bloodborne Pathogens (BBP) Program |
| APP 11-14G; | Personal Protective Equipment and Matrix |
| APP 11-15G; | AUTEC Toxic Paint Program |
| APP 11-16G; | Hearing Conservation |
| APP 11-17G; | Chemical Laboratory Hygiene |
| APP 11-18G; | Confined and Enclosed Space Safety |
| APP 11-20G; | Occupational Respiratory Protection Program |

AUTEC Hazard Communication (HAZCOM) Plan

| | |
|---|---|
| American National Standards Institute (ANSI) (Z88.2); | Practices for Respirator Protection |
| (ANSI) (Z87.1-1989); | Eye and Face Protection |
| American Conference of Governmental Industrial Hygienists, Inc., Committee on Industrial Ventilation; | A Manual of Recommended Practices |

National Fire Protection Association (NFPA) Code

# XXII. SAFETY AND ENVIRONMENTAL QUALITY

## 2. ENVIRONMENTAL QUALITY PROTECTION

### A. GENERAL

AUTEC's mission requires daily operations in land, sea, and air environments. AUTEC is committed to operating ships, aircraft, and shore facilities in a manner compatible with the preservation of the environment. National defense and environmental protection are, and must be, compatible goals. Therefore, it is inherent to AUTEC's mission to prevent pollution, protect the environment, and conserve the natural resources of both the United States and our host country. All personnel assigned must be fully committed to the successful execution of AUTEC's Environmental Quality Protection Program.

The Contractor is similarly expected to comply with all laws, statutes, and regulations as may apply for protection of the environment at all Contractor-provided facilities utilized in performance of this contract. Except as specifically allowed by the FAR, the cost of any fines levied for non-compliance with such requirements are not reimbursable under this contract (see FAR Part 31, para. 31.205-15).

### B. DESCRIPTION

The AUTEC Environmental Quality Protection Program is structured and operated in compliance with applicable Presidential (Executive) orders, U.S. Government and State of Florida laws and regulations, and Navy Environmental Protection Instructions and Directives, and seeks to conserve natural resources, and to prevent any environmental pollution while simultaneously maximizing operational readiness. The program encompasses Air Pollution Prevention, Water Pollution Prevention, Potable (Ground) Water System Protection, Oil and Hazardous Substance Spill Contingency Planning, Oil Pollution Prevention, Pesticide Pollution Prevention, Noise Pollution Prevention, Pollution Prevention Ashore and Afloat, Hazardous Materials Control and Management, Recycling (e.g. Resource Recovery), Hazardous/Non-Hazardous and Solid Waste Management, etc.

OPNAVINST 5090.1 (Series) provides overall Navy policy and requirements for protection of the environment and natural resources, citing applicable laws, statutes, and regulations which vary by location and scope of activity. In summary:

- AUTEC's West Palm Beach, FL headquarters facility has been designated a "Conditionally Exempt Small Quantity Generator" by

the State of Florida, Department of Environmental Protection. U.S. Government and State of Florida laws and regulations apply.

- AUTEC's operations in the territorial seas of the United States, and within the United States, its territories, commonwealths, and possessions are subject to all U.S. and local Government laws and regulations.
- AUTEC's operations within the Exclusive Economic Zone of the Commonwealth of the Bahamas are subject to the requirements of The Final Governing Standards for Andros Island promulgated by CINCLANTFLT, and by Executive Orders 12088 and 12114 as directed by OPNAVINST 5090.1 (Series).
- AUTEC's operations outside of the territorial seas of the United States or other countries (i.e. in the global commons) are subject to the requirements of Executive Order 12114.

AUTEC's Range Management Plan (RMP) documents environmental (impact) mitigation and monitoring procedures to be followed for the protection of marine mammals during current and known future test range operations. An Environmental Review (ER) of the RMP was conducted, and the plan approved, by the Chief of Naval Operations (CNO).

Separately, the Environmental Program Office, NUWCDIVNPT Code 551, is assigned responsibility for all NUWC EPCRA reporting including that for AUTEC Detachment, West Palm Beach, FL.

## C. CONTRACTOR RESPONSIBILITIES

1. The Contractor shall support AUTEC's Environmental Quality Protection Program in accordance with the AUTEC Schedule of Operations, published Operations Directives, the Workload Factors given in paragraph D, and other requirements stated below. Special requirements may be tasked by NUWC Work Order or Letter of Direction.

2. The Contractor shall develop and implement a comprehensive program in consonance with the requirements of OPNAVINST 5090.1 (Series) that ensures that all operations performed under this contract provide maximum required protection against environmental pollution. As appropriate to the location and scope of activity, this program shall comply with the provisions of The Final Governing Standards for Andros Island, AUTEC's approved Range Management Plan, and other Applicable Documents as listed in paragraph F. Because of the dynamic nature of environmental protection laws and regulations, the Contractor is required and expected to remain fully cognizant of any pending or enacted/promulgated requirements changes and to develop/recommend means whereby AUTEC may remain compliant.

3. The general approach to implementing and maintaining AUTEC's Environmental Quality Protection Program is that such tasks shall be performed by the Contractor. The Contractor shall arrange for procured support of specific tasks on a case-by-case basis considering cost effectiveness and other requirements as approved by NUWC.

4. The Contractor shall, in conjunction with NUWC, annually review The Final Governing Standards for Andros Island. The Standards shall be reviewed for applicability, deficiencies in protection, inconsistencies, conflicts with DoD policies, etc. A written report of this review shall be prepared, including any recommended changes, requested waivers, etc., for forwarding to CINCLANTFLT by 1 October of each year. The Contractor shall annotate this review action in Table 1, Record of Reviews, of The Final Governing Standards for Andros Island.

5. In supporting the AUTEC mission the Contractor shall ensure compliance with the requirements set forth in OPNAVINST

5090.1 (series) to first assess the environmental impact of any new activities including shore-based facilities projects (see also Chapter XX(4) of this Specification) (i.e. proposed actions as defined):

a. For any new activities outside of the U.S., its territories, possessions, and territorial seas, the Contractor shall further ensure compliance with the requirements of Executive Orders 12088 and 12114. Requirements of The Final Governing Standards for Andros Island shall also be addressed for new activities within the Exclusive Economic Zone of the Bahamas. Accordingly, the Contractor shall first provide a preliminary analysis of the potential environmental impact of any "New Activities" as defined. This analysis shall make recommendations, based upon included factual information, as to whether such "New Activity" requires subsequent preparation of a Categorical Exclusion, an Environmental Study, an Environmental Review, or a Negative Decision. Preparation of such documents shall normally be the responsibility of the Contractor. The Contractor shall arrange for the services of a qualified environmental subcontractor to prepare such documents on a case-by-case basis considering cost effectiveness, complexity, and other requirements as approved by NUWC.

b. For any new activities inside of the U.S., its territories, possessions, and territorial seas, the Contractor shall further ensure compliance with the requirements of the National Environmental Policy Act (NEPA). This shall include preparation of Environmental Assessments (EAs), Environmental Impact Statements (EISs), Categorical Exclusions (CATEXs), or recommended Findings Of No Significant Impact (FONSIs) as appropriate. The methodology employed shall be similar to that required for "New Activities" in the Bahamas.

6. The Contractor shall be responsible for determining, documenting, and monitoring AUTEC's waste streams. The Contractor shall manage AUTEC's Hazardous Waste/Waste Oil Program and inform NUWC as to any recommended program changes. The Contractor shall provide required services to both AUTEC and to authorized Range Users, for the handling, storage, and subsequent disposal of hazardous wastes and oil. AUTEC is not an EPA permitted Treatment, Storage and Disposal Facility (TSDF). AUTEC does however, provide various accumulation and storage facilities on Andros Island, including a Hazardous Waste

Central Storage Facility (HWCSF) (equivalent to an EPA “90 Day Storage Facility"), approximately 15 satellite accumulation areas, and a “Less Than 90 Day Storage Facility” for the accumulation of OTTO Fuel Waste. Various satellite accumulation areas and a central storage area are also provided at AUTEC's Headquarters facility in West Palm Beach, FL. The Contractor shall operate these facilities in accordance with the AUTEC Hazardous Waste Management Plan. Such services shall be provided up to, and including, the loading of such waste for shipment to DRMO. The Contractor shall, as appropriate, similarly control and manage the return of unused or excess Hazardous Material to DRMO for reuse. As applicable, these services include (but are not limited to):

a. Provision of regulatory-compliant containers, labels, and packaging materials.

b. Pickup of excess hazardous material or hazardous waste upon request and subsequent packaging for shipment, treatment and/or disposal. Depending upon the EPA classification of the waste, neutralization, consolidation, recycling, or other disposition may be required. Hazardous waste shall be reclaimed or recycled, (e.g., converted to nonhazardous waste) whenever economically feasible.

c. Preparation of DD-Form 1348 Turn-in Documents for submittal to the Defense Reutilization and Marketing Office (DRMO), Patrick AFB, Florida for all excess hazardous material or hazardous waste. Services shall be provided in accordance with the requirements of the AUTEC Hazardous Waste Management Plan, AUTEC Procedures for Control and Management of Hazardous Waste - United Kingdom Projects, and DoDD 4160.21M.

d. Manifesting of hazardous material and waste to comply with 49 CFR Parts 106-108, 40 CFR Part 262, 40 CFR Part 761, and applicable Florida State Law(s). Maintaining a central file for: all Hazardous Waste Manifests, for at least three years; and for any Certificates of Disposal for PCB items for at least five years.

e. Identification and tracking of all hazardous waste generated at AUTEC. Performing routine sampling and having such samples analyzed by a Florida State Certified Environmental Laboratory. Identifying waste streams by either generator knowledge or by formal laboratory analysis. Maintaining copies of analysis, and waste characteristics in a central file. All hazardous waste requiring disposal through DRMO will require; 1) Waste Profile Sheet, 2) Material Safety Data Sheet, 3) Copies of Available Analysis, and 4) DD-Form 1348 Turn-in Document.

f. Collecting used nonhazardous engine oil and processing this oil as a diesel fuel supplement. AUTEC provides oil collection tanks and oil filtering and fuels blending equipment. Waste oil (nonhazardous) that cannot be blended and used at AUTEC shall be collected and shipped to CONUS for disposal through DRMO. Waste oil shipped to CONUS must meet specific standards as outlined in Section 17-710 of the State of Florida Environmental Protection Regulations.

g. Ensuring that personnel assigned hazardous waste management duties meet the training requirements identified in 40 CFR Part 262, 29 CFR Parts 1910.120 and 1910.1200, and the AUTEC Hazardous Waste Management Plan, as applicable to the specific job function. The Contractor shall maintain a record of such training received by each individual.

h. Performing routine inspections of all hazardous waste accumulation and storage facilities, and documenting the results in accordance with the requirements of the AUTEC Hazardous Waste Management Plan. Immediate corrective action shall be initiated and documented, as appropriate.

i. The Contractor shall keep accurate records of the type, amount, and date of disposal of all Hazardous Wastes. The Contractor shall keep similar records for all returned unused or excess Hazardous Material. Such records shall be retained for a period of at least five years.

7. The Contractor shall: implement and adhere to a pest control program for AUTEC's facilities on Andros Island; provide a DoD-certified pest controller(s); store, handle, and dispose of all related hazardous materials and waste; keep records; and prepare/submit all related reports, in accordance with the requirements of The Final Governing Standards for Andros Island, OPNAVINST 6250.4 (series), and the AUTEC Pest Management Plan.

8. The Contractor shall develop and maintain a Hazardous Material Control and Management (HMCM) Program as described by OPNAVINST 4110.2 (series). The Contractor shall provide total life cycle control, or "cradle to grave" tracking, of all hazardous material obtained for use at AUTEC.

9. The Contractor shall develop and maintain an AUTEC Hazardous Waste Minimization Program, as described in AUTEC’s Pollution Prevention (P2) Plan, to constrain the amount of hazardous waste requiring disposal. This program shall include the development, maintenance, and adherence to a Project Hazardous Material Authorized Use List (AUL) designed to

minimize the amount of such material brought to AUTEC (see also Chapter XXI(1) of this Specification). The Contractor shall not procure any Hazardous Material (products, substances, etc.) which do not specifically appear on AUTEC's AUL. The Contractor shall review, update, and distribute AUTEC's AUL on a monthly basis. The Contractor shall assure that all Hazardous Materials received/brought to AUTEC have an affixed manufacturer's warning label and accompanying Material Safety Data Sheet. The

Contractor shall assure that any locally repackaged Hazardous Material is marked with either the manufacturer's original warning label or a completed Hazardous Chemical Warning Label (DD Form 2522). The Contractor shall also develop, implement, and adhere to a Hazardous Material Utilization Program that includes a central issue, and inventory control point for all hazardous materials brought to AUTEC. This program shall encourage the complete and efficient use of such materials, prior to the expiration of their indicated shelf life, in order to minimize the generation of hazardous waste. All waste minimization efforts must be documented in accordance with requirements contained in 40 CFR Part 262.41.

As required by the Emergency Planning and Community Right to Know Act (EPCRA), the Contractor shall maintain accurate inventory records of all Extremely Hazardous Substances (EHSs), as defined by 40 CFR Part 355 Appendix A and Appendix B. The Contractor shall provide NUWC a report, by 1 March of each year, listing each EHS authorized for use at AUTEC's Headquarters facility in West Palm Beach, FL, the corresponding Threshold Planning Quantity for each such EHS, and the maximum amount of each such EHS on hand at any one time during the previous calendar year. A copy of this report shall also be provided to NUWCDIVNPT Code 551. Such inventory records shall be retained for at least five years.

10. All employees who prepare hazardous material or waste for shipment must be trained in accordance to the requirements of 49 CFR Part 173.1. Additionally, all personnel who handle hazardous material in the transport system shall be trained in accordance with the requirements of 49 CFR Parts 106-108. The Contractor shall maintain a record of such training received by each individual. Personnel who have not been so trained shall not be permitted to conduct operations without supervision.

11. The Contractor shall identify and implement changes in operational procedures, construction practices, and equipment procurements as required to preclude or minimize the possible discharge of harmful or hazardous pollutants into the environment.

12. The Contractor shall maintain an inventory of all equipment and chemicals that contain Class I, II, or III Ozone Depleting

Substances (ODSs). The use of ODSs shall be managed in accordance with the requirements of The Final Governing Standards for Andros Island and OPNAVINST 5090.1 (Series). A program shall be established, and adhered to, to eliminate the use of these and any other ODS materials in accordance with applicable laws, statutes, regulations, and Navy policy. All personnel assigned to work on air conditioning, refrigeration, or other equipment or systems containing ODSs must be certified in accordance with the requirements of 40 CFR Part

82.161. The Contractor shall maintain a record of such certification received by each individual. Personnel who have not been so certified shall not be permitted to conduct operations without supervision. The Contractor shall maintain written records as to the types and quantities of ODS containing materials procured as well as written records of the types and quantities of any ozone depleting substances released into the atmosphere. The Contractor shall recover, recycle, and reuse ODS material to the maximum extent possible. See also Chapter XX (1) and XX (2) of this Specification.

13. The Contractor shall implement and maintain a Qualified Recycling Program (QRP), in accordance with The Final Governing Standards for Andros Island, OPNAVINST 5090.1 (Series), and NAVFAC MO-213. To the degree economically feasible, and as approved by NUWC, items such as cardboard, glass, POL waste, aluminum cans, scrap metal, lumber, and paper, etc., shall be collected and returned for recycling. The Contractor shall coordinate all QRP actions with the Defense Reutilization and Marketing Office (DRMO), Patrick AFB, Florida, to ensure compliance with DoD 4160.21 (series). Detailed records of any monies collected as a result of such recycling, as well as records as to the types and amounts of materials returned for recycling, must be maintained for 7 years. Any monies recouped, as the result of such sales, shall be returned to the Government and reported in the monthly Cost Control Report (see Chapters XXI(1) and XXV of this Specification). Additionally, as required by DoN Memorandum, Affirmative Procurement Program, dated 5 Sept 1996, the Contractor shall establish a program in compliance with 40 CFR Parts 247-253, to maximize the procurement of materials such as paper, vehicle tires, building materials, oils, cardboard, etc., manufactured from recovered materials (see also Chapter XXI(1) of this Specification). Detailed records of such efforts must be maintained for reporting in the Solid Waste Annual Report.

14. The Contractor shall provide a Certified Environmental Protection Program Administrator, to coordinate the AUTEC Environmental Quality Protection Program, and to be responsible for the preparation of all required reports, maintenance of all required records, etc. This person, assisted by other personnel, shall be qualified to ensure AUTEC's compliance with current and evolving U.S. Government/Navy (and if applicable, Bahamian)

environmental protection regulations and directives. This person shall also be responsible for immediately notifying NUWC of any specific term(s) or requirement(s) of this contract, or pending modification(s) to this contract, or direction received from NUWC or the Contracting Officer which would put the Contractor at risk of a fine or other penalty for failure to comply with any law, statute, or regulation dealing with protection of the environment. This person shall also be responsible for assuring that all of AUTEC's Environmental Quality Protection Program documents and plans are reviewed in accordance with the schedules stated in this chapter, and/or Table XV-5, and for notifying NUWC of the results of such reviews, as well as for periodically updating AUTEC's AUL, and various other listings within AUTEC documents listed in the Applicable Documents cited in paragraph F.

15. The Contractor shall comply with the provisions and requirements of AUTEC's Installation Spill Contingency Plan (ISCP). The Contractor shall ensure that adequate engineering controls are in place, and that operating personnel who use, or who are exposed to, hazardous materials are properly trained (per 29 CFR 1910.1200(h)) (see also Chapters XV(3) and XXII(1) of this Specification) in order to minimize the possibility of any release of oil or other hazardous substances into the environment. The Contractor shall provide spill emergency response services and personnel to mitigate the impact of any oil or hazardous substance spills or releases. Assigned emergency response personnel must be trained in accordance with the requirements of 29 CFR 1910.120. The Contractor shall maintain a record of all such training received by each individual. Periodic training shall include response training drills using existing equipment. Appropriate drills will be scheduled to exercise each special contingency area cited in the ISCP at least annually (or more often if deemed necessary to insure proficiency). An ISCP Drill Report, including lessons learned, shall be provided to NUWC within 10 working days of each such drill. The Contractor shall maintain and distribute up-to-date organizational listings and rosters of assigned emergency response personnel. The Contractor shall maintain all of AUTEC's emergency spill response materials and equipment, listed in the ISCP, so as to assure its availability and readiness to respond to any oil or hazardous substance spill ashore or afloat. The Contractor shall be responsible for advising NUWC as to the adequacy of available materials and equipment, and for submitting any recommended changes to the types/quantities/location stockpiled. The inventories shall be maintained up-to-date.

16. The Contractor shall comply with the provisions of the AUTEC Pollution Prevention (P2) Plan which seeks to minimize the possibility of polluting the environment through: proactive reduction of the types and amounts of hazardous materials utilized; and the central control and inventory management of hazardous materials authorized for use. The Contractor shall, on an on-going basis as required by the plan, review and analyze these processes which produce waste products and to determine the viability and economic feasibility of process improvements which could reduce such wastes. The Contractor shall, as appropriate, assist AUTEC in establishing and tracking P2 progress goals, and annually updating the contents of AUTEC's P2 Plan.

17. The Contractor shall maintain a program to collect, store, and dispose of infectious and non-infectious medical waste as well as expired pharmaceuticals. As applicable, disposal of such material

shall comply with the requirements of DoDD 4160.21M, The Final Governing Standards for Andros Island, and Section 17-712 of the State of Florida Environmental Protection Regulations. See also Chapter XXI (5) of this Specification.

18. The Contractor shall manage historic, cultural, and natural resources at AUTEC giving consideration to the requirements of The Final Governing Standards for Andros Island and the AUTEC Comprehensive Eco-System and Cultural Resources Management Plan. The Contractor shall not remove any trees or large shrubs without prior NUWC approval.

19. The Contractor shall assist NUWC during any environmental inspections, surveys, audits or field work that maybe required/conducted by outside authority. When requested by NUWC, the Contractor shall prepare minutes of meetings, prepare follow-up reports, track and report compliance issues. The Contractor shall ensure that any environmental protection program deficiencies are corrected in a timely manner (e.g. within 90 days unless otherwise agreed to by NUWC), and shall report the status of outstanding deficiencies to NUWC on a monthly basis. Additionally, the Contractor shall collect data, maintain records and prepare and submit AUTEC's: Annual Potable Water (System) Sanitary Survey Report (see also Chapter XX(2) of this Specification); Solid Waste Annual Report, Hazardous Waste Annual and Biennial Reports, Annual Oil Spill Equipment Allowance and Requirement Review Report, Environmental Compliance Action Reports, Oil and Hazardous Substance Spill Reports, Environmental Budget Reports, and other related reports or data calls that may be required by NUWC or the Applicable Documents listed in

Paragraph F. The Contractor shall maintain copies of all such reports for a minimum of five years. The Contractor shall respond promptly to any special requests for data/reports.

20. The Contractor shall implement a Hazard Communication (HAZCOM) Program in accordance with the Applicable Documents cited in paragraph F (see also Chapters XV(3) and XXII(1) of this Specification). Integral to this plan shall be the preparation and maintenance of a central file of Hazardous Material Data Sheets (MSDSs) for all hazardous products/substances appearing on AUTEC's Authorized Use List (AUL). In addition, copies of applicable MSDSs shall be conspicuously displayed in each workplace.

21. The Contractor shall, in consonance with the CNO-approved Environmental Review of AUTEC’s Range Management Plan, follow requirements set forth in OCD-(22.2)-04-XX for environmental impact mitigation, monitoring, training, and related record keeping for all applicable range operations. See also Chapter IV(1) of this Specification.

22. Additional specific requirements relating to AUTEC's Environmental Quality Protection Program are addressed elsewhere in this Specificiation as follows:

| Topic | Specification Chapter(s) |
|---|---|
| ■ Air Emissions (Vehicles) | XX(3) |
| ■ Asbestos | XX(1), XXII(1) |
| ■ Drinking Water | XX(1), XX(2) |
| ■ Solid Waste | XX(2), XXI(1) |
| ■ POLs | XX(2) |
| ■ Pollution Prevention Afloat | XVIII |

23. The Contractor shall submit all NUWC-required technical and administrative reports, described in Chapter XXV of this Specification, as pertain to support of AUTEC's Environmental Protection program.

## D. WORKLOAD FACTORS

1. As derived from information presented in paragraph C.

2. AUTEC generates approximately 25,000 pounds of hazardous waste per year.

3. AUTEC generates approximately 60,000 gallons of waste oil per year.

4. AUTEC generates approximately 100 pounds of Biohazardous waste per year.

5. AUTEC generates approximately 20 tons of OTTO fuel-contaminated liquid and solid waste per year.

6. AUTEC generates approximately 100 tons of recyclable solid waste per year.

## E. KEY PERSONNEL/PERSONNEL QUALIFICATIONS

1. Key Personnel: None.

2. Personnel Qualifications:

a. **Environmental Administrator** To successfully execute the tasks and responsibilities described, the person assigned should as a minimum:

1. Hold a degree in Environmental Engineering, Environmental Science, Chemistry, or a related field, and/or be a Certified Hazardous Material Manager, certified by the Institute of Hazardous Materials Management or be a Registered Environmental Professional, registered by the National Registry of Environmental Professionals.

2. Have 10 years experience and increasing responsibility in the environmental protection field.

3. Have at least 5 years of direct experience with DoD and Navy Environmental policies, procedures, and requirements.

4. Have knowledge and experience in Oil and Hazardous Substance emergency response and cleanup operations.

## F. APPLICABLE DOCUMENTS

National Environmental Policy Act (NEPA)

| | |
|---|---|
| 29 Code of Federal Regulations (CFRs); | Occupational Safety and Health Administration (OSHA) Regulations (applicable parts) |
| 33 CFR Parts 125-199; | U.S. Coast Guard Regulations for Pollution Prevention afloat |
| 40 CFR; | EPA Standards |

| | |
|---|---|
| Parts 100-149; | Oil Pollution Prevention |
| Parts 150-189; | Pesticides |

| | |
|---|---|
| Parts 190-259; | Radiation, noise, ocean dumping, solid waste, and affirmative procurement |
| Parts 260-299; | Solid waste, Hazardous waste |
| Parts 300-399; | Emergency Planning and Community Right-to-know Act (EPCRA) |
| Parts 700-End; | Toxic Substances Control Act (TSCA) |
| 49 CFR Parts 100-177; | Department of Transportation (DOT) regulations for transport of Hazardous material and waste |
| Executive Order 12088; | Federal Compliance with Pollution Control Standards |
| Executive Order 12114; | Environmental Effects Abroad of Major Federal Actions |
| HM-181; | DOT Hazardous Material Transport Regulations |
| FAR Part 31, Para. 31.205-15; | Fines, penalties, and mischarged costs. |
| Final Governing Standards for Andros Island; | Prepared by Commander in Chief, U.S. Atlantic Fleet (CINCLANTFLT) |
| Final Environmental Review (Adoption of a Range Management Plan for the Atlantic Undersea Test and Evaluation Center (AUTEC), Andros Island, Bahamas) dtd 5 Sept 1997 | Approved by CNO (N456C) 30 Nov 1997 |
| DoN Memorandum, dtd 5 Sept 1996; | Department of the Navy Affirmative Procurement Program for Items Containing Recovered Materials |
| DoD 4160.21M; | Defense Utilization and Marketing Manual (DoD Disposal Manual) |

JA1-579
N61339-97-C-0001
P00049

| | |
|---|---|
| OPNAVINST 4110.2 (series); | Hazardous Materials Control and Management |
| OPNAVINST 5090.1 (series); | Environmental and Natural Resources Protection Manual |
| OPNAVINST 5090.2 (series); | Management of Ozone Depleting Substances |
| OPNAVINST 5100.23 (series); | Navy Occupational Safety and Health Manual (NAVOSH) |
| OPNAVINST 6250.4 (series); | Pest Management Programs |
| NAVFAC MO-213; | Guidance on Solid Waste |
| NAVSEA S6340-AA-MMA-010; | Technical Manual for OTTOFUEL II |
| OCD-(22.2)-03-XX; | Oil Spill Prevention at Sea |
| OCD-(22.2)-04-XX; | Range Operations Environmental Mitigation Procedures |
| Other OCDs; | Relevant/Related OCDs as may be listed in Table XV-4 |
| APP 8-24G; | Admiralty Incident Reporting |
| APP 8-25G; | AUTEC Waterfront Procedures and Regulations |
| APP 8-35G; | Base Support Planning and Estimating Request |
| APP 8-41G; | AUTEC Project Qualified Recycling Program |

| | |
|---|---|
| APP 11-5G; | Hurricane Plan, Andros Ranges |
| APP 11-8G; | Hazardous Materials Control and Management Program |
| APP 11-9G; | Surface Preparation and Painting |
| APP 11-13G; | Hazardous Waste Management Policy |
| APP 11-15G; | AUTEC Toxic Paint Program |
| APP 11-17G; | Chemical Laboratory Hygiene |
| APP 11-18G; | Confined and Enclosed Space Safety |
| APP 11-22G; | Environmental Review |

AUTEC Hazardous Waste Management Plan for NUWCDETAUTEC Sites Andros Island Bahamas (Attachment 1 to APP 11-13G)

AUTEC Procedure for Control and Management of Hazardous Waste - United Kingdom Programs (Appendix E to Attachment 1 to APP 11-13G), and Hazardous Waste Management Plan for West Palm Beach (Appendix F to Attachment 1 to APP 11-13G)

AUTEC Waste Sampling and Analysis Plan

AUTEC Hazard Communication (HAZCOM) Plan

AUTEC SARA Title III and Community Right to Know Plan (CONUS only)

AUTEC Installation Spill Contingency Plan (ISCP)

AUTEC Comprehensive Eco-System and Cultural Resources Management Plan

AUTEC Pollution Prevention (P2) Plan

AUTEC Pest Management Plan

AUTEC Solid Waste Management Plan

AUTEC Hazardous Waste Storage Area Closure Plan

AUTEC Potable Water Master Plan

AUTEC Underground Storage Tank (UST) Management Plan

AUTEC Wastewater Slug Prevention Plan

State of Florida Environmental Protection Regulations;
Sections 62-710 and 62-712

# XXIII. SECURITY

## A. GENERAL

AUTEC supports a wide variety of classified research, test, and training evolutions. AUTEC's principal test conduct and analysis facilities are located in a foreign country (e.g. the Commonwealth of the Bahamas). All personnel, real property, facilities, equipment, and information must be protected against preventable injury, loss, damage, or compromise. It is the function of the AUTEC Security Program to provide such protection, and to guard against covert acts of espionage, sabotage, terrorism, trespass, and theft.

## B. DESCRIPTION

A comprehensive program encompassing physical security, industrial security, communications security, computer security, document control, and Operations Security (OP SEC) is required at all AUTEC facilities, both in West Palm Beach, FL, and on Andros Island.

Uniformed guard force services, including guards in various fixed locations and on roving patrol, are required in order to: control facilities access; deter entry of unauthorized personnel, vehicles, or property to NUWCDETAUTEC Andros Island or West Palm Beach, FL; safeguard personnel as well as Government and private property; enforce both locally issued and governing DoD/Naval directives; and to prevent unauthorized access to classified material. The Contractor's uniformed guard force, although restricted by OPNAVINST 5530.14 (Series) from performing law enforcement (or other police) duties, are empowered to temporarily detain individuals suspected of committing felony, misdemeanor, or breach of peace offenses within the bounds of AUTEC property (see Chapter I of this Specification) pending the notification and arrival of the proper authorities. Uniformed guard force members shall neither carry, be issued, nor possess firearms on AUTEC property. Armed security is the responsibility of AUTEC's Officer-in-Charge.

Police and law enforcement functions at AUTEC are the responsibility of the Navy Security Force headed by the assigned U.S. Navy Security Officer, the Naval Criminal Investigative Service, the Defense Investigative Service, and/or local (i.e. West Palm Beach, FL, or Fresh Creek, Andros Island, Bahamas) or U.S. Federal authorities, depending upon the situation at hand.

Only personnel, whether AUTEC employees or visitors, with appropriate security clearance and a “need-to-know” shall be allowed access to classified information or equipment.

All classified documents, whether prepared internally or received from outside sources must be protected against loss and disclosure. Accurate receipts and accountability records must be maintained, and materials must be properly secured when not actively in use. Materials prepared for delivery/transmittal must be properly marked and packaged, and appropriate records kept. Materials no longer required will be returned to the originator or disposed of by shredding or burning.

The nature of work performed at AUTEC requires strict adherence to the provisions of DoD 5220.22-M. The large quantity of classified test data generated, and the large number of computers, terminals, and related data processing equipment throughout AUTEC requires a strict Automated Information Systems (AIS) Security program in compliance with SECNAVINST 5239.2 (Series) and OPNAVINST 5239.1 (Series). AUTEC's Navy communications center handles a variety of classified messages, both incoming and outgoing, and must be operated in accordance with requirements cited herein as well as in Chapter VII (1) of this Specification.

In addition to the traditional security programs described, AUTEC, under the DoD OPSEC program, is committed to protecting all test program or operation-specific information, whether classified or unclassified, that would be advantageous to any potential adversary. OPSEC encompasses all steps which may be taken to deny intelligence information, and serves to strengthen the effectiveness of traditional programs by identifying weaknesses and vulnerabilities.

It is the responsibility of the security program to implement and support all of the aforementioned functions.

## C. CONTRACTOR RESPONSIBILITIES

1. The Contractor shall be responsible for implementing, operating, and manning AUTEC's physical, industrial, and operations security programs in accordance with the AUTEC Schedule of Operations, published Operations Directives, Workload Factors given in paragraph D, Applicable Documents cited in paragraph F, and other requirements stated below. Special requirements may be tasked by NUWC Work Order or Letter of Direction.

2. The Contractor shall provide a uniformed guard force for the physical security of AUTEC's West Palm Beach, FL, Headquarters and Site 1 on Andros Island. All AUTEC sites are controlled areas, with access limited to authorized personnel only, as described in APP 4-11G. Physical security at AUTEC's downrange sites (2, 3, and 4) on Andros Island may be accomplished by properly trained site personnel. The Contractor shall provide personnel qualified to perform the duties cited in Chapter 4, Paragraph 0401 "Functions of the Security Force", of OPNAVINST 5530.14 (Series). General requirements are as follows:

a. Physical Qualifications. Uniformed guard force personnel must be in good physical condition and emotionally qualified to withstand the stress and physical exertion inherent to the pursuit, apprehension, overpowering, and restraint of suspects and violators. Personnel must be able to protect both themselves and others.

b. Suitability. Uniformed guard force personnel shall have no felony convictions and no convictions that would negatively reflect upon the individual's reliability.

c. Security Clearances. All members of the Contractor's uniformed guard force shall have a security clearance of Secret, with the exception of those persons assigned to either the Main Gate or Dispatch positions at AUTEC's Site 1 on Andros Island.

d. Training. All uniformed guard force personnel, and downrange site personnel responsible for physical security, must be trained in accordance with the requirements stipulated in Chapter 9 and Appendices VIII (Phase I-Basic Training) and IX (Phase II-In Service Training) of OPNAVINST 5530.14 (Series) for Contract Guards. All uniformed guard force members shall receive training in the Subjects and Subject Elements noted in these two Appendices as being Mandatory. Members assigned to motor vehicle control duties as described in paragraphs C.9. and C.10., below, shall receive additional training in the subjects of Traffic Laws and Enforcement and Patrol Procedures. Downrange site personnel responsible for physical security as an ancillary function need only receive training in such Subjects and Subject Elements as relate to circumstances as may reasonably be expected for them to encounter. The Contractor is responsible for developing a Security Force Training Plan reflecting these requirements, as well as for developing specific course materials to be taught and for establishing the specific number of hours of instruction for each Subject Element. The Contractor shall provide a copy of the Training Plan and actual course material, for each Phase of training, to the AUTEC Detachment Officer-in-Charge for approval. Personnel shall complete Phase I training within 30 days of employment and prior to being assigned to perform Guard Force or downrange site physical security duties without supervision. Phase II training shall be completed annually. The Contractor shall maintain a record of all such training received by each individual as long as they are so employed.

e. Use of Deadly Force. Although members of the Contractor's uniformed guard force are to neither be issued, nor allowed to carry or possess (on AUTEC property) firearms of any kind, each is required to be aware of AUTEC's policy concerning the use of Deadly Force as contained in NUWCDETAUTECINST 5530.2 (Series).

Each person assigned physical security duties shall read and understand this policy and shall sign a statement confirming such understanding. The Contractor shall retain such documents on file for as long as each individual remains so employed.

f. Uniforms. Members of the Contractor's uniformed guard force shall wear identical clean, neat, distinctive uniforms, and name tags, similar to those accepted/worn in the profession, but without corporate identity.

g. Authority. Within the NUWCDETACHMENT AUTEC property boundaries, members of the Contractor's uniformed guard force, and those persons responsible for physical security at AUTEC's downrange sites on Andros Island, have the authority under this Contract, on behalf of the AUTEC Detachment Officer-in-Charge, to enforce all governing DoD/Naval directives promulgated by higher authority as well as all local directives, rules, and regulations issued under the authority of the Officer-in-Charge. The proper method of enforcement will depend upon the circumstances of each situation, but may include reporting of violations, and/or temporary detention of intruders, military, or civilian (Government or other) personnel pending notification and arrival of the appropriate law enforcement authorities. In all cases,
the authority for enforcement must be exercised using sound judgment. Immediate coordination, through the Contractor's Guard Force shift supervisor, with AUTEC's assigned U.S. Navy Security Officer or the Officer-in-Charge shall be made if detention authority is exercised.

h. Detainment of Persons.

1. The Contractor's physical security personnel may detain civilian or foreign military personnel who reasonably, and in good faith, are believed to be guilty of a felony or infraction (where a felony or infraction has, in fact, been committed), or who committed a felony or infraction in their presence. Physical security personnel may similarly detain persons committing a misdemeanor in their presence if such persons are also involved in a breach of the peace.

2. The Contractor's physical security personnel may detain individuals who are subject to the Uniform Code of Military Justice (i.e. U.S. Military personnel) when there is reasonable belief that an offense (i.e. felony, misdemeanor, or violation of regulations) has been committed and that the person to be apprehended committed it.

3. The Contractor's physical security personnel may also, in exercising their responsibility to safeguard personnel as well as Government and private property, detain any persons (military or civilian) who reasonably, and in good faith, are believed to be responsible for willful damage, pilferage, removal, secreting, misappropriation, larceny, theft, acts of espionage, sabotage, wrongful destruction, threats, or other crimes against such property or persons.

4. Personnel being detained may be physically restrained only if, in the judgment of the Contractor's physical security personnel, it is decided that they pose a potential danger to themselves or to others.

5. The Contractor's physical security personnel shall detain persons only for so long as is necessary to effect the transfer of custody of such persons to the appropriate military, DoD, Navy, or civil or U.S. Federal law enforcement authorities having jurisdiction over the matter. Any such transfer shall be coordinated through AUTEC's assigned U.S. Navy Security Officer or the Officer-in-Charge. DETENTION OF ANY PERSON REQUIRES THAT AN INCIDENT REPORT BE COMPLETED (SEE PARAGRAPH C.11 OF THIS CHAPTER).

6. The Contractor shall, in all cases, be relieved of any liability for injuries sustained by any individual being so detained or restrained.

i. Search and Seizure. The Contractor's physical security personnel will exercise search and seizure authority as prescribed in OPNAVINST 5580.1 (Series) as well as:

1. For recovery of property (including vehicle searches) as described in APP 9-5G.

2. During aircraft boarding as described in APP 4-18G.

3. For drug-specific matters as described in APP 4-19G.

4. When administrative vehicle and personnel inspections are ordered by the Officer-in-Charge under circumstances deemed necessary to prevent introduction of contraband, dangerous weapons, and other prohibited items and to protect the premises, material, and property from loss, damage, or destruction. Private vehicle interiors shall be visually inspected, and operators shall be requested to open glove compartments, trunk lids, and any other enclosed spaces. Operator permission is not required if the vehicle belongs to the Government.

Passengers and pedestrians shall be requested to open any packages, bags, briefcases, etc. for inspection. Individuals refusing to permit such inspection will be denied entry. Operators of private vehicles refusing to permit such inspection shall have their on-base driving privileges suspended for such length of time deemed appropriate by the Officer-in-Charge. If already on AUTEC property, private vehicles shall not be allowed to proceed if the operator refuses to permit inspection of the vehicle. If already on AUTEC property, any packages, bags, briefcases, etc. shall be confiscated if an individual refuses to permit inspection. The Contractor shall issue a receipt for any private property received or confiscated from an individual. The Contractor shall be responsible for the safekeeping of such property pending disposition or return to the owner. Recovered Government property, other stolen items, contraband, dangerous weapons, etc. shall be treated as evidence.

5. When vehicle and personnel inspections are ordered by the Officer-in-Charge to counter possible terrorist activity, as prescribed by the Threat Conditions described in NUWCDETAUTECINST 5530.2 (Series).

- - - - - - - - *d e l e t e d* - - - -

3. The Contractor shall provide a Security Dispatcher at Site 1 on Andros Island to receive emergency calls, monitor security alarms, and to dispatch/coordinate follow-up response via telephone, radio, or beeper. The Security Dispatcher shall maintain a record (Desk Journal) of all calls made/received, events, and actions taken as occur during each shift. The Contractor shall retain such records for a minimum of three years. The Contractor shall make such records available to AUTEC's Officer-in-Charge, or his appointed representative(s), upon request. See also Chapter XXIV of this Specification.

4. The Contractor shall provide pass and identification services to control access to AUTEC's facilities and sites. The Contractor shall provide such services at both AUTEC's West Palm Beach, FL, Headquarters and at Site 1 on Andros Island. The Contractor shall control and issue tamper-proof photo-identification (e.g. I.D.) badges to all AUTEC personnel identifying their affiliation, access to privileges (e.g. retail store, meals, etc.), access to controlled areas, and a code for degree of level of security clearance (recording of security clearances on I.D. badges is prohibited) as described in APP 4-11G. Such badges will be provided for AUTEC Government, Contractor, and subcontractor personnel, and their dependents if resident on Andros Island, and for others as may be requested/authorized by NUWC. The Contractor shall similarly control and issue tamper-proof temporary I.D. badges for visitors, as may be requested/authorized by NUWC. Such temporary badges will not require a photograph but will be marked to indicate whether or not an escort is required.

5. The Contractor shall provide for the registration of pets at AUTEC's various Andros Island sites as described in APP 4-15G.

6. The Contractor shall be responsible for ascertaining that all visitors to AUTEC's facilities are properly cleared, or escorted, prior to being allowed entry. Security personnel at both locations shall be provided the Contractor's aircraft manifest for each flight to/from Andros Island in order to track arriving/departing personnel.

7. The Contractor shall implement and adhere to a key and lock control program, as described in APP 4-13G, to ensure that only authorized personnel have access to secured/locked areas, whether they contain classified material or not.

8. The Contractor shall control and issue DoN motor vehicle identification decals for privately-owned motor vehicles belonging to AUTEC personnel in accordance with OPNAVINST 5560.10

(Series), OPNAVINST 11200.5 (Series), and APP 7-10G. The Contractor shall maintain appropriate records of the issuance of such decals to ensure that owners can be identified, as well as to comply with renewal requirements. The Contractor shall ensure that all vehicles granted DoN motor vehicle identification decals for use of Government owned Parking Facilities at AUTEC's West Palm Beach Headquarters meet Palm Beach County Motor Vehicle Emission requirements. The Contractor shall control vehicular access to AUTEC's Andros Island sites. The Contractor shall control, and issue, temporary base-access permits for other vehicles as approved by NUWC, in accordance with the aforementioned documents. All private vehicles on Andros Island must meet Bahamian insurance and registration requirements, and the owner/operator must possess a valid driver's license. No unauthorized vehicles shall be allowed access to AUTEC's Andros Island sites.

9. The Contractor shall operate and control AUTEC's motor vehicle traffic program, and enforce rules and regulations pertaining to motor vehicle operations, as described in OPNAVINST 5100.12 (Series) and APP 7-10G. Citations shall be issued to violators of established rules and regulations and "points" will be assessed appropriate to the nature of each violation. The Contractor shall maintain records of all such violations/citations/points, and shall suspend the on-base driving privileges of personnel accumulating 12 or more points within any calendar year.

10. The Contractor shall investigate all vehicular accidents occurring within the perimeters of all of AUTEC's Andros Island sites and all accidents involving U.S. Government Motor Vehicles operated by Contractor/Subcontractor personnel. The Contractor shall complete and submit a DoN Traffic Accident Report (OPNAV Form 5527/1A) to NUWC, and assure that operators complete an Operator's Motor Vehicle Accident (Standard Form 91) as prescribed by NAVFAC P-300.

11. The Contractor shall investigate all reported mishaps/incidents involving accident/injury/death, complaints or suspicion of criminal activity, suspected compromise or loss of classified material, other violations of established security regulations, fire, theft, material or property damage, and for any other similar significant event where action by a member of the security force is required or requested. The Contractor shall maintain detailed records of all such investigations and prepare and

submit a DoN Incident/Complaint Report (OPNAV Form 5527/1) to NUWC for each event, per DoDINST 6055.7 (Series), OPNAVINST 5102.1 (Series), or OPNAVINST 5580.1 (Series) as appropriate.

12. The Contractor shall provide for the enforcement of such rules and regulations as are established by the Government for the maintenance of good order within the bounds of AUTEC's facilities on Andros Island, and shall cooperate fully with the appropriate authorities of the Commonwealth of the Bahamas, in those areas wherein they have criminal jurisdiction, as defined in the U.S./Bahamian Agreement (see Section J, Attachment (2) of this document). The Contractor shall similarly cooperate fully with any other law enforcement authorities who have jurisdiction over matters occurring at NUWC DETACHMENT AUTEC.

13. The Contractor shall conduct security screening of passengers, baggage, and cargo prior to loading aboard any transport aircraft flight provided by the Contractor, or by any Subcontractor, under this Contract (see Chapter XIX of this Specification). Passengers and their hand-carried items will be checked by a guard, or other qualified person, using a metal detector, prior to boarding the aircraft. Passengers shall not be allowed access to their luggage or contact with unauthorized personnel once such inspection has been completed. All inspections and searches shall be in accordance with APP 4-18G. Random searches of tagged baggage and cargo shall also be conducted.

14. The Contractor shall ensure that all employees requiring access to classified areas, equipment, material, documents, or information are processed for a National Agency Check (NAC) through the Defense Security Service (DSS). Table XXIII-1 provides general information as to those functional/operational areas, under this contract, where personnel will require such clearances. Actual requirements are determined by the nature of the work performed. Even though a DSS clearance may allow access to material at the SECRET level, individuals will still only be granted clearances/access to such level as is required for performance of assigned tasks. Regardless of the

level of security clearance granted, personnel shall only be allowed access to classified material on a "need-to-know" basis. In keeping with the personal reliability requirements and standards for such clearances, the Contractor shall screen employment applicants to ensure a high degree of stability and personal integrity.

15. U.S. Security Clearances cannot be granted to foreign nationals. However, the Contractor shall obtain a Security Assurance Statement from the local Bahamian District Commissioner for any indigenous personnel prior to their employment at AUTEC. Foreign nationals shall not be employed in the following areas:

a. Security.
b. Command Control Building.
c. Range Support Shop Compound.
d. Marine vessels that support technical operations.

16. The Contractor shall be responsible for debriefing employees who have had access to classified information when such access is no longer allowed, or required under this contract, as prescribed by DoD 5220.22-M.

17. The Contractor shall ensure that all personnel provided access to COMSEC material, equipment, or information have a final security clearance commensurate with the level of classification involved. Access to any COMSEC material, equipment, or information shall be on a strict need-to-know basis. As required by OPNAVINST 2221.5 (Series), all individuals provided access to COMSEC material must be briefed regarding the unique nature of COMSEC material and their security responsibilities to safeguard and control it. The designated AUTEC Navy COMSEC Account Officer will schedule and provide such briefings and will notify the Contractor's Industrial Security Manager, in writing, of such briefings. The AUTEC Navy COMSEC Account Officer will maintain a record of such briefings received by each individual. Access to AUTEC's Andros Island message center shall be limited to personnel assigned to work there except as may otherwise be required by this Specification or authorized by NUWC. COMSEC material will only be destroyed as directed by NUWC.

18. The Contractor shall control, operate, and be responsible for a Classification Management System, in accordance with the provisions of DoD 5220.22-M. Classification Management shall include both the application of proper classification markings to identified materials and the assignment of derivative classification markings to other materials.

19. The Contractor shall support and comply with the Automated Information Systems (AIS) security requirements contained in: DoD 5220.22-M; SECNAVINST 5239.2 (Series); and OPNAVINST 5239.1 (Series).

20. The Contractor shall control, operate, and be responsible for a classified document and material control program. The Contractor shall provide for the receipt, control, and subsequent distribution of classified documents, manuals, and other materials both at AUTEC's West Palm Beach, FL, Headquarters, and at AUTEC's Andros Island sites. Such documents/materials received either at AUTEC's West Palm Beach Headquarters or at Site 1 on

Andros Island shall be inspected for completeness and any evidence of tampering. The Contractor shall maintain records of all such documents and material received, and to whom they were custodied. The Contractor shall ensure the proper security marking of all documents and material produced under this Contract, following the guidelines provided in the appropriate Applicable Documents. The Contractor shall likewise maintain records of all such classified documents/materials produced, and to whom they are custodied or transmitted. The Contractor shall annually inventory all classified documents/material. Documents/material which are no longer required shall be returned to the originator or destroyed by shredding or burning as appropriate, in accordance with procedures established by DoD 5220.22-M. Records of such return, destruction, or transmittal shall be maintained for a minimum of two years.

21. The Contractor shall assure that all classified documents and material are stored in approved containers or storage areas when not in use, as required by DoD 5220.22-M. The Contractor shall provide for periodic inspection of all work areas to assure that classified documents/material are properly safeguarded/stored. Such inspection shall also be accomplished subsequent to normal working hours.

22. The Contractor shall provide for delivery of classified documents and material between and within AUTEC's facilities. Classified documents and material shipped between AUTEC's West Palm Beach, FL, Headquarters and Site 1 on Andros Island shall be custodied to authorized couriers and appropriate documentation prepared in order to provide traceability and accountability. The Contractor shall be responsible for clearing such documents/material through U.S. or Bahamian customs, as appropriate. Delivery of such documents/material within each facility shall be accomplished by properly cleared employees.

23. The Contractor shall provide for the transmittal of classified documents and material to Range Users, other U.S. Navy commands and activities, and to other Government or appropriate facilities. Such documents/material will be properly marked and packed as prescribed by DoD 5220.22-M and shall be accompanied by receipt documents. The Contractor shall maintain copies of such receipts for two years.

24. The Contractor shall ensure that all newly hired employees receive adequate training concerning the safeguarding of classified

information and material. Such training shall include all facets of the Navy's OPSEC program as relate to AUTEC, physical and industrial security requirements, applicable laws, rules, and regulations and associated punitive measures, as relate to disclosure of classified information/material, awareness of intelligence methods used by foreign entities and actions to be taken by the employee under such circumstances. The Contractor shall similarly provide such training for all employees on an on-going, periodic basis. See also Chapter XV(3) of this Specification.

25. The Contractor shall provide OPSEC support in accordance with the approved AUTEC OPSEC Plan, and shall provide support for future OPSEC initiatives as requested by NUWC.

26. The Contractor shall collect data, maintain records, and prepare/submit reports as may be required by the Applicable Documents cited in paragraph F. The Contractor shall assist NUWC in the conduct of any security inspections, surveys, audits, etc. required/conducted by outside authority. The Contractor shall respond promptly to any special requests for data/reports.

27. The Contractor shall provide a Senior Industrial Security Specialist who shall act to ensure compliance with all DoD and USN security requirements applicable under this contract, including specific classification guidelines, Tempest, and OPSEC requirements contained in the current DoD Contract Security Classification Specification (DD Form 254) as appearing in Section J, Attachment (8), of this Contract.

28. The Contractor shall submit all NUWC-required technical and administrative reports, described in Chapter XXV of this Specification, as pertain to support of AUTEC's security program.

## D. WORKLOAD FACTORS

1. The following security posts shall be manned 24 hours per day, 365 days per year. Minimum manning shall be as indicated.

a. AUTEC West Palm Beach, Fl, Headquarters:

1. Front Desk (2-working hours) (1-other times)

b. AUTEC, Andros Island Site 1:

1. Main Gate (1)

2. Front Desk, Command Control Building (1)

3. Entrance Gate, Range Support Shop Compound (1)

4. Dispatcher (1)

2. The Roving Patrol within AUTEC's West Palm Beach Headquarters required during non-working hours shall be sufficient to patrol the facility on a periodic basis.

3. Roving patrols at AUTEC, Andros Island Site 1 shall be provided 24 hours per day, 365 days per year. Such patrols shall be sufficient to:

a. Enforce traffic regulations.

b. Transport and badge Range Users arriving after normal working hours.

c. Transport occasional data packages if an assigned courier is not available.

d. Periodic inspection of work areas during normal work hours.

e. Inspect security containers and storage areas at least once every shift during non-work hours.

f. Patrol the perimeters of the site and all secured buildings and facilities at random intervals, at least once every four hours, during non-work hours.

g. Inspect security posts at least once every two hours.

h. Respond promptly to the scene of any reported infraction, felony, mishap, or incident in progress or other situation of an emergent nature, with backup response if warranted by the circumstances at hand.

4. Typically, two (2) persons are required at the Site 1 Main Gate to execute vehicular/personnel inspection procedures when such are required:

a. When so ordered or directed by the Officer-in-Charge to conduct Administrative (vehicular/personnel) Inspections, and if no member of AUTEC's military security organization is available to assist the Contractor, routine roving patrol duties may temporarily be suspended. Response to emergent situations, when occurring, shall take priority.

b. If Inspection of Vehicles/Personnel is deemed warranted by AUTEC's Officer-in-Charge due to heightened Threat Conditions, members of AUTEC's military security organization will be made available to assist the Contractor.

5. Investigation of accidents/incidents and preparation of required reports is an as-occurring workload.

6. Minimum manning as cited in Sections 1 through 4 above are predicated on unavailability of U.S. military personnel to staff posts/patrols. If U.S. military personnel are available to supplement or replace contractor guards, they will be utilized as directed by the Officer-In-Charge. During the period U.S. military personnel are used to staff specific posts/patrols, the Contractor shall be relieved of the responsibility for manning those posts/patrols. It is understood that the availability of military personnel will vary in both their quantity and tour of duty. Accordingly, the contractor will be allowed a reasonable timeframe, not to exceed 60 days, to make adjustments to its guard force manning levels.

6. Workload relative to inspection of aircraft passengers, baggage, etc. may be derived from information contained in Chapter XIX(1) of this Specification.

7. Courier service for classified documents/material being transferred between West Palm Beach and Andros Island is required daily.

8. Security requirements for the pier area at Site 1 on Andros Island are as described in Chapter XVIII of this Specification.

## E. KEY PERSONNEL/PERSONNEL QUALIFICATIONS

1. Key Personnel: None.

2. Personnel Qualifications:

a. Senior Industrial Security Specialist To successfully execute the tasks and responsibilities described, the person assigned should as a minimum:

1. Have 10 years experience and increasing responsibility in the field of industrial security as pertains to Government requirements for contractor operations.

2. Be thoroughly familiar with all aspects of Industrial Security as described in DoD 5220.22-M.

## F. APPLICABLE DOCUMENTS

U.S./Bahamian Agreement (Section J, Attachment (2) of this document)

| | |
|---|---|
| DoDD (C) 5200.5; | Communications Security (COMSEC) (U) |
| DoDD 5220.6 (Series); | Defense Industrial Personnel Security Clearance Review Program |

| | |
|---|---|
| DoD 5220.22-M; | National Industrial Security Program Operating Manual (NISPOM) for Safeguarding Classified Information |
| DoD 5220.22-S; | COMSEC Supplement to National Industrial Security Manual for Safeguarding Classified Information |
| DoDINST 6055.7 (Series); | Mishap Investigations, Reporting and Record Keeping |
| SECNAVINST 3070.1 (Series); | Operations Security |
| SECNAVINST 5239.2 (Series); | Department of the Navy Automated Information System (AIS) Security Program |
| SECNAVINST 5510.34 (Series); | Manual for the Disclosure of the Department of the Navy Military Information to Foreign Governments and International Organizations |
| OPNAVINST 2221.5 (Series); | Release of Communications Security (COMSEC) Material to U.S. Industrial Firms Under Contract to the U.S. Navy |
| OPNAVINST 3070.1 (Series); | Operations Security |
| OPNAVINST 5100.12 (Series); | Navy Traffic Safety Program |
| OPNAVINST 5102.1 (Series); | Mishap Investigation and Reporting |
| OPNAVINST 5239.1 (Series); | Department of the Navy Automatic Data Processing Systems Security Program |
| OPNAVINST 5510.1 (Series); | Department of the Navy Information and Personnel Security Program Regulation |
| OPNAVINST C5510.101 (Series); | Department of the Navy Security Manual for NATO, SEATO and CENTO Classified Information (U) |
| OPNAVINST 5513.1 (Series); | Department of the Navy Security Classification Guidelines |

| | |
|---|---|
| OPNAVINST C5513.2 (Series); | DoN Security Classification Guidance for Air Warfare Programs (U) |
| OPNAVINST S5513.3 (Series); | DoN Security Classification Guidance for Surface Warfare Programs (U) |
| OPNAVINST S5513.5 (Series); | DoN Security Classification Guidance for Undersea Warfare Programs (U) |
| OPNAVINST S5513.6 (Series); | DoN Security Classification Guidance for Communication and Satellite Programs (U) |
| OPNAVINST S5513.7 (Series); | DoN Security Classification Guidance for Mine Warfare Programs (U) |
| OPNAVINST S5513.8 (Series); | DoN Security Classification Guidance for Electronic Warfare Programs (U) |
| OPNAVINST R5513.10 (Series); | DoN Security Classification Guidance for Advanced Technology and Miscellaneous Programs |
| OPNAVINST 5530.14 (Series); | DoN Physical Security and Loss Prevention |
| OPNAVINST 5560.10 (Series); | Standard Procedures for Registration and Marking of Non-Government-Owned Motor Vehicles |
| OPNAVINST 5580.1 (Series); | Navy Law Enforcement Manual |
| OPNAVINST 11200.5 (Series); | Motor Vehicle Traffic Supervision |
| NAVFAC Publication P-300; | Management of Transportation Equipment |
| NUWCDETAUTECINST 2280.1 (Series); | Internal Distribution and Control Procedures for Communications Security Material System (CMS) Material |
| NUWCDETAUTECINST 5511.1 (Series); | Emergency Action Plan for Communications Security Material (CMS) |

| | |
|---|---|
| Other OCDs; | Relevant/Related OCDs as may be listed in Table XV-4 |
| APP 2-109G; | Air Evacuations: Medical Emergencies and Deaths |
| APP 4-11G; | Access Control: AUTEC Project Personnel and Visitors or Personal Guests at NUWCDETAUTEC Facilities |
| APP 4-13G; | Key and Lock Control Program |
| APP 4-15G; | Control of Feral Animals and Domesticated Dogs and Cats - AUTEC Base |
| APP 4-18G; | Security and Boarding Procedures for Aircraft Passengers and Baggage |
| APP 4-19G; | Utilization of Drug Detecting Canines |
| APP 4-21G; | Mass Casualty Plan |
| APP 7-10G; | Motor Vehicle Traffic Program |
| APP 7-11G; | Use and Control of GSA and Navy-Owned Vehicles - AUTEC Project |
| APP 7-15G; | Shipment of Personal Property |
| APP 7-16G; | ARA Auto/Boat/Trailer Staging Areas |
| APP 8-14G; | Fixed Wing Passenger/Cargo Transportation |
| APP 8-24G; | Admiralty Incident Reporting |
| APP 8-25G; | AUTEC Waterfront Procedures and Regulations |

| | |
|---|---|
| APP 8-44G; | Lost, Abandoned or Unclaimed Privately Owned Personal Property |
| APP 9-5G; | Inspections and Searches for Recovery of Property |
| APP 11-3G; | Fire Protection Policy |
| APP 11-4G; | Hurricane Plan, CONUS, AUTEC |
| APP 11-5G; | Hurricane Plan, Andros Ranges |
| APP 11-12G; | Policy for AUTEC Project Bloodbourne Pathogens (BPP) Program |

Naval Undersea Warfare Center Division Newport OPSEC Plan - Atlantic Undersea Test and Evaluation Center (AUTEC)*

AUTEC's Installation Spill Contingency Plan

| | |
|---|---|
| DD Form 254; | DoD Contract Security Classification Specification (See Section J, Attachment (9)) |

* Appendix I to Enclosure (1) of NUWCDIVNPTINST 3070.1 (Series); Operations Security

JA1-595
N61339-97-C-0001
P00040

# GENERAL GUIDE TO AUTEC FUNCTIONAL/OPERATIONAL SECURITY LEVELS

| Functional/Operational Area | Nominal Level of Security | Remarks |
|---|---|---|
| Test Planning and Scheduling | Secret | |
| Command Control Building | Confidential (Minimum) | Classified Facility |
| ■ Weapons Range Testing | Secret | |
| ■ Acoustic Testing | Secret | |
| ■ FORACS V Range/ Sensor Accuracy Testing | Secret | Equipment Unclassified |
| ■ Operations Control Center | Secret | |
| ■ Data Processing | Secret | |
| ■ Communications | Secret | |
| ■ Timing | Confidential (Minimum) | |
| ■ Message Center | Secret | - - - -*deleted* - - - - |
| AIS Support | Confidential (Minimum) | Some Require Secret Clearance |
| Range Support Shop/Torpedo Facility | Confidential (Minimum) | Classified Facilities |
| ■ MK 30 Target | Secret | |

Table XXIII-1

**GENERAL GUIDE**
**TO**
**AUTEC FUNCTIONAL/OPERATIONAL SECURITY LEVELS**

| Functional/Operational Area | Nominal Level of Security | Remarks |
|---|---|---|
| ■ Weapons Preparation/Post Run Support | Confidential | |
| ■ Test Equipment and Calibration/Standards Laboratory | Confidential | |

Table XXIII-1 (Cont.)

**GENERAL GUIDE**
**TO**
**AUTEC FUNCTIONAL/OPERATIONAL SECURITY LEVELS**

| Functional/Operational Area | Nominal Level of Security | Remarks |
|---|---|---|
| Weapon and Target Handling | Confidential | |
| Weapon/Target Launcher Systems | Confidential | Some require Secret clearance |
| Test Electronics and Instrumentation Support | Confidential | |
| Technical Services | Unclassified | Some require clearance |
| Support Services | Unclassified | Some require clearance |
| Systems Engineering and Analysis | Confidential | Some require Secret clearance |
| Marine Support Services | Unclassified | Most require Confidential with some Secret |
| Air Operations | Unclassified | Some require clearance |

Table XXIII-1 (Cont.)

**GENERAL GUIDE**
**TO**
**AUTEC FUNCTIONAL/OPERATIONAL SECURITY LEVELS**

| Functional/Operational Area | Nominal Level of Security | Remarks |
|---|---|---|
| Public Works | Unclassified | Some require clearance |
| Logistics | Unclassified | |
| Safety/Environmental Quality | Unclassified | Some require clearance* |
| Security | Secret | Except for uniformed guards at the Site 1 Main Gate and Dispatch Office |
| Fire Protection | Unclassified** | Some require clearance*** |
| Reports | Unclassified | |
| Dependent Education | Unclassified | |
| Welfare and Recreation | Unclassified | |

Notes:

* Clearance based upon level of unescorted access required.

** Firefighting personnel do not require security clearance. If, for emergency response purposes, firefighting personnel do have to gain access to a classified space, they must be subsequently debriefed as per DoD 5220.22-M.

*** Fire prevention personnel who routinely inspect classified spaces may do so unescorted if they have an appropriate security clearance. Otherwise, they must have an appropriately cleared escort at all times.

Table XXIII-1 (Cont.)

# XXIV. FIRE PROTECTION

## A. GENERAL

Due to the remote nature of AUTEC's Andros Island facilities, the first objective of AUTEC's fire protection program is prevention through continued awareness training and adherence to safe practices. The second objective, in the event of a fire or other emergency situation, is to limit any loss of property or injury to personnel through rapid response by trained and capable personnel.

## B. DESCRIPTION

The fire protection program at Site 1 on Andros Island encompasses all aspects of prevention and firefighting (e.g. fire suppression) as would normally be expected at a U.S. Naval shore activity with an aviation component. A fire training area is provided at Site 1, and the fire station at Site 1 is provided with an alarm room, radios for emergency communications, and major equipment items listed in Table XXIV-1. This list is considered to be representative. Actual inventory is as provided by NUWC. AUTEC's down range sites (2,3, and 4) on Andros Island are equipped with various portable fire extinguishers.

No firefighting support is available from the local community, requiring that AUTEC's firefighting capability be self-sufficient, and at times responsive to fire emergencies outside the base perimeter.

The fire department is also depended upon to provide the first response to emergency/life threatening situations such as hazardous material spills, vehicular or aircraft crashes, personnel injuries and other medical emergencies, etc., and to provide standby support during potentially hazardous evolutions such as aircraft/vessel refueling and ordnance-handling.

## C. CONTRACTOR RESPONSIBILITIES

1. The Contractor shall maintain, check-out, calibrate, man, and operate all of AUTEC's fire protection equipment in accordance with the Workload Factors given in paragraph D, standards and procedures established by the OCDs and other Applicable Documents cited in paragraph F or, if not otherwise specified, as delineated in maintenance and operation manuals provided by equipment manufacturers, and other

requirements stated below. Special requirements may be tasked by NUWC Work Order or Letter of Direction.

2. The Contractor shall maintain all of AUTEC's fire protection (e.g. portable, mobile, and installed fire suppression; fire alarm; crash/rescue; ambulance; emergency medical; emergency response; personnel safety; emergency dispatch communications; etc.) and prevention equipment in an operational and ready-for-use status. Assigned personnel shall be capable of performing routine equipment maintenance, readiness tests, and minor corrective maintenance. As required by The Final Governing Standards for Andros Island, the Contractor shall assure that no atmospheric releases of Chlorofluorocarbons or Halons are permitted during fire fighter training or fire suppression systems leakage testing.

3. The general approach to corrective maintenance of fire protection equipment shall be to restore all mission-essential equipment to operational status as quickly as possible by replacement of components and subassemblies. The components may then be repaired by either the Contractor or the manufacturer or others, whichever NUWC deems to be most cost effective.

4. The Contractor shall arrange for manufacturer or other subcontractor support of fire protection equipment on a case-by-case basis considering cost effectiveness and related requirements as approved by NUWC.

5. The Contractor shall develop and maintain an inventory of Government provided consumables, and repair/spare parts for AUTEC's fire protection equipment in accordance with the policies provided in Chapter XXI(1) of this Specification.

6. The Contractor shall provide support to Purchasing for procurement of fire prevention, fire suppression, and emergency response equipment including: specification writing; technical evaluation of proposals; cost review; technical qualification of sources; preparation of inspection and acceptance procedures; and conduct of acceptance test.

7. The Contractor shall provide trained personnel, physically qualified as described and required by NAVFACINST 11320.22 (Series) to perform all fire protection/fire suppression tasks and functions. All firefighters must be graduates of a state-approved firefighting course, or have at least one year of full-time, direct firefighting experience in the specific job category assigned. Drivers of emergency response vehicles must have successfully

completed an emergency vehicle operator course as required by OPNAVINST 5100.12 (Series) and possess either a valid U.S. state or Bahamian drivers license. Emergency medical service personnel must be certified Emergency Medical Technicians (EMTs) and must be recertified every two years.

8. The Contractor shall implement, and adhere to, a training and certification program for all newly hired fire protection personnel to familiarize them with AUTEC's specific equipment, base lay-out, structures, and facilities. Training shall consist of classroom instruction, and practical drills. Training shall be on-going in order to ensure personnel efficiency. The Contractor shall prepare and adhere to an annual training plan and physical fitness exercise program for fire fighters and fire inspectors as required by NAVFACINST 11320.22 (Series) and NAVAIR 00-80R-14. The Contractor shall encourage career development through a program of on-the-job training, rotation of assignments (as personnel are qualified), and individual study based upon International Fire Service Training Association (IFSTA) manuals. The Contractor shall maintain a record of all such training received by each individual. Within three months after being assigned to duty, the Contractor must certify to NUWC that the individual has completed training and been certified in the following areas:

a. General orientation/base layout/facilities familiarization.

b. AUTEC Fire Department organization, standing orders, and overall responsibilities.

c. Specific duties in the event of fire, hazardous material spill, crashes, etc.

d. Characteristics and classifications of fires.

e. Operation of fire extinguishers, structural fire pumper and crash/rescue vehicle (or such vehicle(s) as may subsequently be provided by NUWC), and personnel protective equipment including self-contained breathing apparatus.

f. Fire alarm response and emergency procedures.

g. Alarm response to AUTEC's heliport.

h. First aid (including cardio-pulmonary resuscitation)

i. Standards of conduct and dress.

9. The Contractor shall prepare and maintain site-specific fire protection, and fire suppression contingency plans for all of

AUTEC's major buildings and facilities. Such plans, together with the site-specific hazardous materials spill contingency plans required by Chapter XXII(2) of this Specification, shall be always available both at the Site 1 fire station and on each fire/emergency response vehicle.

The Contractor shall develop and provide such fire protection/fire suppression plans coincident with the Government's acceptance of each new (or re-furbished) major building or facility. Such plans will include, as appropriate:

a. Basic information regarding construction features and materials, and characteristics (e.g. flammability, volatility, pathogenic properties, etc.) of stored materials.

b. Graphic plan(s) depicting layout and partitioning, location of installed fire suppression systems, location of doors, windows, stairwells, utilities and utilities shutoffs, material storage areas. Such plans will be updated as required and all will be reviewed at least once per year.

10. The Contractor shall review plans for new buildings/facilities construction, as well as additions to existing buildings and facilities, in order to become knowledgeable in fire protection requirements and possible fire hazards that may be present during construction. Plans are available for review in the appropriate ROICC office or in the Contractor's Civil Engineering office. The Contractor shall maintain a close working relationship with construction supervisors/ROICC personnel. Fire protection personnel will exercise their authority, per OPNAVINST 5100.23 (series), to stop work in instances where a fire hazard poses an immediate danger of personnel injury or substantial loss of property. Any ordered work stoppage shall be reported immediately to NUWC.

11. The Contractor shall participate in pre-acceptance tests conducted by the ROICC, and acceptance tests conducted by NAVFAC Fire Protection Engineers, of newly installed fire protection/fire suppression equipment in order to become knowledgeable in equipment location, type, inspection techniques, and test requirements.

12. The Contractor shall perform routine daily fire station housekeeping and Echelon One tests/maintenance of equipment and rolling stock. The Contractor shall test the Site 1 fire siren daily

at noon. The Contractor shall maintain a daily record of all such tests. Discrepant conditions shall be corrected as soon as possible.

13. The Contractor shall perform fire hazard/fire prevention inspections and equipment tests of all of AUTEC's buildings and facilities on a periodic basis in accordance with NAVFACINST 11320.22 (Series) and APP 11-3G. These shall include:

a. Weekly inspection of buildings and facilities under construction, alteration, or renovation.

b. Monthly inspection and reloading of fire hoses on emergency response vehicles if such hoses have not been used.

c. Monthly inspection, inventory, weighing, and maintenance of all portable pumps, hoses, and fire extinguishers installed in buildings, facilities, vehicles, aircraft, and open spaces. Fire extinguishers shall be serviced and recharged as necessary, in accordance with NFPA 10.

d. Monthly testing of installed fire protection/fire suppression systems.

e. Monthly, bi-monthly, quarterly, and annual inspections of buildings, facilities, and grounds are dictated by condition and specific use.

f. Yearly inspection and testing of all fire hydrants.

g. Annual test of all fire hoses including those on emergency response vehicles, aboard all of AUTEC's vessels, and those located in buildings, facilities, and open spaces.

h. Annual service test of all water pumps utilized for fire-fighting purposes. Such test shall also be conducted subsequent to any pump repair, in accordance with NFPA 1911.

14. The Contractor shall maintain a record of all such tests and inspections. Discrepant conditions shall be corrected as soon as possible.

15. The Contractor shall provide on-going training for all AUTEC personnel in fire protection awareness training and firefighting training, and schedule/conduct fire exit/evacuation drills on a periodic basis. (See also Chapter XV(3) of this Specification). Specifically:

a. Fire exit/evacuation drills shall be conducted as required by NAVFACINST 11320.22 (Series).

b. Fire exit/evacuation drills for the AUTEC school shall, as a minimum, be conducted in September and January of each year.

c. Training for downrange site personnel shall be conducted quarterly.

d. Personnel assigned to work aboard vessels and in high hazard areas will receive training in the use of immediately available equipment.

e. Managers, supervisors, and others in charge of specific work spaces will be provided training in inspection of buildings at closing times as required by NAVFACINST 11320.22 (Series).

16. The Contractor shall provide on-site standby firefighting services during potentially hazardous evolutions, such as when the fuel barge is being unloaded, or when otherwise requested by NUWC.

17. The Contractor shall control and issue flame-cutting and welding permits when such work is to be done on AUTEC vessels, buildings, structures, facilities, or construction projects. Permits for shipboard work shall require the setting of a qualified fire watch in any space on the opposite side of any bulkhead, deck, or overhead upon which such work is being performed. Permits for job site work shall also require a qualified fire watch. The fire watch shall be provided appropriate fire extinguishing equipment.

18. The Contractor shall control and issue controlled-burning permits for vegetation control and other open burning operations. All such burning shall be conducted under the supervision of fire department personnel. Such permits shall not be issued if humidity is below 30% or if the wind speed is in excess of 10 knots.

Burning shall not take place within 100 feet of any building or wooded area. Wood piles shall not exceed 20 feet in height.

19. The Contractor shall be prepared to fight fires in grass and wooded areas on and in the vicinity of Site 1. In the event of any such fire, the Contractor shall respond immediately if and when it is determined to be a threat to any AUTEC building, structure, or facility.

20. The Contractor shall be prepared to fight fires in the community if requested by local officials and approved by NUWC.

21. The Contractor's fire suppression personnel shall be trained as Hazardous Material Response Technicians, as described in Chapter XXII(2) of this Specification, and shall respond to oil and hazardous substance spills in accordance with AUTEC's Installation Spill Contingency Plan.

22. The Contractor shall provide dedicated EMTs and shall respond immediately to the scene of any accident involving personnel injury, or any other medical emergency or imminent medical emergency as delineated in OCD-(24)-04-XX, or as otherwise requested by NUWC. A minimum of 2 qualified EMTs shall be on duty at all times. Such EMTs shall be certified by the State of Florida, and shall be recertified every two years.

23. The Contractor shall provide aircraft crash/fire/rescue services in accordance with the requirements of NAVAIR 00-80R-14. Services shall be provided at the heliport at AUTEC's Site 1 for all arriving/departing helicopters provided under this contract and for other U.S. Government helicopters, or as may be requested by NUWC. On-site standby crash/fire/rescue services shall be provided at the Andros Town Airport for takeoffs, landings, and any aircraft refueling event involving U.S. Government or other aircraft when requested by NUWC. The Contractor shall immediately dispatch two (2) crash/fire/rescue vehicles to the scene in the event of an aircraft emergency.

24. The Contractor shall provide structural firefighting services as delineated in NAVFACINST 11320.22 (Series).

25. The Contractor shall be prepared to fight fires aboard any of AUTEC's vessels.

JA1-605
N61339-97-C-0001
P00053

26. The Contractor shall immediately dispatch at least one fire-fighting vehicle to the scene of any reported vehicle, vessel, or structural fire emergency.

27. AUTEC's Site 1 heliport is classified as a Category 2 airfield under criteria contained in NAVAIR 00-80-R-14, which requires the availability of two (2) 1,000 gallon capacity, 1,000 gallon per minute flow-rate aircraft crash/fire/rescue vehicles. In accordance with the requirements of APP 11-3G, if an AUTEC aircraft crash/fire/rescue vehicle is, or will be, out of service:

a. For up to 96 hours: The Contractor shall notify the U.S. Military Notice to Airmen (NOTAM) Office that the heliport is below minimum fire protection requirements. During such times, a structural fire fighting vehicle shall be used as a substitute.

b. For over 96 hours: In addition to the above, a Casualty Report (CASREP) shall be prepared, in Naval Message format, as described in NWP 10-1-10 detailing the cause of, and corrective parts/other assistance required to restore the vehicle to service.

28. The Contractor shall collect data, maintain records, and prepare/submit reports as may be required by the Applicable Documents cited in paragraph F. The Contractor shall maintain a log of all call-outs. If arson is suspected, the Contractor shall immediately notify NUWC. Summary No Loss Reports, and Fire Incident Reports shall be prepared and forwarded electronically to the Navy Safety Center using the Defense Fire Incident Reporting System. If a fire incident causes ≥$100,000 property damage, loss of life, or is of unusual origin, an Incident Report shall be prepared, in Naval Message format, within 24 hours as required by OPNAVINST 11320.25 (Series). A paper (hard copy) report shall be prepared within 14 days, for submission to the Navy Safety Center, of any Class A (fire) mishap (property damage ≥$1,000,000, loss of life, five hospitalized individuals, or any permanent total, or partial disability). The Contractor shall respond promptly to any special requests for data/reports.

29. The Contractor shall assist NUWC in the conduct of any fire protection inspections, surveys, audits, etc. required/conducted by outside authority, including the triennial Fire Protection Engineering

JA1-606
N61339-97-C-0001
P00053

Survey by the Navy Area Fire Marshal, required by NAVFACINST 11320.22 (Series).

30. Contractor fire protection personnel shall wear clean, neat, distinctive uniforms, name tags, and shoulder patches similar to those accepted/worn in the profession, but without corporate identity. Protective clothing and apparatus, meeting NFPA standards, shall be worn by firefighters during emergency response, on-site standby, and fire training evolutions.

31. The Contractor shall provide a Fire Chief who shall be qualified to organize and direct the administrative and operational functions of AUTEC's fire protection program. The person assigned must have at least 480 hours of formal training in the areas of fire prevention, fire fighting, and emergency first aid, as well as four or more years of full-time direct firefighting experience including two years of structural firefighting experience.

32. The Contractor shall provide personnel to maintain a watch at the Site 1 fire station alarm panel to monitor fire alarm systems, to receive emergency calls, and to dispatch/coordinate follow-up response via telephone, radio, or beeper in accordance with established procedures or as directed by higher authority. See also Chapter XXIII of this Specification.

33. The Contractor shall submit all NUWC-required technical and administrative reports, described in Chapter XXV of this Specification, as pertain to support of AUTEC's fire protection function.

## D. WORKLOAD FACTORS

1. The Contractor shall provide the services of a Fire Chief, a Fire Inspector, and 19 fire fighters.

2. Structural firefighting services shall be provided at AUTEC, Andros Island Site 1, 24 hours per day, 365 days per year. On-duty manning shall meet the requirements of NAVFACINST 11320.22 (Series).

3. Aircraft crash/rescue services shall be provided at AUTEC, Andros Island during daylight hours, 365 days per year. Extended hours are sometimes necessary, and emergency support must be available at all times. On-duty manning shall meet the requirements of NAVAIR 00-80R-14 for a Category 2 airfield.

4. The Site 1 Fire Department alarm panel shall be manned 24 hours per day, 365 days per year.

5. Emergency medical services shall be available 24 hours per day, 365 days per year.

## E. KEY PERSONNEL/PERSONNEL QUALIFICATIONS

1. Key Personnel: None.

2. Personnel Qualifications:

a. Fire Chief To successfully execute the tasks and responsibilities described, the person assigned should as a minimum:

1. Have excellent knowledge of fire prevention and firefighting techniques and methodologies.

2. Have demonstrated organizational, administrative, and motivational skills, and two years supervisory experience in a full-time fire department.

3. (Must) have at least 480 hours of formal training in the areas of fire prevention, firefighting, and emergency first aid.

4. (Must) have four or more years of full-time direct firefighting experience, including two years of structural firefighting experience.

5. Have good verbal and written communications skills.

b. EMTs Emergency Medical Technicians shall be currently certified by the State of Florida, or other state with similar requirements.

## F. APPLICABLE DOCUMENTS

| | |
|---|---|
| Final Governing Standards for Andros Island; | Prepared by Commander in Chief, U.S. Atlantic Fleet (CINCLANTFLT) |
| DoD 6055.7-M; | Fire Incident Reporting Manual |

- - - - - *deleted* - - - - -

| | |
|---|---|
| Naval Warfare Publication (NWP) 10-1-10; | Operational Reports |
| OPNAVINST 5100.12 (Series); | Navy Traffic Safety Program |
| OPNAVINST 5100.23 (Series); | Navy Occupational Safety and Health (NAVOSH) Program |
| OPNAVINST 11320.23 (Series); | Shore Activities Fire Protection Program |
| OPNAVINST 11320.25 (Series); | Reporting of Fires and Other Emergencies at Naval Shore Activities, Commands, and Facilities |
| NAVFACINST 11320.22 (Series); | Navy Shore Establishment Fire Protection/Prevention Program |

JA1-608a
N61339-97-C-0001
P00001

NAVFAC P-1021; Navy Shore Establishment Fire Protection/Prevention Program

| | |
|---|---|
| NAVMEDCOMINST 6700.9 (Series); | Ambulance Support |
| NAVAIR 00-80R-14; | Navy Aircraft Firefighting and Rescue Manual |
| NAVSEA OP-5; | Ammunition and Explosives ashore, Safety Regulations for Handling, Storing, Production, Renovation, and Shipping |

National Fire Protection Association (NFPA) National Fire Codes

| | |
|---|---|
| OCD-(21.1)-20-XX; | Marine Cutting and Welding Safety Procedures |
| OCD-(18)-71-XX; | Dockside Fueling |

- - - - - *deleted* - - - - -

| | |
|---|---|
| OCD-(24)-04-XX; | Emergency Medical Services |
| Other OCDs; | Relevant/Related OCDs as may be listed in Table XV-4 |
| APP 2-109G; | Air Evacuations: Medical Emergencies and Deaths |
| APP 4-13G; | Key and Lock Control Program |
| APP 4-18G; | Security and Boarding Procedures for Aircraft Passengers and Baggage |
| APP 4-21G; | Mass Casualty Plan |
| APP 8-36G; | Self-Help Projects |
| APP 11-3G; | Fire Protection Policy |
| APP 11-5G; | Hurricane Plan, Andros Ranges |
| APP 11-8G; | Hazardous Materials Control and Management Program |

| | |
|---|---|
| APP 11-12G; | Policy for AUTEC Project Bloodborne Pathogens (BBP) Program |
| APP 11-13G; | Hazardous Waste Management Policy |
| APP 11-17G; | Chemical Laboratory Hygiene |

AUTEC Aviation Pre-Mishap Plan

AUTEC's Installation Spill Contingency Plan

# SITE 1

## FIREFIGHTING AND EMERGENCY EQUIPMENT

### A. VEHICLES

**1. Crash/Fire/Rescue Vehicles**: Two P-19, all terrain units, 1,000 GPM capability. Vehicles carry additional extinguishing agents as well as water and foam. These vehicles carry a variety of tools, equipment, and airpacks which are needed for firefighting tactics.

**2. Structural Pumpers:** Two, 1,000 GPM units. Each of these vehicles carries a full compliment of firefighting equipment. Both pumpers are capable of foam discharge.

**3. Medical Ambulance**: One, modular type. This unit carries basic, as well as advanced, life support equipment.

### B. HAZARDOUS MATERIALS

**1. Response Trailer**: This trailer can be utilized for needed emergencies such as spills and release of hazardous substances and can be towed by pickup truck. This vehicle carries absorbent materials, various personnel protection suits, spill recovery kits, recovery drums, various small hand tools.

### C. FIRE STATION

**1. Other Equipment**: Smoke simulator for training, hand tools and saws, four CPR training mannequins, fire extinguisher filling station and agents used for such.

# XXV. REPORTS AND DATA FILES

## A. GENERAL

In addition to records, reports, and accounting information required by Federal Acquisition Regulations (FARs) for general contract oversight and administration (see Section I of this Contract), NUWC requires other technical and administrative reports, of specific content and format, both for record purposes and as a basis for making management decisions. Such reports and related data bases are also in addition to work-specific reports required by reference in other Chapters of this Specification.

## B. DESCRIPTION

NUWC depends upon the AUTEC Maintenance and Operation (M&O) Contractor to carry out the day-to-day activities required to meet mission objectives. To meet its overall responsibilities for management, operation, and administration of AUTEC, NUWC needs to be constantly apprised of AUTEC's physical and financial status, and the work-loading/usage of facilities and test support systems. To satisfy these needs, NUWC has developed an AUTEC Information System (IS) for compiling and distributing record data encompassing all aspects of the AUTEC Program.

## C. CONTRACTOR RESPONSIBILITIES

1. The Contractor shall support AUTEC's IS program in accordance with the Workload Factors given in paragraph D, Applicable Documents cited in paragraph F, and other requirements stated below. Special requirements may be tasked by NUWC Work Order or Letter of Direction.

2. The Contractor shall collect data, maintain records, and prepare/submit all NUWC-required general, technical, and administrative reports listed in Table XXV-1 as pertain to performance of this Contract. The Contractor shall submit all reports by the due-dates indicated. The Contractor shall respond promptly to any special requests for data/reports. Report formats and data files shall be as described in AUTEC Reference Document; Contract Reports and Data File Descriptions.

3. The Contractor shall utilize AUTEC's VAX 4705A computer system (see Chapter VI(2) of this Specification) for purposes of supporting the tasks described herein. The Contractor shall maintain all AUTEC IS data bases through prompt entry (as required by each data base) of all applicable raw data.

4. The Contractor shall provide adequate, qualified, data-entry personnel to support AUTEC's IS requirements.

5. The Contractor shall maintain a library of archived data and reports consisting primarily of electronic media. With the concurrence of NUWC, the Contractor shall establish procedures for inventory and periodic data purging, media degausing, and media recertification.

6. The Contractor shall submit all NUWC-required technical and administrative reports, described in Table XXV-1, as pertain to support of AUTEC's IS requirements.

## D. WORKLOAD FACTORS

1. VAX 4705A data entry support is required during the normal workday at AUTEC's West Palm Beach Headquarters.

2. Report preparation requirements may be derived from the information provided.

## E. KEY PERSONNEL/PERSONNEL QUALIFICATIONS

None.

## F. APPLICABLE DOCUMENTS

| | |
|---|---|
| AUTEC Reference Document; | Contract Reports and Data File Descriptions |
| Other OCDs; | Relevant/Related OCDs as may be listed in Table XV-4 |

# NUWC REQUIRED GENERAL, TECHNICAL, AND ADMINISTRATIVE REPORTS AND DATA FILES

| ITEM NO. | TITLE (CDRL NO.) | DESCRIPTION | RECOMMENDATIONS | PERIODICITY/ DUE DATE | SUPPORTED BY IS SOFTWARE | DISTRIBUTION |
|---|---|---|---|---|---|---|
| **1A.** | Monthly Progress Report (CDRL-A001) (CDRL-B001) | Letter report posted to the servers with narrative overview of significant happenings, and status/progress against specific milestones. Includes an accounting of all otherwise-required reports submitted for the month, as well as the contractor's most recent organizational chart. Appendices and Attachments will be included to document Management activity, Cost reductions and fuel usage. Appendix A will list CDRL reports submitted for the month. Appendix B will document the Cost Analysis for the month. Attachment 1 will consist of the Utilities and Fuel usage report for the month to include fuel utilization by individual aircraft and vessel as well as the overall fuel usage report for the month.<br>This report will be done in a format similar to the Contractor's Self-Assessment reports submitted quarterly and semi-annually. This report will not be submitted on the months when the self-assessment is submitted to limit reporting redundancy. | | Monthly/ 8th Working Day | | NUWC CODE: 705<br>Accessed electronically by other concerned parties. |
| | | . | | | Yes<br>Yes | NUWC CODE: 705<br>Accessed electronically |

Table XXV-1

| ITEM NO. | TITLE (CDRL NO.) | DESCRIPTION | RECOMMENDATIONS | PERIODICITY/ DUE DATE | SUPPORTED BY IS SOFTWARE | DISTRIBUTION |
|---|---|---|---|---|---|---|
| | | | | | | by other concerned parties. |

Table XXV-1

## NUWC REQUIRED GENERAL, TECHNICAL, AND ADMINISTRATIVE REPORTS AND DATA FILES

| ITEM NO. | TITLE (CDRL NO.) | DESCRIPTION | RECOMMENDATIONS | PERIODICITY/ DUE DATE | SUPPORTED BY IS SOFTWARE | DISTRIBUTION |
|---|---|---|---|---|---|---|
| **3.** | Monthly Cost Control Report (CDRL-A003) | Letter report posted electronically to the servers with narrative overview of cost control initiatives undertaken by Specification Chapter, achievements, variances, and cost recoveries realized. A table of costs at the voucher line item level, comparing contract amount, monthly (and quarterly) actual, year-to-date actual, estimate to completion, and variance between the contract and ETC amount for all voucher costs shall be provided. The quarterly update shall include an analysis of the original contract year plan versus the current projected cost and an explanation for the need for the revision from the original plan. Detailed information shall be provided by Specification Chapter/Section. Data supporting fringe rate changes will be included when they occur. | | Monthly/ 8th Working Day | | NUWC CODE:<br>705<br>7005<br>7006<br>7007<br>591 (Oliver/B-11)<br>73 (J. O'Sullivan/B-103) |

Table XXV-1 (cont.)

## NUWC REQUIRED GENERAL, TECHNICAL, AND ADMINISTRATIVE REPORTS AND DATA FILES

| ITEM NO. | TITLE (CDRL NO.) | DESCRIPTION | RECOMMENDATIONS | PERIODICITY/ DUE DATE | SUPPORTED BY IS SOFTWARE | DISTRIBUTION |
|---|---|---|---|---|---|---|
| 4A. | Systems/ Equipment Outage/Restoration Report | E-mail notification of electronically posted report documenting operations support systems and equipment failures, impact, estimated requirements to correct, and subsequently, restoration to service. | OCD-(01)-21-XX | As Occurring | | NUWC CODE: 705 |
| 4B. | Systems/Equipment Outage/Restoration Report | Posted electronic copy on local server. | | As Occurring | | Accessed electronically by all concerned parties. |
| 5. | Range Operations Equipment Status Report | Status of all operations support systems and equipment. | | Daily | Yes | Accessed electronically by all concerned parties |
| 6. | Range Resources Utilization Report Data File | A data file containing the previous month's detailed usage of AUTEC range's assets categorized by test number and date. | OCD-(04.1)-20-XX | Monthly/ 6th Working Day | Yes | NUWC CODE: 7007 |
| **7.** | Reserved for future use. | | | | | |

Table XXV-1 (cont.)

# NUWC REQUIRED GENERAL, TECHNICAL, AND ADMINISTRATIVE REPORTS AND DATA FILES

| ITEM NO. | TITLE (CDRL NO.) | DESCRIPTION | RECOMMENDATIONS | PERIODICITY/ DUE DATE | SUPPORTED BY IS SOFTWARE | DISTRIBUTION |
|---|---|---|---|---|---|---|
| **8.** | Monthly Journal Voucher Entry Data File | A data file containing detailed current month cost and labor data summarized by Work Order Number, contract year, Performing Specification Chapter/Subchapter, benefitting Specification Chapter/Subchapter expense element, cost category and location code. Note: Data file submitted on 6th Working Day shall include all of the previous month's data. | | Semi-Monthly/ 6th Working Day, 5 working days after interim closing | Yes | NUWC CODE: 7007 |
| **9.** | Aircraft Passenger Seat Data File | A data file containing a summary by Work Order Number of Contractor, NUWC, and Range User passengers. | | Monthly/ 6th Working Day | Yes | NUWC CODE: 7007 |
| **10.** | Job Order Status Report | Electronic report provided via e-mail, showing Federal Supply System expenditures, budgeted amounts, and percent of funds accrued, listed by NUWC-provided Government expense elements, for the current and previous two Government fiscal years (1 October – 31 September) | | Weekly | Yes | NUWC CODES: 7007 705 |
| **11A.** | Food Services Cost Analysis Report | Letter report posted electronically to the local server citing beginning and ending inventory values, values of purchases, number of issues, number of rations served by category, dollar value of sales, value of food lost through spoilage, and computed average daily ration cost. | | Quarterly 10th Working Day | Yes | NUWC CODES: 705(1) 7007(1) Accessed electronically by other concerned parties. |
| **12B.** | Non Purchase Order Billings Data File | (RSE recommends deletion of the paper version of this report as indications from NUWC are that the data file is utilized exclusively for their purposes.) A data file containing detailed non purchase order billing data. | | Monthly/ 8th Working Day | Yes Yes | NUWC CODES: 705 7007 7007 |
| **13.** | Government Property Missing, Lost, Stolen or | Letter report documenting items of Government property, custodied to the Contractor, which | SECNAVINST 5500.4 (Series) | As Occurring | | NUWC CODES: 705 (electronic) |

Table XXV-1 (cont.)

| | | | | | | |
|---|---|---|---|---|---|---|
| | Recovered Report | cannot be located, together with a report of investigation. | | | | 7007 (paper) |

Table XXV-1 (cont.)

## NUWC REQUIRED GENERAL, TECHNICAL, AND ADMINISTRATIVE REPORTS AND DATA FILES

| ITEM NO. | TITLE (CDRL NO.) | DESCRIPTION | RECOMMENDATIONS | PERIODICITY/ DUE DATE | SUPPORTED BY IS SOFTWARE | DISTRIBUTION |
|---|---|---|---|---|---|---|
| **14.** | Property Control Audit Report | Letter report describing the results of the Contractor's inventories of Government Furnished Property (GFP) (required by FAR). Narrative description of scope and results. | | As Occurring (Annual Completion) | | NUWC CODES: 7007 705 |
| **15.** | Issues from Inventory Data Files | Two data files:<br>1. Detailed list of all items that were reported as issues from inventory for the previous month. This includes warehouse issues, Photo Lab supplies, Carpenter Shop supplies, Data Processing supplies, Warehouse Turn-Ins, Gas Station receipts, fuel purchases, etc.<br>2. A Summary by Work Order Number of the above. | | Monthly/ 6th Working Day | Yes | NUWC CODE: 7007 |
| **16.** | Range Scheduling | Provides on-going AUTEC schedule by Test Number, date/times, AUTEC resources required/scheduled. Formatted outputs show daily, weekly, monthly, and quarterly schedules. | | Updated daily or as changes (additions, deletions) are received. | Yes | Accessed electronically by all concerned parties. |
| **17.** | Purchase Order Obligation Reporting System Data File | A data file containing detailed information on all open purchase requisitions as well as all purchase requisitions that have been closed for less than 12 months. | | Weekly | Yes | NUWC CODE: 7007 |
| **18.** | Fleet Asset Utilization Data File | A data file containing detailed data of fleet platforms utilized to support range testing. | | Monthly/ 6th Working Day | Yes | NUWC CODE: 7007 |

Table XXV-1 (cont.)

Table XXV-1 (cont.)

## NUWC REQUIRED GENERAL, TECHNICAL, AND ADMINISTRATIVE REPORTS AND DATA FILES

| ITEM NO. | TITLE (CDRL NO.) | DESCRIPTION | RECOMMENDATIONS | PERIODICITY/ DUE DATE | SUPPORTED BY IS SOFTWARE | DISTRIBUTION |
|---|---|---|---|---|---|---|
| **19.** | Weapon/Target Summary Data File | A data file containing detailed data of all weapon and target firings and recoveries. Mobile and live targets will be included as well as all simulated weapon firings. | | Monthly/ 6th Working Day | Yes | NUWC CODE: 7007 |
| **20A.** | Organizational Listing | Letter report with detailed list, by Specification Chapter/SubChapter (e.g. number and title) and Contractor's sequence number within, to include (for each sequence number listed): location; department; employee name (or vacancy); full time equivalency; Government labor category; position title; function performed; cost category; key person indicator; and company identifier for all contract, subcontract, and non-contract employees. | | Monthly/ 6th Working Day | | NUWC CODE: 705 - - - - deleted - - - - |
| **20B.** | Organizational Matrix | Letter report with summary list by Specification Chapter/SubChapter providing employee counts by cost category, including contract, sub-contract, and non-contract employees. | | Monthly/ 6th Working Day | | NUWC CODE: 705(1) - - - - deleted - - -- |
| **20C.** | Organization Data Files | Data files in report format will be posted on the local server for both of the above. | | Monthly/ 6th Working Day | Yes | Accessed electronically by all concerned parties. |

Table XXV-1 (cont.)

# NUWC REQUIRED GENERAL, TECHNICAL, AND ADMINISTRATIVE REPORTS AND DATA FILES

| ITEM NO. | TITLE (CDRL NO.) | DESCRIPTION | RECOMMENDATIONS | PERIODICITY/ DUE DATE | SUPPORTED BY IS SOFTWARE | DISTRIBUTION |
|---|---|---|---|---|---|---|
| 21A. | Aviation Report | Letter report posted to the local servers providing:<br>1. AUTEC helicopter utilization: Lists flight hours, flights, cargo and passengers transported, units launched and recovered, range support and test hours by aircraft registration number.<br>2. AUTEC fixed-wing aircraft utilization: Lists number and types of flights, cargo and passengers transported, and flight-related comments by aircraft registration number.<br>3. AUTEC Helicopter, fixed wing and visiting aircraft jet fuel utilization.<br>4. Visiting helo and fixed-wing aircraft support provided.<br>5. Charter aircraft utilization. | | Monthly/<br>6th Working Day | | NUWC CODE:<br>705<br>Accessed electronically by other concerned parties. |
| 22A. | Six Month Performance Evaluation Presentation | Narrative and graphical summary report posted electronically to the servers of the Contractor's efforts and progress for the preceding six month period. Quantifies actual workload (monthly, semi-annual, or annual accomplishments) against stated workload items required by, and corrects the content/status of tabular data and listings included in each contract Specification Chapter/Section. Addresses each performance evaluation criteria described for accessing the award fee. | | Semi-Annually/ 10th Working Day after the end of the evaluation period | No | NUWC CODE:<br>705<br>All members of the Performance Evaluation Board<br>Accessed electronically by other concerned parties. |
| 23. | Real Time Test Event Logs | Chronological record(s) of test events as occurring during the course of operations. | OCD-(04.1)-05-XX | Per test/event as described in referenced OCD | | Filed for record purposes |

Table XXV-1 (cont.)

## NUWC REQUIRED GENERAL, TECHNICAL, AND ADMINISTRATIVE REPORTS AND DATA FILES

| ITEM NO. | TITLE (CDRL NO.) | DESCRIPTION | RECOMMENDATIONS | PERIODICITY/ DUE DATE | SUPPORTED BY IS SOFTWARE | DISTRIBUTION |
|---|---|---|---|---|---|---|
| 24A. | Business Call Billing Report | Computerized listing of all business calls made through the Andros telephone switch during an established billing period. | APP 8-11 G | Monthly/ 6th Working Day | Yes | NUWC CODES: 73 7007 |
| 24B. | A T & T Phone Charges Data File | A data File containing total telephone charges by Work Order Number for all A T & T telephone calls made from Andros Island. | | Monthly/ 6th Working Day | Yes | 7007 |
| 25A. | | | | | No | NUWC CODE: 705 |
| 26. | Fixed Wing Aircraft Passenger Utilization Report | Letter report providing fixed wing aircraft passenger loading broken out by day of the week, specific flight of each day, and by passenger priorities. | | Semi-Annually/ 15-Apr and 15-Oct | Yes | NUWC CODES: 7007 705 |

Table XXV-1 (cont.)

# NUWC REQUIRED GENERAL, TECHNICAL, AND ADMINISTRATIVE REPORTS AND DATA FILES

| ITEM NO. | TITLE (CDRL NO.) | DESCRIPTION | RECOMMENDATIONS | PERIODICITY/ DUE DATE | SUPPORTED BY IS SOFTWARE | DISTRIBUTION |
|---|---|---|---|---|---|---|
| 27A. | Space Available/ Morale and Welfare Flight Usage Report | Letter report, posted to the local servers for the preceeding six month period, providing an accounting of the use of fixed wing aircraft for space available/morale and welfare purposes. Includes date and departure/destination points of each flight, total hours involved, applicable flight-hour rate for the type usage and the resultant calculated cost, and the actual cost recovery credited to the contract. Reports shall be submitted for the first (1 Oct previous calendar through 31 March of the current year) and second (1 April through 30 Sept) six month periods of the Government Fiscal Year. The end of year accounting is to show both the current six month and the Government Fiscal Year total accumulated costs and Cost Recoveries. | | Semi-Annually/ 10th Working Day after the end of the reporting period | No | NUWC CODE: 705(1)<br>Accessed electronically by other concerned parties. |
| | | | As this information is included in the EAC provided in the Cost Control Report, this item should be deleted. | | No<br>No | NUWC CODES: 705<br>NUWC CODE: 705 |

Table XXV-1 (cont.)

## NUWC REQUIRED GENERAL, TECHNICAL, AND ADMINISTRATIVE REPORTS AND DATA FILES

| ITEM NO. | TITLE (CDRL NO.) | DESCRIPTION | RECOMMENDATIONS | PERIODICITY/ DUE DATE | SUPPORTED BY IS SOFTWARE | DISTRIBUTION |
|---|---|---|---|---|---|---|
| | | | RSE recommends that this report be deleted. Any fringe rate changes will be addressed in the Cost Control Report when they occur. | | No | NUWC CODE:<br>705<br>591 Oliver (B-11)<br>73 (J. O'Sullivan) B-103 |
| 30A. | | | The IMUP information provided at the PEB each quarter contains this information. Therefore, RSE recommends deletion of this CDRL. | | No | NUWC CODES:<br>705<br>Accessed electronically by other concerned parties. |
| 31. | Open Purchase Food Report | A computer-generated listing of all open purchase food procurements for the previous year. | | Annually 15 April | Yes | NUWC CODE:<br>73(WPB) Blau |

Table XXV-1 (cont.)

# NUWC REQUIRED GENERAL, TECHNICAL, AND ADMINISTRATIVE REPORTS AND DATA FILES

| ITEM NO. | TITLE (CDRL NO.) | DESCRIPTION | RECOMMENDATIONS | PERIODICITY/ DUE DATE | SUPPORTED BY IS SOFTWARE | DISTRIBUTION |
|---|---|---|---|---|---|---|
| | | . | This report should be deleted as this information is addressed as part of the budget planning meetings held each quarter by the PEB members. | | | NUWC CODE: 705<br>Accessed electronically by other concerned parties. |
| **33.** | Depreciation Report | Letter report, for the preceeding twelve month period, containing a list of all items and equipment being depreciated, to include: the book values at the beginning and end of each period; and the dollar amounts depreciated. | | Annually/ 15-Apr | | NUWC CODE: 705 |
| **34.** | Aircraft Cargo Data File | A Data File containing a summary by Work Order number of the pounds and cubic feet of Range User Cargo transported to and from CONUS on the AUTEC fixed-wing aircraft. | | Monthly/ 6th Working Day | Yes | NUWC CODE: 7007 |
| **35.** | MSC Barge Shipments Data File | A Data File containing a summary by Voyage date, of all cargo received/shipped:<br>1. Voyage date.<br>2. Item Transportation Control Number.<br>3. Test or Work Order Number (As Applicable).<br>4. Commodity Code/Commodity Description/Volume ($ft^3$)<br>5. Related requisition number.<br>6. Applicable Specification Chapter/Sub-chapter. | | Monthly/ 6th Working Day | Yes | NUWC CODES: 7007 |

Table XXV-1 (cont.)

| ITEM NO. | TITLE (CDRL NO.) | DESCRIPTION | RECOMMENDATIONS | PERIODICITY/ DUE DATE | SUPPORTED BY IS SOFTWARE | DISTRIBUTION |
|---|---|---|---|---|---|---|
| **36.** | Contract Modification Proposal | A detailed report documenting all cost and technical changes associated with the required Specification changes. This report shall be provided in accordance with the requirements of Attachment 5 to Section J and Section C, Provision C-2. | | As Required | | NUWC Code 591 (Oliver) |
| | | | This report should be deleted as G&A is controlled with a contract ceiling and therefore regular reporting is unnecessary. | | No | NUWC CODES:<br>7007<br>705(1)<br>591 Oliver (B-11)<br>73 (J. O'Sullivan) B-103 |

Table XXV-1 (cont.)

# XXVI. DEPENDENT EDUCATION

## A. GENERAL

The AUTEC school at Site 1 on Andros Island provides for the education of dependent children of Government and non-indigenous Contractor personnel. The school encompasses grades kindergarten through twelve.

## B. DESCRIPTION

1. The Government provides and maintains the AUTEC school facility, and pays all expenses, including staffing costs, books, curriculum materials, etc. necessary to meet the minimum accreditation requirements of the Southern Association of Colleges and Schools.

2. Any expenses beyond those necessary to meet the minimum accreditation requirements must be defrayed by a pro-rata tuition fee approved by the AUTEC School Board. At the end of each school year the School Board decides what staff, materials, equipment, etc. shall be provided beyond those required to meet minimum standards and establishes the tuition fee for the following school year.

3. The governing body of the school, the AUTEC School Board, is responsible for formulating policies relevant to the school's programs, operation, and budget. The School Board consists of:

a. Voting Members:

1. Project Manager (Contractor).

2. Head, AUTEC Range Operations (Code 7006).

3. Officer-in-Charge (U.S.Navy) (Code 05).

4. President of the Citizen-Parent-Teacher League.

5. Member at Large of the Citizen-Parent-Teacher League.

b. Non-Voting Members:

1. AUTEC School Administrator (Contractor).

2. Employee Relations Manager (or equivalent) (Contractor).

## C. CONTRACTOR RESPONSIBILITIES

1. The Contractor shall support the AUTEC school program in accordance with the Workload Factors given in paragraph D, Applicable Documents cited in paragraph F, and other requirements stated below. Special requirements may be tasked by NUWC Work Order or Letter of Direction.

2. The Contractor shall maintain the AUTEC school facility.

3. The Contractor shall provide a School Administrator, qualified to ensure that the school is operated in accordance with applicable documents and the minimum accreditation standards cited, and to act as an advisor to the School Board on educational matters, and to implement the decisions of the School Board.

4. The Contractor shall provide a staff for the AUTEC school as dictated by the number/grade levels of the actual student population and the minimum accreditation standards cited. The Contractor shall provide additional staff as agreed to by the School Board.

5. The Contractor shall procure all requisite school supplies, materials, and equipment.

6. At the end of each school year the Contractor shall submit a proposed budget, for the following year, to the School Board. The budget will include the projected cost per student to sustain minimum accreditation standards plus the cost of additional books, curriculum, other purchased materials, and staff, in excess thereof, as deemed desirable. Subsequent to the decision(s) of the School Board, the Contractor shall establish the per-student tuition fee necessary to support the added budget requirements for the forthcoming school year.

7. The Contractor shall assess and collect the aforementioned tuition fees from Contractor personnel (reimbursement for costs associated with the education of dependent children of Government employees is handled separately by the Government). At the end of each school year, any fee amounts collected from Contractor employees, in excess of actual costs, shall be refunded on a pro-rata basis. Actual costs, above minimum accreditation requirements, shall be reimbursed to the Government and reported in the Monthly Cost Control Report (see Chapters XXI(1) and XXV of this Specification).

8. The Contractor shall submit all NUWC-required technical and administrative reports, described in Chapter XXV of this Specification, as pertain to support of the AUTEC school program.

## D. WORKLOAD FACTORS

1. The AUTEC school has a capacity of approximately 100 children, however the population varies considerably from year to year.

2. The school shall operate for the number of days each year as required by the accreditation authority cited.

## E. KEY PERSONNEL/PERSONNEL QUALIFICATIONS

1. Key Personnel: None.

2. Personnel Qualifications:

a. School Administrator To successfully execute the tasks and responsibilities described, the person assigned should as a minimum:

1. Have a Bachelors Degree in Education and a Masters Degree in Education or related applicable field.

2. Have 10 years experience in grade school/high school education.

3. Have three years experience in grade school/high school administration.

## F. APPLICABLE DOCUMENTS

Standards Required for Accreditation of U.S. Type Schools in Latin America; Southern Association of Colleges and Schools (current version)

APP 8-38G; AUTEC School Policy and Procedures

# XXVII. WELFARE AND RECREATION

## A. GENERAL

Boredom resulting from the remote nature of AUTEC's Andros Island location and the lack of entertainment and recreational facilities and programs available in the local community is a recognized quality of life issue. To promote morale in general, and to assist in the retention of qualified personnel assigned to AUTEC's Andros Island sites, an AUTEC Recreation Association (ARA) has been established. Because the ARA must operate without benefit of appropriated funds, profits generated by various unfunded retail facilities and services, which in themselves help to improve the quality of life on-base, are utilized for this purpose.

## B. DESCRIPTION

The ARA provides an organization which gives all AUTEC personnel and their dependents an opportunity to participate in social, athletic, educational, and recreational programs and events.

Funds to support ARA activities and programs are derived from the profits generated through operation of a retail store, three lounges, a snack bar, a barber/beauty shop, and through retail fuel sales both at the base service station and at Harrison Wharf at Site 1 on Andros Island. Appropriated funds may not be utilized.

The Government will provide the space to operate/provide the aforementioned retail services, however all expenses incurred must be supported by their operation and are not chargeable against this contract. The Government additionally provides a Continuing Education Satellite System whereby the ARA may arrange for, and make available degree programs, as well as specific college-level courses to interested persons.

## C. CONTRACTOR RESPONSIBILITIES

1. The Contractor shall organize, operate, and coordinate the functions of an AUTEC Recreation Association in accordance with the Workload Factors given in paragraph D, Applicable Documents cited in paragraph F, and other requirements stated below.

2. The Contractor shall ensure that membership in the ARA is automatic for all non-indigenous personnel, (e.g. Government, Contractor, etc.) permanently assigned to AUTEC, and for their dependents. All personnel whether permanently assigned, temporarily assigned, or visiting shall be allowed to participate in ARA activities and programs.

3. The Contractor shall ensure that the programs and activities sponsored by the ARA are representative of the interests and desires of the total membership.

4. The Contractor shall provide for the maintenance and operation of those retail facilities and services whose profits currently support ARA activities and program. Expenses incurred to operate these facilities and to provide such services shall be calculated by the Contractor and included in prices established by the Contractor. Any proposed changes, additions, or deletions to established retail activities shall be approved by NUWC.

5. The Contractor shall be responsible for the initial and subsequent purchase of inventory items for the aforementioned retail activities. (The Contractor, with the exception of fuel stocks, owns the inventory.) See Section H, Special Contract Requirements, and Chapter XX(2) of this Specification. Fuels sold through ARA's retail outlet will be obtained from the Site 1 diesel and MOGAS bulk storage tanks (see also Chapter XX(2) of this Specification). ARA shall reimburse the Contractor each month for the cost of fuels sold, based upon a per-gallon price provided by NUWC.

The ARA may also obtain food and beverage items, for resale, from commissary stores procured in bulk to support AUTEC's food service requirements (see also Chapter XXI(4) of this Specification). ARA shall similarly reimburse the Contractor each month for the cost of such food items.

6. The Contractor shall develop an annual budget for the ARA, based upon projected revenues and expenses. A copy of this budget will be provided to NUWC. The Contractor shall provide a monthly accounting report, of ARA funds, to NUWC for review. Such accounting shall include: gross sales and expense information, categorized by each retail activity, for the quarter and for the year; the balance for the quarter, and the balance for the year to date. Report required by the 10th working day of each succeeding month.

7. The Contractor shall submit all NUWC-required technical and administrative reports, described in Chapter XXV of this Specification, as pertain to support of AUTEC's Welfare and Recreation program.

D. **WORKLOAD FACTORS**

1. The retail store carries approximately 5,500 general merchandise items, 3,500 grocery items and 175 liquor items.

2. Typical operating hours and services offered by the retail facilities at Site 1 on Andros Island are:

a. Food and Beverage Service:

1. Lighthouse Cafe

| | | |
|---|---|---|
| Breakfast/Lunch/Dinner | Mon-Sun | 0800-2230 |
| Breakfast (only) | Sat only | 0800-1030 |

2. Beach House

| | |
|---|---|
| Thurs-Tues | 1100-1900 |
| Wed | 1100-2230 |

3. TOTO Pub

| | |
|---|---|
| Mon-Thurs | 1700-2400 |
| Fri | 1700-0100 |
| Sat-Sun | Closed |

4. Thousand Fathoms Club

| | |
|---|---|
| Mon-Thurs | 1700-0100 |
| Fri-Sat | 1700-0200 |
| Sun | 1200-2400 |

b. Retail Store:

| | |
|---|---|
| Mon-Fri | 1100-1315 |
| | 1600-1900 |
| Sat | 0900-1200 |
| Sun/Holidays | Closed |

c. Barber/Beauty Shop: Mon-Fri 0900-1900

| | |
|---|---|
| Sat | 0800-1800 |
| (by appointment only) | |
| Sun/Holidays | Closed |

d. Retail Fuel Sales:

1. Base Service Station

| | |
|---|---|
| Mon-Fri | 0715-1600 |
| Sat: | 0700-1200 |
| Sun: | Closed |

2. Harrison Wharf

As Determined by ARA

## E. KEY PERSONNEL

None.

## F. APPLICABLE DOCUMENTS

| | |
|---|---|
| APP 2-2G; | AUTEC Recreational Association (ARA) |
| APP 2-74G; | ARA Marina |
| APP 2-107G; | Recreational Diving & Swimming |
| APP 2-115G; | Recreational Clubs & Social Groups |

- - - - - *deleted* - - - - -

| | |
|---|---|
| APP 7-16G; | ARA Auto Staging Area |
| APP 8-25G; | AUTEC Waterfront Procedures and Regulations |
| APP 8-36G; | Self-Help Projects |
| APP 8-39G; | Solicitation and Commercial Activities |
| APP 8-41G; | AUTEC Project Solid Waste Recycling Program |
| APP 8-44G; | Lost, Abandoned or Unclaimed Privately Owned Personal Property |
| APP 11-3G; | Fire Protection Policy |

ATTACHMENT (1)

SPECIFICATION

**TABLE OF CONTENTS**

GLOSSARY ..... JA1-xiv

I. Introduction ..... JA1-1
- A. Mission.JA1-1
- B. General..... JA1-1
- C. Description..... JA1-2
- D. Tasking.JA1-3
- E. Concept of Maintenance and Operation (M&O)..... JA1-3
- F. Future Capabilities ..... JA1-5
  - 1. - - - - - *deleted* - - - - -
  - 2. - - - - - *deleted* - - - - -
  - 3. - - - - - *deleted* - - - - -
  - 4. - - - - - *deleted* - - - - -
  - 5. AUTEC Hydrophone Replacement Program (AHRP) ..... JA1-7
  - 6. Advanced Radiated Noise Measurement System ..... JA1-7
    - - - - - *deleted* - - - - -
- G. Contractor Responsibilities..... JA1-8
- H. Key Personnel/Personnel Qualifications ..... JA1-9
- I. Applicable Documents ..... JA1-10

II. Range Data Acquisition Systems..... JA1-23
- 1. Weapons Range..... JA1-23
  - A. General..... JA1-23
  - B. Description ..... JA1-23
    - 1. In-Water Tracking System ..... JA1-23
    - 2. In-Air Tracking System..... JA1-26
    - 3. Real Time Display Centers (RTDCs) ..... JA1-29
  - C. Contractor Responsibilities ..... JA1-29
  - D. Workload Factors..... JA1-33
    - 1. In-Water Tracking Systems ..... JA1-33
    - 2. In-Air Tracking Systems..... JA1-34
  - E. Key Personnel/Personnel Qualifications ..... JA1-34a

F. Applicable Documents ..... JA1-37

2. Acoustic Testing.....JA1-52
A. General.....JA1-52
B. Description.....JA1-52
1. Deployable Noise Measurement System (DNM).....JA1-52
2. - - - - - - *deleted* - - - - -
3. Portable Sonobuoy Measurement System (PSMS). .....JA1-53
4. Portable Measurement System (PMS).....JA1-54
5. General.....JA1-54
C. Contractor Responsibilities.....JA1-55
D. Workload Factors.....JA1-59
1. Deployable Noise Measurement System (DNM).....JA1-59
2. - - - - - - *deleted* - - - - - -
3. Portable Sonobuoy Measurement System (PSMS) and Portable Measurement System (PMS).....JA1-60
4. Post-Test Data Processing .....JA1-61
5. Other.....JA1-61
E. Key Personnel/Personnel Qualifications .....JA1-61
F. Applicable Documents .....JA1-63

3. AUTEC FORACS Range/Sensor Accuracy Testing.....JA1-74
A. General.....JA1-74
B. Description.....JA1-74
C. Contractor Responsibilities.....JA1-79
D. Workload Factors.....JA1-84
E. Key Personnel/Personnel Qualifications .....JA1-86
F. Applicable Documents .....JA1-88

III. Special Test Systems .....JA1-95
1. Reserved for Future Use .....JA1-95

2. AUTEC Minefield (s).....JA1-102
A. General.....JA1-102
B. Description.....JA1-102

C. Contractor Responsibilities ..... JA1-102
D. Workload Factors ..... JA1-103
E. Key Personnel/Personnel Qualifications ..... JA1-103
F. Applicable Documents ..... JA1-103

3. Portable Tracking System ..... JA1-105a
A. General ..... JA1-105a
B. Description ..... JA1-105a
C. Contractor Responsibilities ..... JA1-105f
D. Workload Factors ..... JA1-105k
E. Key Personnel/Personnel Qualifications ..... JA1-105n
F. Applicable Documents ..... JA1-105o

IV. Test Operations and Customer Support ..... JA1-106
1. Test Operations Planning and Range Operations Control ..... JA1-106
A. General ..... JA1-106
B. Description ..... JA1-106
C. Contractor Responsibilities ..... JA1-110
D. Workload Factors ..... JA1-116
E. Key Personnel/Personnel Qualifications ..... JA1-122
F. Applicable Documents ..... JA1-124

2. Customer/Visitor Support ..... JA1-129
A. General ..... JA1-129
B. Description ..... JA1-129
C. Contractor Responsibilities ..... JA1-129
D. Workload Factors ..... JA1-131
E. Key Personnel/Personnel Qualifications ..... JA1-132
F. Applicable Documents ..... JA1-132

V. Range Data Processing JA1-134
A. General ..... JA1-134
B. Description ..... JA1-134
C. Contractor Responsibilities ..... JA1-134
D. Workload Factors ..... JA1-137
E. Key Personnel/Personnel Qualifications ..... JA1-137
F. Applicable Documents ..... JA1-138

VI. Information Technology ..... JA1-140
1. Software ..... JA1-140
A. General ..... JA1-140
B. Description ..... JA1-140

C. Contractor Responsibilities ..... JA1-140

D. Workload Factors ..... JA1-144
E. Key Personnel/Personnel Qualifications ..... JA1-145
F. Applicable Documents ..... JA1-146

2. Hardware ..... JA1-169
A. General ..... JA1-169
B. Description ..... JA1-169
C. Contractor Responsibilities ..... JA1-169

D. Workload Factors ..... JA1-173
E. Key Personnel/Personnel Qualifications ..... JA1-174
F. Applicable Documents ..... JA1-174

3. Networks ..... JA1-189
A. General ..... JA1-189
B. Description ..... JA1-189
C. Contractor Responsibilities ..... JA1-190
D. Workload Factors ..... JA1-194
E. Key Personnel/Personnel Qualifications ..... JA1-195
F. Applicable Documents ..... JA1-196

VII. Range Data Acquisition Support Systems ..... JA1-203
1. Communications ..... JA1-203
A. General ..... JA1-203
B. Description ..... JA1-203
C. Contractor Responsibilities ..... JA1-205
D. Workload Factors ..... JA1-211
E. Key Personnel/Personnel Qualifications ..... JA1-212
F. Applicable Documents ..... JA1-213

2. Timing System ..... JA1-224
A. General ..... JA1-224
B. Description ..... JA1-224
C. Contractor Responsibilities ..... JA1-226
D. Workload Factors ..... JA1-229
E. Key Personnel/Personnel Qualifications ..... JA1-229
F. Applicable Documents ..... JA1-230

VIII. MK-30 Target and Battery Support ..... JA1-233
A. General ..... JA1-233
B. Description ..... JA1-233
C. Contractor Responsibilities ..... JA1-234
D. Workload Factors ..... JA1-239
E. Key Personnel/Personnel Qualifications ..... JA1-239a
F. Applicable Documents ..... JA1-240

IX. Ordnance Support ..... JA1-249
1. Exercise Weapons and Ordnance: Preparation/Storage/
Handling/Post-Run Services ..... JA1-249
A. General ..... JA1-249
B. Description ..... JA1-249

C. Contractor Responsibilities..... JA1-250
D. Workload Factors ..... JA1-254

E. Key Personnel/Personnel Qualifications ..... JA1-255
F. Applicable Documents ..... JA1-255

2. Launch and Recovery Services ..... JA1-259
A. General ..... JA1-259
B. Description ..... JA1-259
C. Contractor Responsibilities ..... JA1-260
D. Workload Factors ..... JA1-264
E. Key Personnel/Personnel Qualifications ..... JA1-265
F. Applicable Documents ..... JA1-266

X. Reserved for Future Use ..... JA1-270

XI. Reserved for Future Use ..... JA1-271

XII. Acoustic Tracking Equipment (ATE) and
Test Electronics Support (ES) Equipment ..... JA1-272
A. General ..... JA1-272
B. Description ..... JA1-272
C. Contractor Responsibilities ..... JA1-277
D. Workload Factors ..... JA1-283
E. Key Personnel/Personnel Qualifications ..... JA1-285a
F. Applicable Documents ..... JA1-286

XIII. Technical Services ..... JA1-300
1. Metrology, Calibration, and Weight Testing ..... JA1-300
A. General ..... JA1-300
B. Description ..... JA1-300
C. Contractor Responsibilities ..... JA1-301
D. Workload Factors ..... JA1-304
E. Key Personnel/Personnel Qualifications ..... JA1-305
F. Applicable Documents ..... JA1-306

2. Machine Shop and Welding Services ..... JA1-319
A. General ..... JA1-319
B. Description ..... JA1-319
C. Contractor Responsibilities ..... JA1-320
D. Workload Factors ..... JA1-321
E. Key Personnel/Personnel Qualifications ..... JA1-321
F. Applicable Documents ..... JA1-322

3. Diving ..... JA1-326
A. General ..... JA1-326

B. Description.....JA1-326
C. Contractor Responsibilities.....JA1-326

D. Workload Factors ..... JA1-328
E. Key Personnel/Personnel Qualifications ..... JA1-328a
F. Applicable Documents ..... JA1-329

XIV. Reserved for Future Use ..... JA1-331

XV. Support Services ..... JA1-332
1. Audiovisual Support ..... JA1-332
A. General ..... JA1-332
B. Description ..... JA1-332
C. Contractor Responsibilities ..... JA1-333
D. Workload Factors ..... JA1-335
E. Key Personnel/Personnel Qualification ..... JA1-336
F. Applicable Documents ..... JA1-336

2. Administrative Support ..... JA1-341
A. General ..... JA1-341
B. Description ..... JA1-341
C. Contractor Responsibilities ..... JA1-341
D. Workload Factors ..... JA1-343a
E. Key Personnel/Personnel Qualification ..... JA1-344
F. Applicable Documents ..... JA1-344a

3. Orientation and Technical Training ..... JA1-345
A. General ..... JA1-345
B. Description ..... JA1-345
C. Contractor Responsibilities ..... JA1-345
D. Workload Factors ..... JA1-349
E. Key Personnel/Personnel Qualifications ..... JA1-349
F. Applicable Documents ..... JA1-350

4. AUTEC Project Documents Support ..... JA1-355
A. General ..... JA1-355
B. Description ..... JA1-355
1. Internal Documents/Programs ..... JA1-355
2. Reference Documents ..... JA1-357
C. Contractor Responsibilities ..... JA1-358
D. Workload Factors ..... JA1-362
E. Key Personnel/Personnel Qualifications ..... JA1-363
F. Applicable Documents ..... JA1-363

XVI. Systems Engineering and Analysis ..... JA1-380
A. General ..... JA1-380

B. Description..... JA1-380
C. Contractor Responsibilities..... JA1-380

D. Workload Factors ..... JA1-383
E. Key Personnel/Personnel Qualifications ..... JA1-384
F. Applicable Documents ..... JA1-385

XVII. Quality Management ..... JA1-391
A. General ..... JA1-391
B. Description ..... JA1-391
C. Contractor Responsibilities ..... JA1-392
D. Workload Factors ..... JA1-395
E. Key Personnel/Personnel Qualifications ..... JA1-395
F. Applicable Documents ..... JA1-395a

XVIII. Marine Support ..... JA1-396
A. General ..... JA1-396
B. Description ..... JA1-396
C. Contractor Responsibilities ..... JA1-397
D. Workload Factors ..... JA1-409
E. Key Personnel/Personnel Qualifications ..... JA1-411
F. Applicable Documents ..... JA1-415a

XIX. Air Operations JA1-427
1. Fixed-Wing Aircraft ..... JA1-427
A. General ..... JA1-427
B. Description ..... JA1-427
C. Contractor Responsibilities ..... JA1-428
D. Workload Factors ..... JA1-434
E. Key Personnel/Personnel Qualifications ..... JA1-435
F. Applicable Documents ..... JA1-436

2. Helicopters ..... JA1-440
A. General ..... JA1-440
B. Description ..... JA1-440
C. Contractor Responsibilities ..... JA1-441
D. Workload Factors ..... JA1-448
E. Key Personnel/Personnel Qualification ..... JA1-448
F. Applicable Documents ..... JA1-449

XX. Public Works ..... JA1-451
1. Maintenance and Repair ..... JA1-451
A. General ..... JA1-451
B. Description ..... JA1-451
C. Contractor Responsibilities ..... JA1-452
D. Workload Factors ..... JA1-455

E. Key Personnel/Personnel Qualification ..... JA1-456
F. Applicable Documents ..... JA1-456

2. Utilities Operation ..... JA1-482
A. General ..... JA1-482
B. Description ..... JA1-482
C. Contractor Responsibilities ..... JA1-483
D. Workload Factors ..... JA1-486a
E. Key Personnel/Personnel Qualification ..... JA1-487
F. Applicable Documents ..... JA1-487

3. Transportation ..... JA1-490
A. General ..... JA1-490
B. Description ..... JA1-490
C. Contractor Responsibilities ..... JA1-490
D. Workload Factors ..... JA1-496
E. Key Personnel/Personnel Qualification ..... JA1-496
F. Applicable Documents ..... JA1-496

4. Engineering (Civil/Facilities) ..... JA1-513
A. General ..... JA1-513
B. Description ..... JA1-513
C. Contractor Responsibilities ..... JA1-513
D. Workload Factors ..... JA1-517
E. Key Personnel/Personnel Qualifications ..... JA1-518
F. Applicable Documents ..... JA1-519

5. Minor Construction ..... JA1-521
A. General ..... JA1-521
B. Description ..... JA1-521
C. Contractor Responsibilities ..... JA1-521
D. Workload Factors ..... JA1-522
E. Key Personnel/Personnel Qualification ..... JA1-523
F. Applicable Documents ..... JA1-523

XXI. Logistics ..... JA1-524
1. Supply, Inventory, and Property Control ..... JA1-524
A. General ..... JA1-524
B. Description ..... JA1-524
C. Contractor Responsibilities ..... JA1-525
D. Workload Factors ..... JA1-532
E. Key Personnel/Personnel Qualifications ..... JA1-533
F. Applicable Documents ..... JA1-534

2. Housing ..... JA1-538
A. General ..... JA1-538

B. Description ..... JA1-538
C. Contractor Responsibilities ..... JA1-538

D. Workload Factors ..... JA1-541
E. Key Personnel/Personnel Qualifications ..... JA1-542
F. Applicable Documents ..... JA1-542

3. Laundry ..... JA1-545
A. General ..... JA1-545
B. Description ..... JA1-545
C. Contractor Responsibilities ..... JA1-545
D. Workload Factors ..... JA1-546
E. Key Personnel/Personnel Qualification ..... JA1-546
F. Applicable Documents ..... JA1-546

4. Food Service ..... JA1-547
A. General ..... JA1-547
B. Description ..... JA1-547
C. Contractor Responsibilities ..... JA1-548
D. Workload Factors ..... JA1-549
E. Key Personnel/Personnel Qualifications ..... JA1-549
F. Applicable Documents ..... JA1-550

5. Medical/Dental ..... JA1-551
A. General ..... JA1-551
B. Description ..... JA1-551
C. Contractor Responsibilities ..... JA1-551
D. Workload Factors ..... JA1-554
E. Key Personnel/Personnel Qualification ..... JA1-554
F. Applicable Documents ..... JA1-554

XXII. Safety and Environmental Quality ..... JA1-557
1. Occupational Safety ..... JA1-557
A. General ..... JA1-557
B. Description ..... JA1-557
C. Contractor Responsibilities ..... JA1-558
D. Workload Factors ..... JA1-565
E. Key Personnel/Personnel Qualifications ..... JA1-565
F. Applicable Documents ..... JA1-566

2. Environmental Quality Protection ..... JA1-569
A. General ..... JA1-569
B. Description ..... JA1-569
C. Contractor Responsibilities ..... JA1-570
D. Workload Factors ..... JA1-577a

E. Key Personnel/Personnel Qualifications ..... JA1-578
F. Applicable Documents ..... JA1-578

XXIII. Security ..... JA1-582
A. General ..... JA1-582
B. Description ..... JA1-582
C. Contractor Responsibilities ..... JA1-583
D. Workload Factors ..... JA1-589
E. Key Personnel/Personnel Qualifications ..... JA1-591
F. Applicable Documents ..... JA1-591

XXIV. Fire Protection JA1-599
A. General ..... JA1-599
B. Description ..... JA1-599
C. Contractor Responsibilities ..... JA1-599
D. Workload Factors ..... JA1-607
E. Key Personnel/Personnel Qualifications ..... JA1-607
F. Applicable Documents ..... JA1-608

XXV. Reports and Data Files ..... JA1-612
A. General ..... JA1-612
B. Description ..... JA1-612
C. Contractor Responsibilities ..... JA1-612
D. Workload Factors ..... JA1-613
E. Key Personnel/Personnel Qualification ..... JA1-613
F. Applicable Documents ..... JA1-613

XXVI. Dependent Education ..... JA1-624
A. General ..... JA1-624
B. Description ..... JA1-624
C. Contractor Responsibilities ..... JA1-625
D. Workload Factors ..... JA1-626
E. Key Personnel/Personnel Qualifications ..... JA1-626
F. Applicable Documents ..... JA1-626

XXVII. Welfare and Recreation ..... JA1-627
A. General ..... JA1-627
B. Description ..... JA1-627
C. Contractor Responsibilities ..... JA1-627
D. Workload Factors ..... JA1-629
E. Key Personnel/Personnel Qualification ..... JA1-630
F. Applicable Documents ..... JA1-630

ATTACHMENT (1)

**LIST OF FIGURES**

I-1 NUWC Division Newport/Detachment AUTEC Locations ..... JA1-11
I-2 AUTEC Facilities - Andros Island ..... JA1-12
I-3 Site 1 ..... JA1-13
I-4 Site 2 ..... JA1-14
I-5 Site 3 ..... JA1-15
I-6 Site 4 ..... JA1-16
I-7 NUWC Division Newport/AUTEC Project Organization ..... JA1-17
I-8 Business Area Team Structure ..... JA1-17a

II-1 ..... AUTEC In-Water Hydrophone Arrays ..... JA1-40
II-2a Real Time In-Water Tracking Systems ..... JA1-41
II-2b Underwater Communications System Block Diagram ..... JA1-41a
II-2c Legacy Weapons Range In-Water System ..... JA1-41b
II-3 ..... Radar Tracking System JA1-42
II-4 ..... HITS Block Diagram JA1-43
II-5 ..... Fixed LATR Ground Systems. JA1-43a
II-6 ..... HITS Area of Coverage JA1-44
II-7 ..... DNM System Block Diagram JA1-64
II-8 ..... Reserved for Future Use
II-9 ..... Portable Sonobuoy Measurement System ..... JA1-66
II-10 Portable Measurement System ..... JA1-67
II-11 AUTEC FORACS Range System ..... JA1-90

III-1 ..... Reserved for Future Use
III-2 ..... AUTEC Minefield JA1-104
III-3 ..... PTS Overview
III-4 ..... In-Water Subsystem In-Line Array. ..... JA1-105r
III-5 ..... Buoyed Acoustic RF Telemetry System (BARTS) ..... JA1-105s

III-6
Deployment/Recovery Subsystem PROC and Minivan ..... JA1-105t
III-7 ..... Automated
Data Processing Subsystem..... JA1-105u
III-8 ..... PTS/LATR
Equipment Rack. JA1-105v

IV-1 AUTEC Real Time Display Centers 1 and 2..... JA1-126
IV-2 Weapons Range Surveillance/Weather Radar System..... JA1-127

V-1 ..... ARGOS Data
Distribution System (DDS)..... JA1-139

VI-1 NUWC/AUTEC Classified Networking Relationship..... JA1-197
VI-2 NUWC/AUTEC Unclassified Networking Relationship ..... JA1-198
VI-3 Site 1 Classified LAN ..... JA1-199
VI-4 Planned Site 1 Unclassified Fiber Optic LAN ..... JA1-200

ATTACHMENT (1)

## LIST OF FIGURES

VII-2 AUTEC Administrative Communication..... JA1-217
VII-3 AUTEC Central and Sub-Central Timing Systems ..... JA1-232

XIII-1 AUTEC Primary Frequency Reference and Measurement Standards Traceability to U.S. Naval Observatory..... JA1-307

ATTACHMENT (1)

**LIST OF TABLES**

I-1 Work Order/Test Number Structure ..... JA1-18
I-2 - - - - - deleted - - - - -

II-1 Weapons Range Equipment ..... JA1-45
II-2 Acoustic Testing Equipment ..... JA1-68
II-3 AUTEC FORACS Range Equipment ..... JA1-91

III-1 Equipment List for AUTEC's Berry Islands Minefield ..... JA1-105
III-2 Portable Tracking System Equipment ..... JA1-105w

IV-1 Test Conductor/Controller Required Reading List ..... JA1-128

VI-1 Contractor-Maintained Real-Time Software ..... JA1-148
VI-2 Contractor-Maintained Pre- and Post-Test Software ..... JA1-151
VI-3 Contractor-Maintained Administrative Data Bases and Software Systems ..... JA1-158
VI-4 Government-Maintained Administrative Data Bases and Software Systems ..... JA1-165
VI-5 Commercial Off-the-Shelf Software ..... JA1-167
VI-6 Classified Information Systems Hardware ..... JA1-175
VI-7 Unclassified Information Systems Hardware ..... JA1-178
VI-8 AUTEC Local Area Network Equipment ..... JA1-201

VII-1 Communications Equipment ..... JA1-218
VII-2 Timing System Equipment ..... JA1-231

VIII-1 Mobile Target Facility Equipment ..... JA1-242

IX-1 Weapon Prep/Post-Run Equipment ..... JA1-258
IX-2 Weapon/Target Launch/Recovery Equipment ..... JA1-269

XII-1 3-D Acoustic Tracking Equipment ..... JA1-287
XII-2 Electronics Test Support Equipment ..... JA1-289
XII-3 Electronics Test Support (ES)/Acoustic Tracking Equipment (ATE) OCDs ..... JA1-295

XIII-1 Capabilities of the AUTEC Standards Laboratory ..... JA1-308
XIII-2 Calibration Laboratory Test Equipment ..... JA1-313
XIII-3 Non-Destructive Test Equipment ..... JA1-318

XIII-4 AUTEC Machine Shop/Welding Equipment ..... JA1-323
XIII-5 AUTEC Ancillary Dive Equipment..... JA1-330

XV-1 AUTEC Audio-Visual Equipment ..... JA1-337
XV-2 AUTEC Training Courses ..... JA1-351
XV-3 Joint Project Procedures ..... JA1-365
XV-4 AUTEC Operating Control Directives ..... JA1-368
XV-5 AUTEC Reference/Policy Documents ..... JA1-378

XVI-1 Systems Engineering Test Equipment ..... JA1-386
XVI-2 Instrumentation Systems Performance Tests ..... JA1-388

XVIII-1 Major AUTEC Vessels ..... JA1-418
XVIII-2 Marine Operations Ancillary Deck Equipment ..... JA1-419
XVIII-3 Marine Operations Maintenance Equipment ..... JA1-420
XVIII-4 Applicable NSTM and ABS Reference Documents ..... JA1-421

XIX-1 Fixed-Wing AUTEC Aircraft Routine Flight Schedule ..... JA1-438
XIX-2 Fixed Wing Aircraft Maintenance and Support Equipment ..... JA1-439
XIX-3 Helicopter Maintenance Support Equipment ..... JA1-450

XX-1 Detailed Inventory of Naval Shore Facilities ..... JA1-458
XX-2 Relocatable Facilities ..... JA1-476
XX-3 Boiler/Pressure Equipment ..... JA1-480
XX-4 Power Generating Equipment ..... JA1-489
XX-5 AUTEC Rolling Stock Inventory . . . ..... JA1-499
XX-6 AUTEC Range User Aviation Ground Support Equipment Inventory ..... JA1-509

XXI-1 Andros Housing Units ..... JA1-543
XXI-2 AUTEC Dispensary Medical Equipment ..... JA1-556

XXIII-1 General Guide to AUTEC Functional/Operational Security Levels ..... JA1-596

XXIV-1 Site 1 Firefighting and Emergency Equipment ..... JA1-611

XXV-1 NUWC-Required Technical and Administrative Reports ..... JA1-614

# GLOSSARY

| | |
|---|---|
| ABS | American Bureau of Shipping |
| A/C | Air Conditioning |
| ACL | Acoustic Command Link (MK-30 Target) |
| ACP | Allied Communications Publication |
| ACQ | Acquisition (Radar) |
| ADCAP | Advanced Capability Torpedo, MK48 |
| ADCP | Acoustic Doppler Current Profiler |
| ADP | Automated/Automatic Data Processing |
| ADPE | Automated Data Processing Equipment |
| ADPS | Automated Data Processing Subsystem |
| AHRP | AUTEC Hydrophone Replacement Program |
| AIMS | Acoustic Interface Measurement System |
| AIREM | Air(craft) Effectiveness Measures |
| AIRS | AUTEC Instrumentation Radar System |
| AIS | Annual Inspection Summary |
| AIS | Automated Information System(s) |
| AM | Amplitude Modulation |
| AMC | Air Mobility Command |
| AMP | Amplifier |
| AMS | AUTEC Maintenance System |
| ANSI | American National Standards Institute |
| AOIS | AUTEC Operational Intercom System |
| APL/UW | Applied Physics Laboratory, University of Washington |
| APP | AUTEC Project Procedure(s) |
| APTS | Automatic Position Tracking System |
| ARA | AUTEC Recreation Association |
| ARGOS | AUTEC Real-time Graphic On-line System |
| ASA | American Standards Association |
| ASCII | American Standard Code for Information Interchange |
| ASD | Andros Island |
| ASSY | Assembly |
| ASTM | American Society for Testing Materials |
| ASTEP | Advanced Shipboard Tracking Electronics, Portable |
| ASTS | AUTEC Sub-Central Timing System(s) |
| ASUW | Anti-Surface Unit Warfare |
| ASW | Anti-Submarine Warfare |
| ATE | Acoustic Tracking Equipment |
| ATM | Asynchronous Transfer Mode |
| ATS | Acoustic Test Set |
| ATS | AUTEC Timing System |
| AUDIX | Automated Digital Information Exchange |

| | |
|---|---|
| AUTEC | Atlantic Undersea Test and Evaluation Center |
| AUTODIN | Automatic Digital Network |

| | |
|---|---|
| AWS | American Welding Society |
| AWTT | Above Water Torpedo Tube |
| BARTS | Bouyed Acoustic RF Telemetry System |
| BATELCO | Bahamas Telecommunication Corporation, Nassau |

# GLOSSARY

| | |
|---|---|
| BMAR | Backlog of Maintenance and Repair |
| BS | Bachelor of Science (Degree) |
| CAD | Cartridge Activated Device |
| CAD | Computer Aided Design |
| CAIMS | Conventional Ammunition Integrated Management System |
| CAL | Calibrate/Calibration |
| CASREP | Casualty Report (message) |
| CCAFS | Cape Canaveral Air Force Station (FL) |
| CCB | Command Control Building |
| CDRL | Contract Data Requirements List |
| CFR | Code of Federal Regulations |
| CIN | (U.S. Navy Training) Course Identification Number |
| CHSWLINST | Commander, Helicopter Anti-Submarine Wing, U.S. Atlantic Fleet Instruction |
| CINCLANTFLT | Commander in Chief, U.S. Atlantic Fleet |
| CLINS | Contract Line Item Number(s) |
| CMS | Communications Security Material System |
| CNO | Chief of Naval Operations |
| COMEX | Commencement of Exercise |
| COMM | Communications |
| COMNAVSEASYSCOM | Commander, Naval Sea Systems Command |
| COMNAVSURFLANT | Commander, Naval Surface Force, U.S. Atlantic Fleet |
| COMSEC | Communications Security |
| COMSUBLANT | Commander, Submarine Force, U.S. Atlantic Fleet |
| COMSUBPACINST | Commander, Submarine Force, U.S. Pacific Fleet Instruction |
| CONUS | Continental United States |
| COTS | Commercial Off-The-Shelf |
| CPR | Cardiopulmonary Resuscitation |
| CSMA/CD | Carrier Sense Multiple Access with Collision Detection (relates to computer networking) |
| CSS | Central Security Service |
| CSSQT | Combat System Ship Qualification Trial(s) |
| CTD | Conductivity, Temperature, Depth |
| CW | Continuous Wave |
| DECnet | Digital Equipment Corp. Network (protocol) |
| DD 1149 | (Requisition and Invoice/Shipping Form) |
| DDN | Defense Data Network |

| | |
|---|---|
| DDS | Data Distribution System |
| | - - - - - *deleted* - - - - - |
| DFARS | Department of Defense Federal Acquisition Regulation (Supplement) |
| DGPS | Differential Global Positioning System |

## GLOSSARY

| | |
|---|---|
| DGSS | Data Gathering System Synchronizer(s) |
| DLV | Dummy Launch Vehicle |
| DNM | Deployable Noise Measurement (System) |
| DOD | Department of Defense |
| DODD | Department of Defense Directive |
| DON | Department of (the) Navy |
| DOT | Department of Transportation |
| DPSK | Differential Phase Shift Keyed |
| DRMO | |
| DSN | Defense Switched Network |
| DSP | Digital Signal Processor |
| EA | Environmental Assessment |
| ECM | Electronic Counter Measures |
| ECP | Engineering Change Proposal |
| EDU | Error Detection Unit (Timing System) |
| EFC | Engineering Field Change |
| EHCTV | Encapsulated Harpoon Certification Test Vehicle |
| EIS | Environmental Impact Statement |
| EIA/TIA | Electronics Industry Assoc./Telecommunications Industry Assoc. |
| EKMS | Electronic Key Management System |
| EMATT | Expendable Mobile Acoustic Training Target MK-39 |
| EMD | (General Motors) Electro-Motive Division |
| EMR | Electro-Magnetic Radiation |
| EPA | (US) Environmental Protection Agency |
| EPIRB | Emergency Position Indicator Radio Beacon |
| ER | Environmental Review |
| ES | Electronic (Test) Support |
| ESD | Electro-Static Discharge |
| ESM | Electronic Support Measures |
| ESMTS | Electronic Support Measures Test System |
| ETHERNET | Bus-oriented technology used to connect computers/peripherals using CSMA/CD methodology |
| EXE | Executable (Software Code) |
| FAA | Federal Aviation Administration |
| FAR | Federal Acquisition Regulation(s) |
| FAR | Federal Aviation Regulation(s) |
| FAX | Facsimile |
| FDDI | Fibre Distributed Data Interface |
| FIR | Functional Item Replacement |
| FM | Frequency Modulation |
| FO | Fiber Optic |

- - - - - *deleted* - - - - -

| | |
|---|---|
| FONSI | Finding of No Significant Impact |
| FOT&E | Follow-on Test and Evaluation |
| FORACS | Fleet Operational Readiness Accuracy Check Site |
| EPROM | Erasable Programmable Read-Only Memory |
| FSW | Feet, Salt Water |
| FTS | Federal Telecommunications System |
| FY | Fiscal Year (Government) (1 Oct.- 30 Sept.) |

# GLOSSARY

| | |
|---|---|
| G&A | General and Administrative |
| GFE | Government Furnished Equipment |
| GIDEP | Government-Industry Data Exchange Program |
| GIS | Ground Interrogation Station |
| GM | General Motors |
| GOTS | Government Off-The-Shelf |
| GSA | General Services Administration |
| GSE | Ground Support Equipment (for aircraft) |
| GPM | Gallons Per Minute |
| GPS | Global Positioning System |
| GUI | Graphic User Interface |
| HAZCOM | Hazardous Substance Communications |
| HAZMAT | Hazardous Material |
| HAZWASTE | Hazardous Waste |
| HDBK | Handbook |
| HF | High Frequency |
| HHG | Household Goods |
| HITS | Hyperbolic In-Air Tracking System |
| HHCM | |
| HP | Hewlett Packard |
| HP | Horse Power |
| ICS | Internal Communications System (helicopter) |
| IDATS | Integrated Data Acquisition Test System |
| IEEE | Institute of Electrical and Electronic Engineers |
| IEEE 802.3 | A standard for Local Area Networks |
| IFR | Instrument Flight Rules |
| I&M | Improvement and Modernization |
| IMA | Intermediate Maintenance Activity |
| INP | Input |
| IOC | Initial Operating Capability |
| IOP | Input/Output Processor |
| IPE | Industrial Plant Equipment |
| IPT | Integrated Process Team |
| IRIG | Inter-Range Instrumentation Group |
| IS | Information System(s) |
| ISO | International Standards Organization |
| ISEA | In-Service Engineering Agent |
| IT | Information Technology |
| LAN | Local Area Network(s) |
| LATR | Large Area Tracking Range |
| LCE | Linear Cable Engine |

| | |
|---|---|
| LCSTGP | Limited Capability Shipboard Tracking Electronics, Portable (Modified for PTS) |
| LD | Letter of Direction |
| LDP | LRWS Display Processor |
| LF | Low Frequency |
| LOFAR | Low Frequency Analysis and Recording |
| LORAN | Long Range Aid to Navigation |
| | - - - - - *deleted* - - - - - |
| LSD | Large Screen Display(s) |
| MARPOL | International Maritime Convention for the Prevention of Pollution from Ships |
| MARS | Mobile Acoustic Response System |
| MESA | Multiplexed Extended Sensor Array |
| MHE | Material(s) Handling Equipment |
| MIG | Metal, Inert Gas (welding) |

## GLOSSARY

| | |
|---|---|
| MILCON | Military Construction |
| MIL-HDBK | Military Handbook |
| MILNET | Military (wide area) Network |
| MILSTRIP | DD Form #1348 (Supply Requisition - Standard Stock Items) |
| MIS | Management Information System |
| MMM | Maintenance and Material Management (U.S. Navy) (3-M) |
| M&O | Maintenance and Operation |
| MODPROP | Modification Proposal |
| MONOB | Mobile Noise Barge (Operated by the David Taylor Naval Ships Research and Development Center) |
| MS | Master of Science (Degree) |
| MSC | Master System Controller |
| MSC | Military Sealift Command |
| M/V | Motor Vessel |
| NAPS | Navy Acquisition Procedures Supplement |
| NAS | Naval Air Station |
| | - - - - - *deleted* - - - - - |
| NASA | National Aeronautics and Space Administration |
| NATO | North Atlantic Treaty Organization |
| NAVAIR | Naval Air Systems Command |
| NAVFAC | Naval Facilities Engineering Command |
| NAVMEDCOM | Naval Medical Command |
| NAVOSH | Navy Occupational Safety and Health Program |
| NAVPTO | Navy Passenger Transportation Office |
| NAVSHIPS | U.S. Navy Bureau of Ships - Predecessor to NAVSEA |
| NAVSEA | Navy Sea Systems Command |
| NAVSUP | Naval Supply Systems Command |
| NAVTELCOMINST | Naval Telecommunications Command Instruction |
| NAWCTSD | Naval Air Warfare Center Training Systems Division |
| NCCOSC | Naval Command, Control and Ocean Surveillance Center |
| NCF | Naval Construction Force(s) |
| NCTAMSLANT | Naval Computer Telecommunications Area Master Station, US Atlantic Fleet |
| NDB | Non-Directional Beacon |
| NDI | Non-Destructive Inspection |

- - - - - *deleted* - - - - -

| | |
|---|---|
| NEPA | National Environmental Policy Act |
| NetBIOS | Network Basic Input Output System |

## GLOSSARY

| | |
|---|---|
| NFA | NATO FORACS AUTEC |
| NFPA | National Fire Protection Association |
| NIMA | National Imagery and Mapping Agency |
| NIOSH | |
| NIU | Network Interface Unit |
| NMI | Nautical Mile (6076 feet) |
| NOTAM | Notice to Airmen (message) |
| NOTU | Naval Ordnance Test Unit |
| NSA | National Security Agency |
| NSTM | Nav. Ships Technical Manual (See also BSTM) |
| NTADS | Navy Tracking and Display System |
| NUWC | Naval Undersea Warfare Center (Division Newport) or (Detachment AUTEC) |
| OAT | Operational Acceptance Test |
| OCC | Operations Control Center (Site 1) |
| OCD | Operating Control Directive |
| OCD/SOP | Operating Control Directive/Standard Operating Procedure |
| OCEF | Ocean Construction Equipment Facility, St. Julians Creek, VA |
| OD | Operations Directive |
| OHE | Ordnance Handling Equipment |
| OIC | Officer-in-Charge |
| OMB | Operations Management Board |
| OMI | Operating and Maintenance Instruction |
| OP | Ordnance Publication |
| OP AREA | Operational Area |
| OPLAN | Operations Plan |
| OPORD | Operations Order |
| OPNAV | Office of the Chief of Naval Operations |
| OPNAVINST | Office of the Chief of Naval Operations Instruction |
| OSI | Open Systems Interconnectivity |
| OSH | Occupational Safety and Health |
| OSHA | Occupational Safety and Health Act |
| OSHA | Occupational Safety and Health Administration |
| PA | Public Address (system) |
| PARGOS | Portable AUTEC Graphic On-Line System |
| PAT | Process Action Team (TQL) |
| PBAX | Private Branch Automatic Exchange |

| | |
|---|---|
| PC | Personal Computer |
| PCARGOS | Personal Computer ARGOS |
| PCO | Procuring Contracting Officer |
| PCO | Prospective Commanding Officer |

- - - - - *deleted* - - - - -

GLOSSARY

| | |
|---|---|
| PDS | (Tracking) Pinger Database System |
| PITT | Portable Instrument Tracking Transducer |
| PIP | Participant Instrumentation Package |
| PLV | Presettable Launch Vehicle |
| PM | Preventative Maintenance |
| PMEL | Precision Measurement Equipment Laboratory |
| PMS | Planned Maintenance System |
| PMS | Portable (Acoustic) Measurement System |
| PMT | Process Management Team |
| POL | Petroleum, Oil, Lubricants |
| PPC | Pulse Position Code |
| PPE | Personal Protective Equipment |
| PQMI | Process Quality Management and Improvement |
| PROC | Portable Range Operations Center |
| PSA | Personnel Support Activity |
| PSMS | Portable Sonobuoy Measurement System |
| PTS | Portable Tracking System |
| PUTT | Portable Underwater Tracking Transducer |
| QA | Quality Assurance |
| QC | Quality Control |
| QM | Quality Management |
| RAC | Risk Assessment Code (Safety) |
| RAM | Random Access Memory |
| RDF | Radio Direction Finding or Finder |
| RDFTS | Radio Direction Finder Test Set |
| RDL | Remote Data Link |
| RDT&E | Research, Development, Test and Evaluation |
| RECAP | Recoverable Capsule (Dummy, launchable TOMAHAWK missile capsule) |
| REXTORP | Recoverable Exercise Torpedo |
| RF | Radio Frequency |
| RFP | Request for Proposal |
| RMI | Range Maintenance Interval |
| RMP | Range Management Plan |
| ROICC | Resident Officer in Charge of Construction (NMCB) |
| ROV | Remotely Operated Vehicle |
| RRC | Repair Report Cards |
| RSS | Range Support Shop (Compound) |
| RTCM | Radio Technical Commission for Marine Services |
| RTDC | Real Time Display Center |
| RTR | Receiver Transmitter |
| SAL | Swimout AUTEC Launcher |
| SAT | Sensor Accuracy Test |
| SATCOM | Satellite Communication (system) |
| SATNAV | Satellite Navigation |

| | |
|---|---|
| SATO | Scheduled Airline Ticket Office |
| SATS | Sonar Acoustic Target Source |

- - - - - *deleted* - - - - -

| | |
|---|---|
| SCUBA | Self-Contained Underwater Breathing Apparatus |
| SDS | Signal Distribution System |
| SE&A | Systems Engineering and Analysis |

## GLOSSARY

| | |
|---|---|
| SEABEES | Military Members of the Naval Construction Force(s) |
| SGI | Silicon Graphic, Inc. |
| SINS | Ships Internal Navigation System |
| SITREP | Situation Report |
| SONAR | Sound Navigation and Ranging |
| SLMMs | Submarine Launched Mobile Mines |
| SPCC | Ships Parts Control Center |
| SSB | Single Side Band (radio) |
| SSE | Special Support Equipment (MK-30 Target Program) |
| SSTR | Solid State Track Radar |
| STEP | Shipboard Tracking Electronics, Portable |
| STI | Special Test Instructions |
| STS | Sonar Target System |
| STS | Sonar Test Set |
| STS | Sonobuoy Tracking System |
| TAC | Tactical Advanced Computer |
| TACAN | Tactical Aviation and Navigation (System) |
| TCG | Time Code Generator |
| TCP | Training and Certification Program |
| TCP/IP | |
| TDA | Technical Direction Agent |
| TDU | Timing Distribution Unit |
| TDY | Temporary Duty |
| T&E | Test and Evaluation |
| TIG | Tungsten Inert Gas (welding) |
| TM | Technical Manual |
| TMDE | Test, Measuring, and Diagnostic Equipment |
| T-0 | Time Zero |
| TORPEX | Torpedo Exercise |
| TOTEM | TOMAHAWK Test Missile |
| TOTO | Tongue of the Ocean |
| TPA | Towed Pinger Assembly |
| TSEC | Telecommunications Security |
| TSPI | Time/Space/Position Information (or Indicator) |
| TTI | Torpedo Tube Instrumentation (System) |
| TTL | Transistor-to-Transistor Logic |
| TTLS | Telescoping Target Launcher System |
| TTY | Teletype Equipment |
| TQL | Total Quality Leadership |
| TWT | Traveling Wave Tube |

| | |
|---|---|
| UHF | Ultra High Frequency |
| UK | United Kingdom of Ireland and Great Britain |

| | |
|---|---|
| UPS | Uninterruptable Power Supply |
| UQC | Underwater Communication/Telephone Device |
| USCG | United States Coast Guard |
| USN | United States Navy |

## GLOSSARY

| | |
|---|---|
| UST | Underground Storage Tank |
| USW | Undersea Warfare |
| UTC | Universal Time, Coordinated |
| UUV | Unmanned Underwater Vehicles |
| VCAT | VME Clock and Timing |
| VCR | Video Cassette Recorder |
| VDC | Volts, Direct Current |
| VFR | Visual Flight Rules |
| VHF | Very High Frequency |
| VHS | Video Type Format |
| VIP | Very Important Person |
| VME | Versa Module Eurocard |
| VTC | Video Teleconferencing Center |
| WAN | Wide Area Network(s) |
| WATS | Wide Area Telephone Service |
| WATT | WSAT Acoustic Target Transponder |
| WHE | Weight Handling Equipment |
| WO | Work Order |
| WSAT | Weapon System Accuracy Trial(s) |
| WPB | West Palm Beach, FL |
| WQC | Underwater Communications/Telephone Device |
| | - - - - - *deleted* - - - - - |
| XBT | Expendable Bathythermograph |
| XNS | Xerox Network System (protocol) |
| X,Y,Z | Object position within the tracking range grid system |