US006415729B1

(12) **United States Patent**
Nedderman, Jr. et al.

(10) **Patent No.: US 6,415,729 B1**
(45) **Date of Patent: Jul. 9, 2002**

(54) **SIDE PLATE RUDDER SYSTEM**

(75) Inventors: **William H. Nedderman, Jr.**, Middletown; **James L. Dick**, North Kingstown; **Charles H. Beauchamp**, Jamestown, all of RI (US)

(73) Assignee: **The United States of America as represented by the Secretary of the Navy**, Washington, DC (US)

(*) Notice: Subject to any disclaimer, the term of this patent is extended or adjusted under 35 U.S.C. 154(b) by 0 days.

(21) Appl. No.: **09/740,756**

(22) Filed: **Dec. 14, 2000**

(51) **Int. Cl.**[7] **B63H 25/06**

(52) **U.S. Cl.** ..... **114/162**; 114/144 R; 114/164; 440/40

(58) **Field of Search** ..... 440/40, 43, 42; 114/146, 162, 164, 144 R, 145 R, 170, 151

(56) **References Cited**

U.S. PATENT DOCUMENTS

340,237	A	*	4/1886	Nagel et al.	60/222
836,543	A	*	11/1906	Taylor	114/145 R
2,483,675	A	*	10/1949	Sheldon	114/166
2,812,738	A	*	11/1957	Munro	440/68
3,182,623	A	*	5/1965	Lehmann	114/332
3,185,125	A	*	5/1965	Haman	440/27
3,585,957	A	*	6/1971	Rich	114/140
3,670,685	A	*	6/1972	Milessa	114/162
3,791,334	A	*	2/1974	Wetzel	114/35
3,818,959	A	*	6/1974	Larsh	114/126
3,924,557	A	*	12/1975	Bloch	440/75
3,982,493	A	*	9/1976	Cronin	114/144 R
4,444,145	A	*	4/1984	Kohl	114/163
4,548,149	A	*	10/1985	Del Roso	114/162
4,556,005	A	*	12/1985	Jackson	114/146
5,186,420	A	*	2/1993	Beauchamp et al.	244/219
5,235,926	A	*	8/1993	Jones	114/126
5,813,357	A	*	9/1998	Watson	114/145 R

FOREIGN PATENT DOCUMENTS

DE	3619998	*	12/1987	114/162
FR	2436073	*	5/1980	114/162
FR	2520698	*	8/1983	114/162
FR	2692546	*	12/1993	114/162
GB	2030097	*	4/1980	114/162
JP	55-094894	*	7/1980	440/42
SU	874477	*	10/1981	114/162

* cited by examiner

Primary Examiner—S. Joseph Morano
Assistant Examiner—Ajay Vasudeva
(74) *Attorney, Agent, or Firm*—Michael J. McGowan; James M. Kasischke; Prithvi C. Lall

(57) **ABSTRACT**

The present invention relates to an improved steering system for a water craft and an improved method of steering. The steering system includes at least two variable camber plates or rudders mounted to a hull of the water craft for imparting a steering force to the water craft. Each of the variable camber plates is preferably formed from a flexible material and has a leading edge affixed to the hull. A linkage mechanism is attached to a steering device on the water craft and causes at least one of the plates to move relative to the hull and thereby vary the camber of the at least one plate.
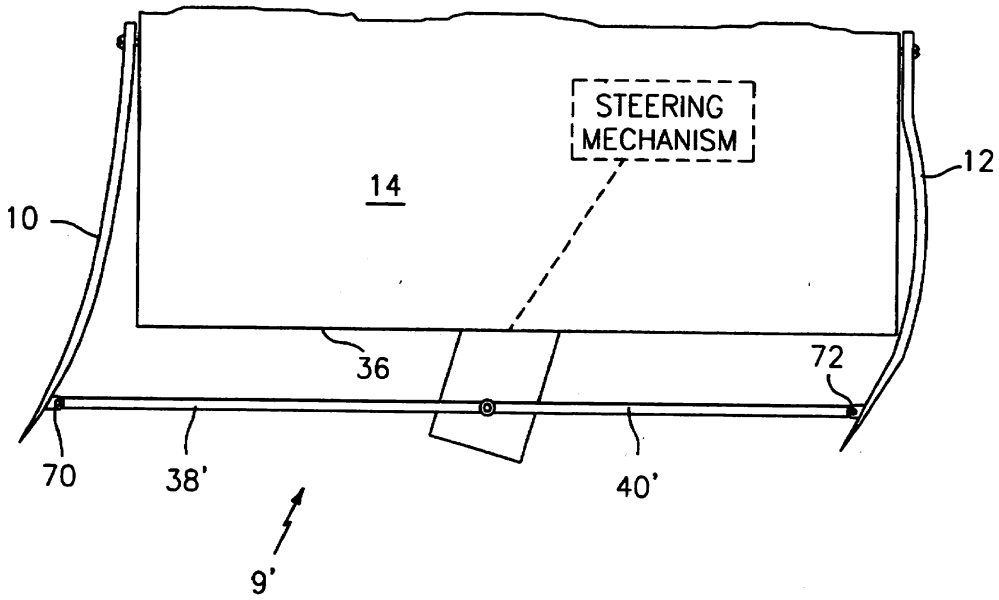
18 Claims, 5 Drawing Sheets