US005724315A

United States Patent [19]

Moffett et al.

[11] Patent Number: 5,724,315

[45] Date of Patent: Mar. 3, 1998

[54] **OMNIDIRECTIONAL ULTRASONIC MICROPROBE HYDROPHONE**

[75] Inventors: **Mark B. Moffett**, Waterford; **James M. Powers**, Norwich, both of Conn.; **Dmitry Chizhik**, Highland Park, N.J.; **Timothy B. Straw**, New London, Conn.

[73] Assignee: **The United States of America as represented by the Secretary of the Navy**, Washington, D.C.

[21] Appl. No.: **655,104**

[22] Filed: **May 29, 1996**

[51] **Int. Cl.**[6] **H04R 1/44**

[52] **U.S. Cl.** **367/153**

[58] **Field of Search** 367/149, 153, 367/155, 157, 165, 173, 180; 310/337, 334

[56] **References Cited**

U.S. PATENT DOCUMENTS

4,316,115	2/1982	Wilson et al.	310/327
4,422,003	12/1983	Safari et al.	310/358
4,433,400	2/1984	Dereggi et al.	367/163
4,672,591	6/1987	Breimesser et al.	367/152
4,841,494	6/1989	Banno	367/157
5,072,426	12/1991	Schafer et al.	367/164
5,137,776	8/1992	Kahn	428/304.4
5,209,119	5/1993	Polla et al.	73/723
5,367,500	11/1994	Ng	367/157

Primary Examiner—Daniel T. Pihulic

Attorney, Agent, or Firm—Michael J. McGowan; Robert W. Gauthier; Prithvi C. Lall

[57] **ABSTRACT**

An omnidirectional ultrasonic microprobe hydrophone is disclosed. Applications include underwater mine detection, explosive shock testing, high wave number measurements, medical imaging, and therapeutic systems. The apparatus includes at least two lead zirconate titanate (PZT) pressure sensing elements having a plurality of columnar voids formed therein. The pressure sensing elements are deposited on a metallic or nonmetallic substrate which provides mechanical support for the microprobe hydrophone. Electrical connection to the pressure sensing elements is made by deposition of conductors and insulators on the substrate material. Wire bonds are used to attach wire leads for connection to a supporting structure containing a preamplifier. Line arrays and planar arrays of microprobe hydrophone elements are also disclosed.
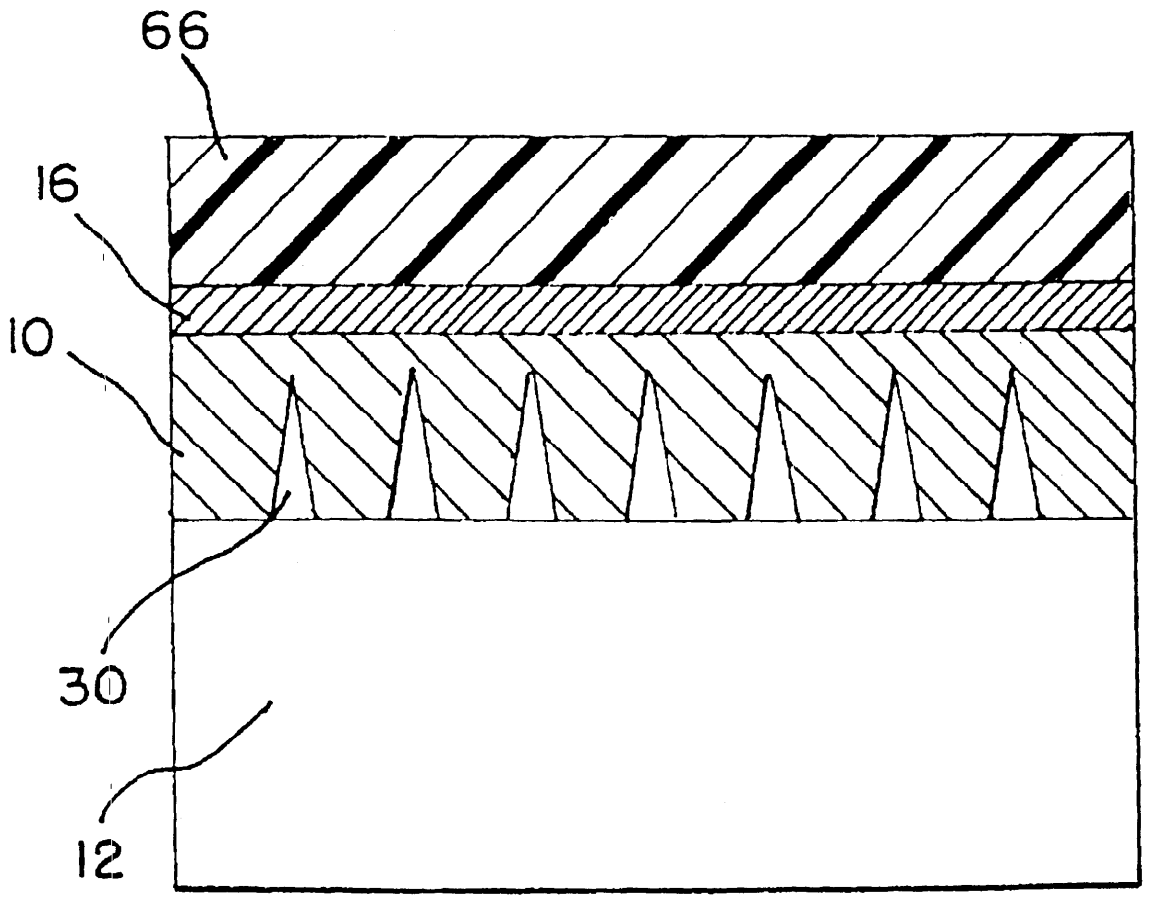
13 Claims, 6 Drawing Sheets