US005705769A

United States Patent [19]

Hanson

[11] Patent Number: 5,705,769

[45] Date of Patent: Jan. 6, 1998

[54] VIBRATIONALLY DAMPED STRUCTURE

[75] Inventor: Jeffrey S. Hanson, Wakefield, R.I.

[73] Assignee: The United States of America as represented by the Secretary of the Navy, Washington, D.C.

[21] Appl. No.: 645,734

[22] Filed: May 14, 1996

[51] Int. Cl.[6] F16F 15/00; B32B 25/04; B63H 21/30

[52] U.S. Cl. 114/20.1; 181/290; 181/292; 181/294; 367/149; 367/151; 367/173; 367/176

[58] Field of Search 114/20.1, 20.2, 114/312, 342; 181/208, 284, 286, 290, 292, 294; 156/71; 367/1, 149, 151, 173, 176

[56] References Cited

U.S. PATENT DOCUMENTS

3,130,700	4/1964	Peterson	114/20.1
4,399,526	8/1983	Eynck	367/149
4,756,264	7/1988	Ewbank	114/20.1
5,106,439	4/1992	Wellings et al.	156/71
5,337,288	8/1994	Sorathia et al.	367/1
5,389,746	2/1995	Moody	181/0.5
5,396,855	3/1995	DuBois	114/20.1

Primary Examiner—Michael J. Carone
Assistant Examiner—Matthew J. Lattig
Attorney, Agent, or Firm—Michael J. McGowan; James M. Kasischke; Prithvi C. Lall

[57] ABSTRACT

A vibrationally damped structure includes a structure that is susceptible to vibrations and a constrained damping layer positioned over at least a portion of the vibrating structure. The constrained damping layer includes a continuous damping layer bonded to the surface of the structure for providing the first reduction of vibrational energy transmitted through the structure. The constrained damping layer further includes a segmented constraining layer bonded to a portion of the continuous damping layer for providing a second reduction of vibrational energy transmitted through the structure and the continuous damping layer. The continuous damping layer preferably includes a layer of elastomeric material bonded to the structure with an epoxy bonding compound or the like. The segmented constraining layer includes a plurality of rigid segments, such as aluminum plates, bonded to the continuous damping layer with a bonding compound. The constrained damping layer can be placed over the shell structure on its interior surface, exterior surface or both surfaces.
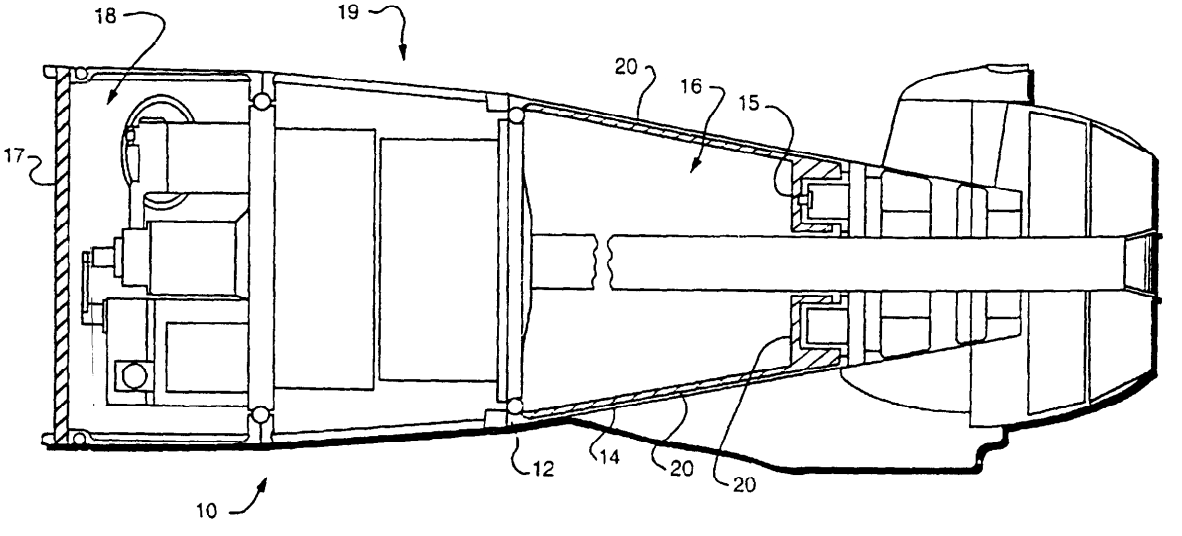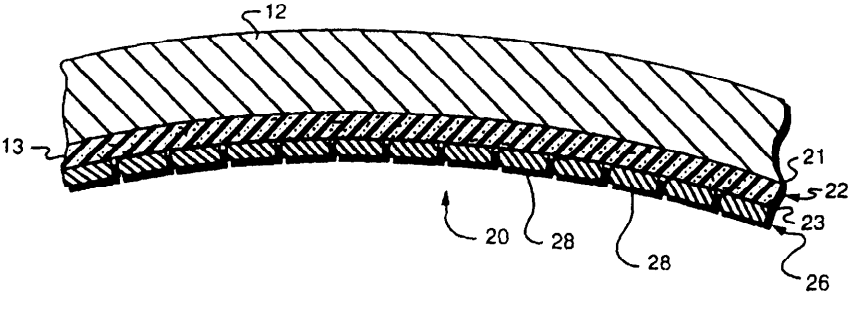
14 Claims, 3 Drawing Sheets