NC 76293

US005661259A

United States Patent [19]

Cipolla

[11] **Patent Number: 5,661,259**

[45] **Date of Patent: Aug. 26, 1997**

[54] **VARIABLE SHAPE CONTROL FIN ASSEMBLY FOR WATER VEHICLES**

[75] Inventor: **Jeffrey L. Cipolla**, Newport, R.I.

[73] Assignee: **The United States of America as represented by the Secretary of the Navy**, Washington, D.C.

[21] Appl. No.: **641,134**

[22] Filed: **Apr. 22, 1996**

[51] **Int. Cl.**[6] **F42B 19/06**

[52] **U.S. Cl.** ..... **114/23**; 114/330; 114/144 R

[58] **Field of Search** ..... 114/23, 20.1, 163, 114/162, 144 R, 274, 280, 282, 330, 331

[56] **References Cited**

U.S. PATENT DOCUMENTS

3,930,626	1/1976	Croswell, Jr.	244/44
4,890,568	1/1990	Dolengowski	114/246
4,941,627	7/1990	Moscrip	244/3.21
5,114,104	5/1992	Cincotta et al.	244/219
5,150,864	9/1992	Roglin et al.	244/219
5,186,420	2/1993	Beauchamp et al.	244/219
5,254,837	10/1993	Grimaldi et al.	219/200
5,366,176	11/1994	Loewy et al.	244/75 R
5,374,011	12/1994	Lazarus et al.	244/75 R
5,440,193	8/1995	Barrett	340/328
5,549,065	8/1996	Cipolla et al.	114/23
5,551,363	9/1996	Cipolla et al.	114/23
5,551,364	9/1996	Cipolla et al.	114/23
5,551,365	9/1996	Cipolla et al.	114/23

Primary Examiner—Michael J. Carone
Assistant Examiner—Christopher K. Montgomery
Attorney, Agent, or Firm—Michael J. McGowan; Michael F. Oglo; Prithvi C. Lall

[57] **ABSTRACT**

A control fin assembly for a water vehicle includes a multiplicity of fins connected together and grouped in an array mounted on the vehicle. A portion of the array is of a shape-memory material responsive to heat to assume selected shapes different from the shape of the array portion otherwise. The array portion is electrically conductive and adapted to increase in temperature upon application of electrical current thereto to effect the assumption of the selected shapes.

The invention further relates to a control fin for a water vehicle, at least a portion of the fin being of a shape-memory material responsive to heat to assume selected shapes different from the shape of the fin otherwise, the fin portion being electrically conductive and adapted to increase in temperature upon application of electrical current thereto to effect the assumption of the selected shapes.
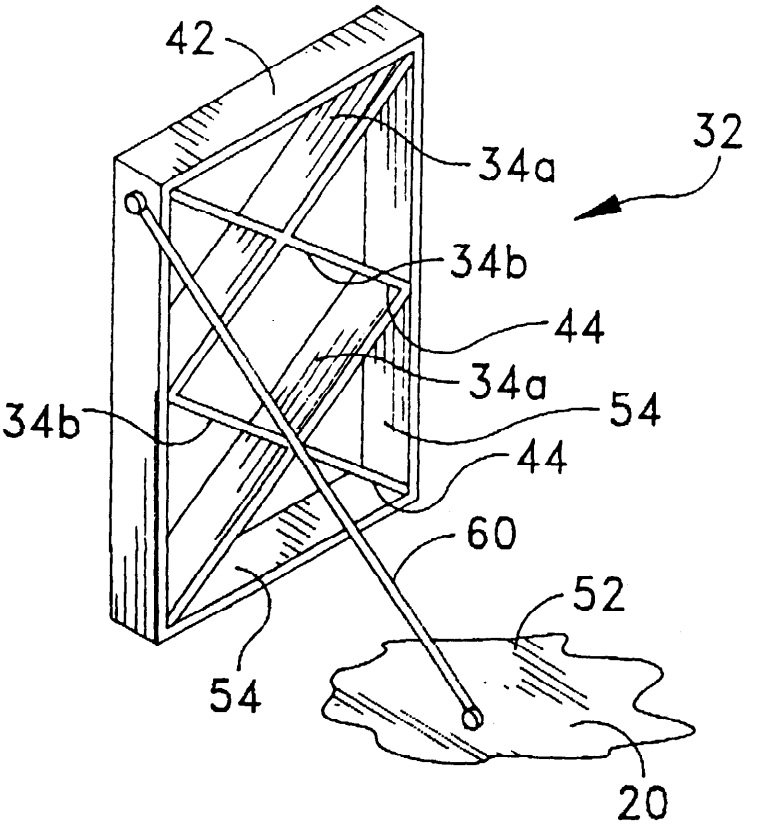
2 Claims, 6 Drawing Sheets