N.C. 74857

US005328141A

United States Patent [19]

Dickinson

[11] **Patent Number: 5,328,141**

[45] **Date of Patent: Jul. 12, 1994**

[54] **SAG COMPENSATED VIBRATION ISOLATION MOUNT**

[75] Inventor: **Stuart C. Dickinson**, Bristol, R.I.

[73] Assignee: **The United States of America as represented by the Secretary of the Navy**, Washington, D.C.

[21] Appl. No.: **100,798**

[22] Filed: **Aug. 2, 1993**

[51] **Int. Cl.**[5] **F16M 13/00**

[52] **U.S. Cl.** **248/550**; 248/632; 248/634; 267/141

[58] **Field of Search** 248/550, 638, 632, 634; 267/140, 141, 141.1, 141.2; 180/300

[56] **References Cited**

U.S. PATENT DOCUMENTS

3,625,501	12/1971	Hein	267/141 X
4,006,505	2/1977	Koster	267/141 X
4,006,892	2/1977	Koeneman	267/141 X
4,195,826	4/1980	Weinke	267/141 X
4,491,304	1/1985	Kakimoto	267/141.2 X
4,765,600	8/1988	Hartel	267/141.1 X
4,790,521	12/1988	Ide	180/300 X
4,817,921	4/1989	Stevenson	248/634 X
4,828,234	5/1989	Hoying	248/550 X
4,844,430	7/1989	Miya	267/141.2 X
5,249,784	10/1993	Murakami	267/140.14 X

FOREIGN PATENT DOCUMENTS

628896	11/1961	Italy	267/141

Primary Examiner—J. Franklin Foss

Attorney, Agent, or Firm—Michael J. McGowan; Prithvi C. Lall; Michael F. Oglo

[57] **ABSTRACT**

A sag-compensated vibration isolation mount includes a cylindrical rubber body element and a circular band extending around the body element. The band is formed from a shape-memory alloy metal which has a predetermined transition temperature. The band is operative for restricting outward bulging and sagging of the body element when the body element is subjected to an axial load at a temperature above the transition temperature. The band has a first length at a temperature above the transition temperature and it is stretchable to a second length at a temperature below the transition temperature. At temperatures below the transition temperature, the body element normally stretches the band to its second length. However, when the band is heated above its transition temperature, the band rapidly decreases in length to its first length to forcibly compress the body element and restrict outward bulging of the body element.
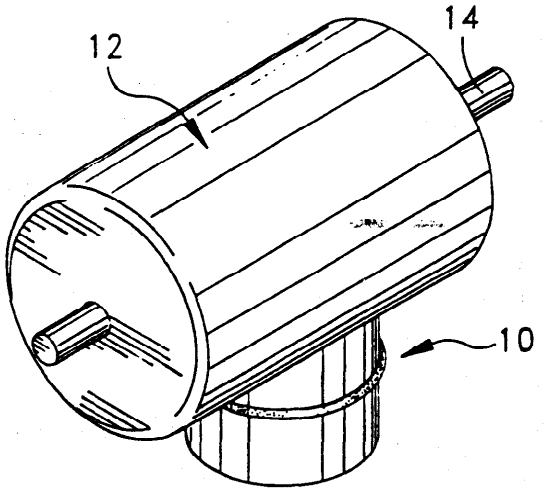
16 Claims, 1 Drawing Sheet